Cat. No. W359-E1-05

CS1W-MC221(-V1)/421(-V1)
Motion Control Units

OPERATION MANUAL

OMRON

CS1W-MC221(-V1)/421(-V1) Motion Control Units

Operation Manual

Revised August 2011

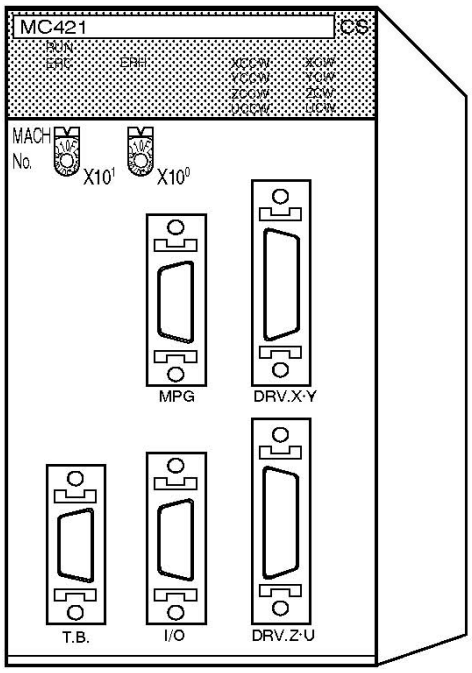

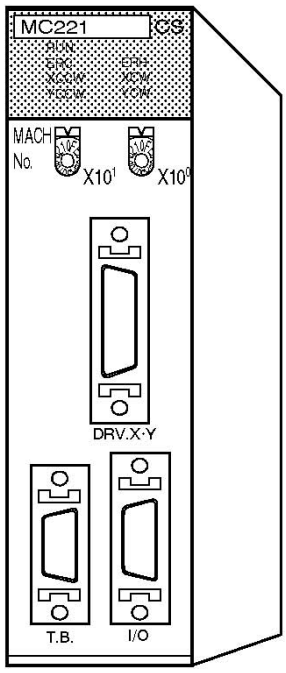

Notice:

OMRON products are manufactured for use according to proper procedures by a qualified operator and only for the purposes described in this manual.

The following conventions are used to indicate and classify precautions in this manual. Always heed the information provided with them. Failure to heed precautions can result in injury to people or damage to property.

⚠DANGER Indicates an imminently hazardous situation which, if not avoided, will result in death or serious injury. Additionally, there may be severe property damage.

⚠WARNING Indicates a potentially hazardous situation which, if not avoided, could result in death or serious injury. Additionally, there may be severe property damage.

⚠Caution Indicates a potentially hazardous situation which, if not avoided, may result in minor or moderate injury, or property damage.

OMRON Product References

All OMRON products are capitalized in this manual. The word “Unit” is also capitalized when it refers to an OMRON product, regardless of whether or not it appears in the proper name of the product.

The abbreviation “Ch,” which appears in some displays and on some OMRON products, often means “word” and is abbreviated “Wd” in documentation in this sense.

The abbreviation “PLC” means Programmable Controller. “PC” is used, however, in some Programming Device displays to mean Programmable Controller.

Visual Aids

The following headings appear in the left column of the manual to help you locate different types of information.

Note Indicates information of particular interest for efficient and convenient operation of the product.

1,2,3... 1. Indicates lists of one sort or another, such as procedures, checklists, etc.

Trademarks and Copyrights

Windows is registered trademarks of the Microsoft Corporation.

Other product names and system names in this manual are trademarks or registered trademarks of their respective companies.

© OMRON, 1999

All rights reserved. No part of this publication may be reproduced, stored in a retrieval system, or transmitted, in any form, or by any means, mechanical, electronic, photocopying, recording, or otherwise, without the prior written permission of OMRON.

No patent liability is assumed with respect to the use of the information contained herein. Moreover, because OMRON is constantly striving to improve its high-quality products, the information contained in this manual is subject to change without notice. Every precaution has been taken in the preparation of this manual. Nevertheless, OMRON assumes no responsibility for errors or omissions. Neither is any liability assumed for damages resulting from the use of the information contained in this publication.

TABLE OF CONTENTS

PRECAUTIONS xxi

1 Intended Audience xxii
2 General Precautions xxii
3 Safety Precautions xxii
4 Operating Environment Precautions xxiii
5 Application Precautions xxiv
6 Conformance to EC Directives xxvi

SECTION 1
Features and System Configuration 1

1-1 Features 2
1-2 System Configuration 4
1-3 Basic Operations 7
1-4 Control System Configuration and Principles 12
1-5 Specifications 16
1-6 Data Exchange 26
1-7 Overview of G-language Programs in the MC Unit 30
1-8 Commands Listed According to Purpose 37
1-9 Comparison with Earlier MC Unit Model 38
1-10 Basic Operating Procedure 42
1-11 Methods for Using MC Unit Functions 43
1-12 Overview of Version 1 Upgrades 45

SECTION 2
Installation 101

2-1 Nomenclature and Unit Settings 102
2-2 Installation 104
2-3 Wiring 107
2-4 Failsafe Circuits 133
2-5 Wiring Check Troubleshooting 139
2-6 Changing the Mechanical Direction of Operation 141
2-7 Connecting Peripheral Devices 142

SECTION 3
MC Unit Internal Data Configuration 147

3-1 Data Configuration 148
3-2 Determining the Task Configuration 149
3-3 System Parameters 151
3-4 Position Data 187
3-5 Monitor Data 189
3-6 Command Area 196

TABLE OF CONTENTS

SECTION 4
Data Transfer and Storage. 201

4-1 Data Transfer and Storage: Overview 202
4-2 IOWR and IORD Specifications 209
4-3 Saving Data 221

SECTION 5
Exchanging Data with the CPU Unit 223

5-1 Overall Structure 224
5-2 Controlling the MC Unit from the CPU Unit 228
5-3 PLC Interface Area 237
5-4 Interface Specifics 260

SECTION 6
Basic Positioning Operations 325

6-1 Overview 326
6-2 PTP Control 327
6-3 Linear Interpolation 328
6-4 Circular Interpolation. 331
6-5 Helical Circular Interpolation 332
6-6 Interrupt Feeding 334
6-7 Traverse Function 336
6-8 Operating Modes 337
6-9 Changing Parameters 345
6-10 Stopover Function 346
6-11 CPU Unit Interrupt Processing 348
6-12 Override Function 349
6-13 Resetting the Error Counter 351
6-14 Servo Lock and Unlock 353
6-15 Backlash Correction. 356
6-16 Automatic Loading 359
6-17 Present Position Preset. 363
6-18 Electronic Gear Function 365
6-19 Acceleration and Deceleration Curves 369
6-20 Unlimited Feeding 370
6-21 Stopping 372

SECTION 7
G-language Programming 375

7-1 Programs and Tasks 376
7-2 G Language Overview 377
7-3 G-language Commands 384
7-4 M Code Outputs. 431

TABLE OF CONTENTS

SECTION 8
G-Language Programming Examples 445

8-1 Programming Examples 446
8-2 Executing MC Programs from the Ladder Program 462

SECTION 9
Establishing the Origin 465

9-1 Overview 466
9-2 Input Signals Required for an Origin Search 468
9-3 Origin Search Methods and Parameters 468
9-4 Origin Search Operations 470
9-5 Absolute Encoders 479
9-6 Setting the Origin With an Absolute Encoder 480
9-7 Absolute Encoder Interface Specifications 483

SECTION 10
Teaching 487

10-1 Introduction 488
10-2 Setting the Teaching Address 488
10-3 Performing Teaching 490
10-4 Errors during Teaching 492

SECTION 11
Getting Started 495

11-1 Operation Details 496
11-2 System Configuration and Wiring 498
11-3 Considerations When Starting Up the MC Unit 518

SECTION 12
Troubleshooting 521

12-1 Troubleshooting Tables 522
12-2 Error Indicators 531
12-3 System Error Codes 532
12-4 Task Error Codes 536
12-5 Axis Error Codes 541
12-6 Error Log 546

SECTION 13
Maintenance and Inspection 549

13-1 Routine Inspections 550

TABLE OF CONTENTS

Appendices

A Performance 553
B G-language Codes 563
C PLC Interface Area Lists 565
D System Parameters 589
E Control Bit/Flag Timing Charts 613
F Origin Search Patterns 629
G Encoder Divider Rate and Rotation Speed for OMRON Servo Drivers 657
H MC Program Coding Sheet 659
I System Parameter Settings 661
J Position Data Coding Sheet 667

Index. 669

Revision History 677

About this Manual:

This manual describes the features, specifications, and operation of the CS1W-MC421/221 Motion Control Unit and includes the sections described below.

Please read this manual and the other manuals related to the CS1W-MC421/221 Motion Control Unit carefully and be sure you understand the information provided before attempting to install and operate the Motion Control Unit.

Refer to *1-12 Overview of Version 1 Upgrades* for an outline of the new features added to the CS1W-MC421-V1 and CS1W-MC221-V1. ("-V1" is omitted in this manual.)

Section 1 explains the features and system configuration of the CS1W-MC421 and CS1W-MC221 Motion Control Units (MC Units), and outlines some of the differences with the features of the earlier C200H-MC221 MC Unit.

Section 2 describes the MC Unit components and provides the information required for installing the MC Unit.

Section 3 describes the data contained within the MC Unit.

Section 4 describes the means used to store data of various types and explains how data is transferred between the MC Unit and the CPU Unit.

Section 5 describes the ways in which data can be transferred between the CPU Unit and the MC Unit, including using the IOWR/IORD instructions, using the PLC Interface Area, and using dedicated bits/flags in memory.

Section 6 explains the basic positioning operations executed by the MC Unit.

Section 7 describes using the G language to program motion control in the MC Unit.

Section 8 provides examples of G-language programming for the CS1W-MC421/221.

Section 9 explains how to search for and establish the origin using either an incremental encoder or an absolute encoder, and gives a general overview of absolute encoders.

Section 10 describes the teaching function. This function can be used to teach new positions by moving to a given position and then reading the present position of each axis as position data.

Section 11 explains how to get started using the MC Unit. It provides information on the MC Unit's startup procedures, system configuration, wiring, creating I/O tables, inputting MC programs, creating ladder programs, transferring data, saving data, and conducting trial operation.

Section 12 explains the troubleshooting procedures to be employed if problems should occur in MC Unit operation.

Section 13 explains the maintenance and inspection procedures that must be followed to keep the MC Unit operating in optimum condition. It includes instructions on the proper procedure to follow when replacing an MC Unit, and precautions to observe when replacing a Servomotor.

The ***Appendices*** provide MC Unit performance information, control bit/flag timing charts, MC program coding sheet, sheets for recording system parameter settings, and position data coding sheet.

> ⚠ **WARNING** Failure to read and understand the information provided in this manual may result in personal injury or death, damage to the product, or product failure. Please read each section in its entirety and be sure you understand the information provided in the section and related sections before attempting any of the procedures or operations given.

Unit Versions

A “unit version” has been introduced to manage Motion Control Units according to differences in functionality accompanying Unit upgrades.

Notation of Unit Versions on Products

The unit version is given to the right of the lot number on the nameplate of the products for which unit versions are being managed, as shown below.

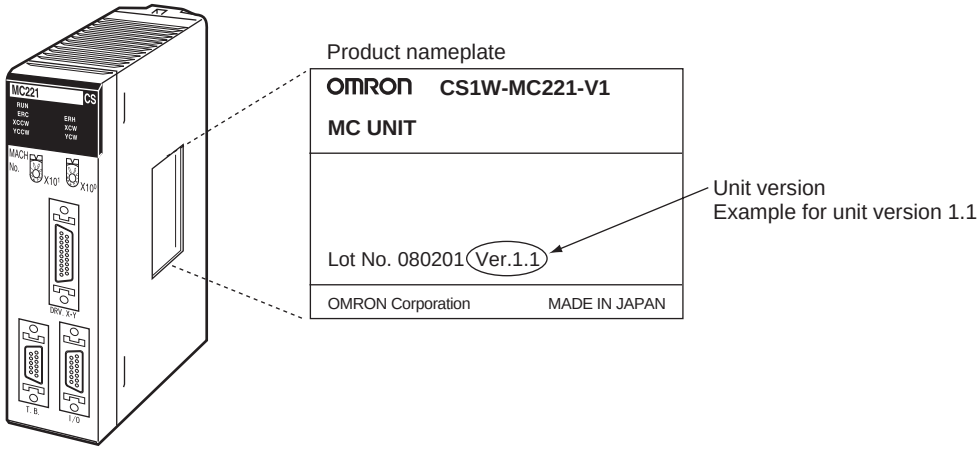

The unit versions of Motion Control Units start with unit version 1.1.

Confirming Unit Versions with Support Software

CX-Programmer version 4.0 or higher can be used to confirm the unit version using the ***Unit Manufacturing Information***.

1,2,3...

1. In the *IO Table* Window, right-click the Motion Control Unit and select ***Unit Manufacturing information.***
2. The following *Unit Manufacturing information* Dialog Box will be displayed.

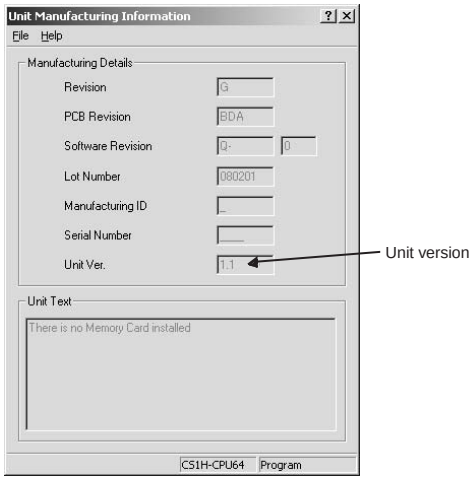

The unit version is displayed as *1.1* in the *Unit Version Number* field of the above example. Use this display to confirm the unit version of the Motion Control Unit connected online.

Using the Unit Version Label

A unit version label is provided with the Motion Control Unit. This label can be attached to the front of the Motion Control Unit to differentiate between Motion Control Units with different unit versions.

■ Unit Version Notation

Unit versions are given in this manual as shown in the following table.

Product label	Notation in this manual	Remarks
The version number is given to the right of the lot number for unit versions 1.1 and later, e.g., “Ver. 1.1”	CS-series Motion Control Unit with unit version 1.1 or later	The contents of this manual applies to all unit version whenever the unit version is not specified.
No version number is given to the right of the lot number for unit versions earlier than 1.1.	Pre-Ver. 1.1 CS-series Motion Control Unit	

■ Functions Supported According to Unit Versions of Motion Control Units

Unit version	Pre-Ver. 1.1 Units	Units with unit version 1.1
Internal system version	Versions 1.01 to 3.01	Version 3.02
Absolute encoder functionality for OMNUC G-series Servo Drivers	Not supported.	Supported.

Version Upgrade Information

Improvements from Pre-Ver. 1.1 to Version 1.1

The following improvements have been made.

Pre-Ver. 1.1	Ver. 1.1
The absolute encoder functionality for OMNUC G-series Servo Drivers is not supported.	The absolute encoder functionality for OMNUC G-series Servo Drivers is supported.

Read and Understand this Manual

Please read and understand this manual before using the product. Please consult your OMRON representative if you have any questions or comments.

Warranty and Limitations of Liability

WARRANTY

OMRON's exclusive warranty is that the products are free from defects in materials and workmanship for a period of one year (or other period if specified) from date of sale by OMRON.

OMRON MAKES NO WARRANTY OR REPRESENTATION, EXPRESS OR IMPLIED, REGARDING NON-INFRINGEMENT, MERCHANTABILITY, OR FITNESS FOR PARTICULAR PURPOSE OF THE PRODUCTS. ANY BUYER OR USER ACKNOWLEDGES THAT THE BUYER OR USER ALONE HAS DETERMINED THAT THE PRODUCTS WILL SUITABLY MEET THE REQUIREMENTS OF THEIR INTENDED USE. OMRON DISCLAIMS ALL OTHER WARRANTIES, EXPRESS OR IMPLIED.

LIMITATIONS OF LIABILITY

OMRON SHALL NOT BE RESPONSIBLE FOR SPECIAL, INDIRECT, OR CONSEQUENTIAL DAMAGES, LOSS OF PROFITS OR COMMERCIAL LOSS IN ANY WAY CONNECTED WITH THE PRODUCTS, WHETHER SUCH CLAIM IS BASED ON CONTRACT, WARRANTY, NEGLIGENCE, OR STRICT LIABILITY.

In no event shall the responsibility of OMRON for any act exceed the individual price of the product on which liability is asserted.

IN NO EVENT SHALL OMRON BE RESPONSIBLE FOR WARRANTY, REPAIR, OR OTHER CLAIMS REGARDING THE PRODUCTS UNLESS OMRON'S ANALYSIS CONFIRMS THAT THE PRODUCTS WERE PROPERLY HANDLED, STORED, INSTALLED, AND MAINTAINED AND NOT SUBJECT TO CONTAMINATION, ABUSE, MISUSE, OR INAPPROPRIATE MODIFICATION OR REPAIR.

Application Considerations

SUITABILITY FOR USE

OMRON shall not be responsible for conformity with any standards, codes, or regulations that apply to the combination of products in the customer's application or use of the products.

At the customer's request, OMRON will provide applicable third party certification documents identifying ratings and limitations of use that apply to the products. This information by itself is not sufficient for a complete determination of the suitability of the products in combination with the end product, machine, system, or other application or use.

The following are some examples of applications for which particular attention must be given. This is not intended to be an exhaustive list of all possible uses of the products, nor is it intended to imply that the uses listed may be suitable for the products:

- Outdoor use, uses involving potential chemical contamination or electrical interference, or conditions or uses not described in this manual.
- Nuclear energy control systems, combustion systems, railroad systems, aviation systems, medical equipment, amusement machines, vehicles, safety equipment, and installations subject to separate industry or government regulations.
- Systems, machines, and equipment that could present a risk to life or property.

Please know and observe all prohibitions of use applicable to the products.

NEVER USE THE PRODUCTS FOR AN APPLICATION INVOLVING SERIOUS RISK TO LIFE OR PROPERTY WITHOUT ENSURING THAT THE SYSTEM AS A WHOLE HAS BEEN DESIGNED TO ADDRESS THE RISKS, AND THAT THE OMRON PRODUCTS ARE PROPERLY RATED AND INSTALLED FOR THE INTENDED USE WITHIN THE OVERALL EQUIPMENT OR SYSTEM.

PROGRAMMABLE PRODUCTS

OMRON shall not be responsible for the user's programming of a programmable product, or any consequence thereof.

Disclaimers

CHANGE IN SPECIFICATIONS

Product specifications and accessories may be changed at any time based on improvements and other reasons.

It is our practice to change model numbers when published ratings or features are changed, or when significant construction changes are made. However, some specifications of the products may be changed without any notice. When in doubt, special model numbers may be assigned to fix or establish key specifications for your application on your request. Please consult with your OMRON representative at any time to confirm actual specifications of purchased products.

DIMENSIONS AND WEIGHTS

Dimensions and weights are nominal and are not to be used for manufacturing purposes, even when tolerances are shown.

PERFORMANCE DATA

Performance data given in this manual is provided as a guide for the user in determining suitability and does not constitute a warranty. It may represent the result of OMRON's test conditions, and the users must correlate it to actual application requirements. Actual performance is subject to the OMRON Warranty and Limitations of Liability.

ERRORS AND OMISSIONS

The information in this manual has been carefully checked and is believed to be accurate; however, no responsibility is assumed for clerical, typographical, or proofreading errors, or omissions.

PRECAUTIONS

This section provides general precautions for using the Motion Control Units (MC Units) and related devices.

The information contained in this section is important for the safe and reliable application of the Motion Control Unit. You must read this section and understand the information contained before attempting to set up or operate a Motion Control Unit.

1 Intended Audience xxii
2 General Precautions xxii
3 Safety Precautions xxii
4 Operating Environment Precautions xxiii
5 Application Precautions xxiv
6 Conformance to EC Directives xxvi
6-1 Applicable Directives xxvi
6-1-1 Concepts xxvi
6-1-2 Conformance to EC Directives xxvi

1 Intended Audience

This manual is intended for the following personnel, who must also have knowledge of electrical systems (an electrical engineer or the equivalent).

- Personnel in charge of installing FA systems.
- Personnel in charge of designing FA systems.
- Personnel in charge of managing FA systems and facilities.

2 General Precautions

The user must operate the product according to the performance specifications described in the operation manuals.

Before using the product under conditions which are not described in the manual or applying the product to nuclear control systems, railroad systems, aviation systems, vehicles, combustion systems, medical equipment, amusement machines, safety equipment, and other systems, machines, and equipment that may have a serious influence on lives and property if used improperly, consult your OMRON representative.

Make sure that the ratings and performance characteristics of the product are sufficient for the systems, machines, and equipment, and be sure to provide the systems, machines, and equipment with double safety mechanisms.

This manual provides information for using the MC Unit. Be sure to read this manual before attempting to use the Unit and keep this manual close at hand for reference during operation.

⚠WARNING It is extreme important that Motion Control Units and related devices be used for the specified purpose and under the specified conditions, especially in applications that can directly or indirectly affect human life. You must consult with your OMRON representative before applying Motion Control Units and related devices to the above mentioned applications.

3 Safety Precautions

⚠WARNING Never attempt to disassemble any Units while power is being supplied. Doing so may result in serious electrical shock or electrocution.

⚠WARNING Never touch any of the terminals while power is being supplied. Doing so may result in serious electrical shock or electrocution.

⚠WARNING Provide safety measures in external circuits (i.e., not in the Programmable Controller or MC Unit) to ensure safety in the system if an abnormality occurs due to malfunction of the CPU Unit, malfunction of the MC Unit, or external factors affecting the operation of the CPU Unit or MC Unit. Not providing sufficient safety measures may result in serious accidents.

- Emergency stop circuits, interlock circuits, limit circuits, and similar safety measures must be provided in external control circuits.
- The CPU Unit will turn OFF all outputs when its self-diagnosis function detects any error or when a severe failure alarm (FALS) instruction is executed. As a countermeasure for such errors, external safety measures must be provided to ensure safety in the system.

- The CPU Unit or MC Unit outputs may remain ON or OFF due to deposits on or burning of the output relays, or destruction of the output transistors. As a countermeasure for such problems, external safety measures must be provided to ensure safety in the system.
- When the 24-VDC output (service power supply to the CPU Unit) is overloaded or short-circuited, the voltage may drop and result in the outputs being turned OFF. As a countermeasure for such problems, external safety measures must be provided to ensure safety in the system.

⚠ **Caution** Execute online edit only after confirming that no adverse effects will be caused by extending the cycle time. Otherwise, the input signals may not be readable.

⚠ **Caution** Confirm the safety of the destination node before transferring a program to the node or changing the contents of I/O memory. Doing either of these without confirming safety may result in injury.

⚠ **Caution** Connect the RUN command output (RUN signal) to the Servo Driver. Otherwise, the motor may run when the power is turned ON or OFF or when en error occurs in the Unit.

⚠ **Caution** Do not save data into the flash memory during program execution or while the motor is running. Otherwise, unexpected operation may be caused.

⚠ **Caution** Do not reverse the polarity of the 24-V power supply. The polarity must be correct. Otherwise, the motor may start running unexpectedly and may not stop.

4 Operating Environment Precautions

⚠ **Caution** Do not operate the control system in the following locations:

- Locations subject to direct sunlight.
- Locations subject to temperatures or humidity outside the range specified in the specifications.
- Locations subject to condensation as the result of severe changes in temperature.
- Locations subject to corrosive or flammable gases.
- Locations subject to dust (especially iron dust) or salts.
- Locations subject to exposure to water, oil, or chemicals.
- Locations subject to shock or vibration.

⚠ **Caution** Take appropriate and sufficient countermeasures when installing systems in the following locations:

- Locations subject to static electricity or other forms of noise.
- Locations subject to strong electromagnetic fields.
- Locations subject to possible exposure to radioactivity.
- Locations close to power supplies.

⚠Caution The operating environment of the PLC System can have a large effect on the longevity and reliability of the system. Improper operating environments can lead to malfunction, failure, and other unforeseeable problems with the PLC System. Be sure that the operating environment is within the specified conditions at installation and remains within the specified conditions during the life of the system.

5 Application Precautions

Observe the following precautions when using the MC Unit or the CPU Unit.

⚠WARNING Failure to abide by the following precautions could lead to serious or possibly fatal injury. Always heed these precautions.

- Always ground the system to 100 Ω or less when installing the system to protect against electrical shock.
- Always turn OFF the power supply to the Unit before attempting any of the following. Not turning OFF the power supply may result in malfunction or electric shock.
  - Mounting or dismounting the MC Unit or any other Units.
  - Assembling the Units.
  - Setting rotary switches.
  - Connecting cables or wiring the system.
  - Connecting or disconnecting the connectors.

⚠Caution Failure to abide by the following precautions may lead to faulty operation of the CPU Unit, the MC Unit. or the system, or could damage the CPU Unit or MC Unit. Always heed these precautions.

- Check the task configuration before creating MC program for the MC Unit. Set the task configuration (axis configuration, number of tasks, and task axis definition) using the unit parameters within the system parameters. If changes are made to the task configuration, the MC program must be changed as well.
- After transferring the system parameters, G-language program, or position data to the MC Unit, be sure to save the data in flash memory within the MC Unit (using the data save command from the CX-Motion or CPU Unit) before turning OFF the power supply to the Unit. Transferring the data to the MC Unit will simply save the data in the internal memory (S-RAM) of the MC Unit and this data will be deleted when the power supply to the Unit is turned OFF.
- After transferring the system parameter data to the MC Unit and saving the data to flash memory, be sure to reset the power supply to the Unit or restart the Unit. Otherwise, the unit parameters and machine parameters will not be changed and the System Set Error, which can occur when the system parameters are transferred to the MC Unit, will not be cleared.
- Do not turn OFF the power supply to the Unit while data is being written to flash memory. Doing so may cause problems with the flash memory.
- Confirm that no adverse effects will occur in the system before changing the operating mode of the Teaching Box.
- When a wiring error occurs, be sure to reset the power supply to the Unit, check the wiring, and reset the machine parameters within the system parameters.

- Confirm that no adverse effect will occur in the system before attempting any of the following. Not doing so may result in an unexpected operation.
  - Changing the operating mode of the CPU Unit (including the setting of the startup operating mode).
  - Changing the present value of any word or any set value in memory.
  - Force-setting/force-resetting any bit in memory.
- Install external breakers and take other safety measures against short-circuiting in external wiring. Insufficient safety measures against short-circuiting may result in burning.
- Be sure that all the mounting screws, terminal screws, and cable connector screws are tightened to the torque specified in this manual. Incorrect tightening torque may result in malfunction.
- Tighten the mounting screws at the bottom of the Unit to a torque of 0.4 N • m. Incorrect tightening torque may result in malfunction.
- Before touching the Unit, be sure to first touch a grounded metallic object in order to discharge any static built-up. Not doing so may result in malfunction or damage.
- Check the pin numbers before wiring the connectors.
- Be sure that the connectors, terminal blocks, I/O cables, cables between drivers, and other items with locking devices are properly locked into place. Improper locking may result in malfunction.
- Always use the power supply voltages specified in this manual. An incorrect voltage may result in malfunction or burning.
- Take appropriate measures to ensure that the specified power with the rated voltage and frequency is supplied. Be particularly careful in places where the power supply is unstable. An incorrect power supply may result in malfunction.
- Use crimp terminals for wiring. Do not connect bare stranded wires directly to terminals. Connection of bare stranded wires may result in burning.
- Leave the label attached to the Unit when wiring. Removing the label may result in malfunction if foreign matter enters the Unit.
- Remove the label after the completion of wiring to ensure proper heat dissipation. Leaving the label attached may result in malfunction.
- Do not apply voltages to the Input Units in excess of the rated input voltage. Excess voltages may result in burning.
- Do not apply voltages or connect loads to the Output Units in excess of the maximum switching capacity. Excess voltage or loads may result in burning.
- Separate the line ground terminal (LG) from the functional ground terminal (GR) on the Power Supply Unit before performing withstand voltage tests or insulation resistance tests. Not doing so may result in burning.
- Double-check all wiring and switch settings before turning ON the power supply. Incorrect wiring may result in burning.
- Do not pull on the cables or bend the cables beyond their natural limit. Doing either of these may break the cables.
- Do not place objects on top of the cables or other wiring lines. Doing so may break the cables.
- Resume operation only after transferring to the new MC Unit the contents of the parameters, position data, and other data required for resuming operation. Not doing so may result in an unexpected operation.

- Resume operation only after transferring to the new CPU Unit the contents of the DM Area, HR Area, and other data required for resuming operation. Not doing so may result in an unexpected operation.
- Confirm that set parameters and data operate properly.
- Check the user program for proper execution before actually running it on the Unit. Not checking the program may result in an unexpected operation.
- Do not attempt to take any Units apart, to repair any Units, or to modify any Units in any way.
- Perform wiring according to specified procedures.

6 Conformance to EC Directives

6-1 Applicable Directives

- EMC Directives
- Low Voltage Directive

6-1-1 Concepts

EMC Directives

OMRON devices that comply with EC Directives also conform to the related EMC standards so that they can be more easily built into other devices or machines. The actual products have been checked for conformity to EMC standards (see the following note). Whether the products conform to the standards in the system used by the customer, however, must be checked by the customer.

EMC-related performance of the OMRON devices that comply with EC Directives will vary depending on the configuration, wiring, and other conditions of the equipment or control panel in which the OMRON devices are installed. The customer must, therefore, perform final checks to confirm that devices and the overall machine conform to EMC standards.

Note Applicable EMC (Electromagnetic Compatibility) standards are as follows:

EMS (Electromagnetic Susceptibility): EN61131-2
EMI (Electromagnetic Interference): EN61000-6-4
(Radiated emission: 10-m regulations)

Low Voltage Directive

Always ensure that devices operating at voltages of 50 to 1,000 VAC or 75 to 1,500 VDC meet the required safety standards for the PLC (EN61131-2).

6-1-2 Conformance to EC Directives

The CS-series PLCs comply with EC Directives. To ensure that the machine or device in which a CS-series PLC is used complies with EC directives, the PLC must be installed as follows:

1,2,3...

1. The PLC must be installed within a control panel.
2. Reinforced insulation or double insulation must be used for the DC power supplies used for the communications and I/O power supplies.
3. PLCs complying with EC Directives also conform to the Common Emission Standard (EN61000-6-4). When a PLC is built into a machine, however, noise can be generated by switching devices using relay outputs and cause the overall machine to fail to meet the Standards. If this occurs,

surge killers must be connected or other measures taken external to the PLC.

The following methods represent typical methods for reducing noise, and may not be sufficient in all cases. Required countermeasures will vary depending on the devices connected to the control panel, wiring, the configuration of the system, and other conditions.

SECTION 1
Features and System Configuration

This section explains the features and system configuration of the CS1W-MC421 and CS1W-MC221 Motion Control Units (MC Units), and outlines some of the differences with the features of the earlier C200H-MC221 MC Unit.

1-1 Features . . . 2
1-1-1 Overview . . . 2
1-1-2 Description of Features . . . 3
1-2 System Configuration . . . 4
1-2-1 System Configuration Example (CS1W-MC421) . . . 4
1-3 Basic Operations . . . 7
1-3-1 Motion Control . . . 8
1-3-2 Other Functions . . . 10
1-3-3 Summary of Function . . . 11
1-4 Control System Configuration and Principles . . . 12
1-4-1 Servo System . . . 12
1-4-2 Feedback Pulses . . . 15
1-4-3 CW and CCW . . . 15
1-5 Specifications . . . 16
1-5-1 Overview of Operations . . . 21
1-5-2 Performance Chart . . . 23
1-5-3 CX-Motion Functions . . . 24
1-5-4 Teaching Box Functions . . . 25
1-6 Data Exchange . . . 26
1-6-1 Overall Structure . . . 26
1-6-2 Explanation . . . 27
1-6-3 Internal Block Diagram . . . 28
1-6-4 Data Transfer Overview . . . 29
1-7 Overview of G-language Programs in the MC Unit . . . 30
1-7-1 Programs and Tasks . . . 30
1-7-2 Manual and Automatic Operation . . . 32
1-7-3 G Language . . . 33
1-7-4 G-language Codes . . . 35
1-8 Commands Listed According to Purpose . . . 37
1-9 Comparison with Earlier MC Unit Model . . . 38
1-9-1 Changing From the C200H-MC221 to the CS1W-MC421/MC221 . . . 40
1-10 Basic Operating Procedure . . . 42
1-11 Methods for Using MC Unit Functions . . . 43
1-12 Overview of Version 1 Upgrades . . . 45
1-12-1 Using Customized Functions . . . 48
1-12-2 Easy Backup Function . . . 97

1-1 Features

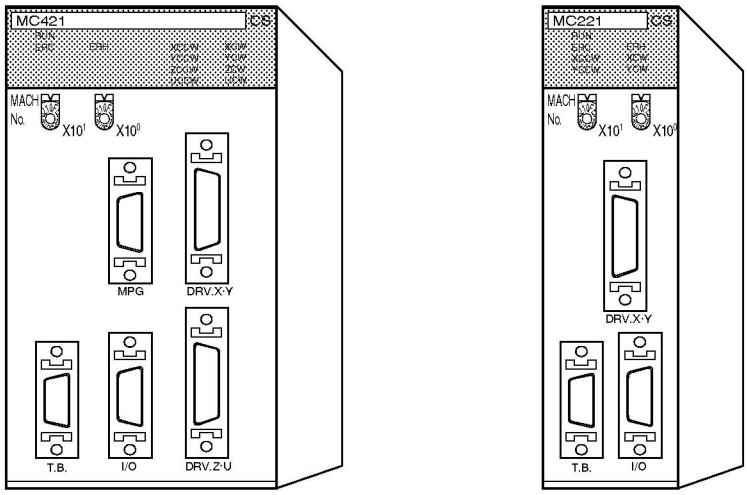

1-1-1 Overview

The CS1W-MC421 and CS1W-MC221 are CS-series Motion Control Units that can control four axes and two axes, respectively. With their internal G-language programming, they can be used for advanced motion control operations, such as traversing, and their multi-tasking capability allows operations to be performed independently for each axis.

Two types of motion control are possible: point-to-point and continuous path.

Point-to-point Control

With point-to-point (PTP) control, positioning is controlled independently for each axis. The pathway varies according to the travel distances, the feed rates, and so on, that are set.

Continuous Path Control

With continuous path (CP) control, not only the start position and target position can be controlled but also the path between those points. Linear interpolation, circular interpolation, helical circular interpolation, and traversing are all possible.

The MC Unit has been developed for use in simple positioning applications using servomotors. Applicable machines are as follows:

- Conveyor Systems: X/Y tables, palletizers/depalletizers, loaders/unloaders, etc. (Palletizers and depalletizers are devices used for loading goods onto pallets or for unloading them from pallets. Loaders and unloaders are devices that have shelves corresponding with the steps of a multistep press and used for inserting or removing all the materials at one time.)
- Assembling Systems: Simple robots (including orthogonal robots), simple automated assembling machines (such as coil winding, polishing, hole punching), etc.

Note The MC Unit is not designed to perform linear interpolation, circular interpolation, or helical circular interpolation with horizontal articulated robots or cylindrical robots, because it does not support coordinate conversions. The MC Unit can, however, perform PTP control with these robots.

1-1-2 Description of Features

Multi-tasking G Language

The MC Unit is provided with a multi-tasking G language, which is the optimum language for motion control. The G language makes it simple to create programs for multi-axis control, without placing a burden on the CPU Unit's ladder diagram program.

Simple and Fast Traverse Operations

Commands for 2-axis traverse operations enable simple and fast traverse operations.

Fast Pick-and-place Operations

After a positioning command has been output, the in-position check OFF function allows the next positioning operation to be started without waiting for the first positioning operation to be completed. This makes it possible to perform high-speed pick-and-place operations.

Supports Absolute Encoders

The MC Unit is compatible with absolute encoders (such as the OMNUC W Series) as a standard feature, eliminating the need to perform an origin search. Incremental encoders can be used as well.

High-speed Response to Start Commands from CPU Unit

The response time from when a start command is received from the CPU Unit until the command voltage is output from the MC Unit is 8 ms for two axes and 12 ms for four axes (MC421 only). This is 1.5 times faster than the previous models.

Two-axis MC Unit

This function applies to the X axis when a 2-axis, 1-task configuration is used.

Four-axis MC Unit

This function applies to the X axis when a 4-axis, 1-task configuration is used.

500-kp/s Encoder Response Frequency

The maximum feedback encoder response frequency is 500 kp/s, so the MC Unit can be used with high-speed and high-precision servomotors. This is double the response frequency of the earlier models.

CPU Unit Interrupts

A CPU Unit external interrupt task can be started by outputting a D code (interrupt code) for the CPU Unit when positioning is completed or when passing through a particular position. This feature is ideal for high-speed synchronization between the MC Unit and CPU Unit.

Windows-based MC Support Software

Single-port Multi-access Function

A Windows-based Support Software package called CX-Motion can be used on the same computer and through the same port as the CX-Programmer, enabling multiple programming environments on a single computer.

Servo Information Trace Function

Speed reference values, the present speed, and the error counter can be traced with specified starting conditions and a specified sampling period using the MC Support Software. Up to 500 items can be traced, making it easy to adjust the servo system.

Automatic Loading Function

When it is necessary to use more programs or position data than can be stored in the MC Unit, programs or position data stored in an external memory device at the computer where the MC Support Software is installed can be automatically downloaded to the MC Unit's internal memory.

Data Creation Using Teaching Box

In addition to entering numbers in the Position Data Edit Window of the MC Support Software (CX-Motion), it is possible to create position data by using the Teaching Box to teach positions while actually moving the machinery.

Operate with MPG

Positioning and simple sync operations can be performed using an MPG (manual pulse generator).

Motor Driver Connection Cables Cables are provided for connecting to the motor driver.

1-2 System Configuration

The MC Unit receives control signals (CW limit, CCW limit, origin proximity, and emergency stop input signals) from the Rack and control panel, and outputs command voltages to the servo driver.

1-2-1 System Configuration Example (CS1W-MC421)

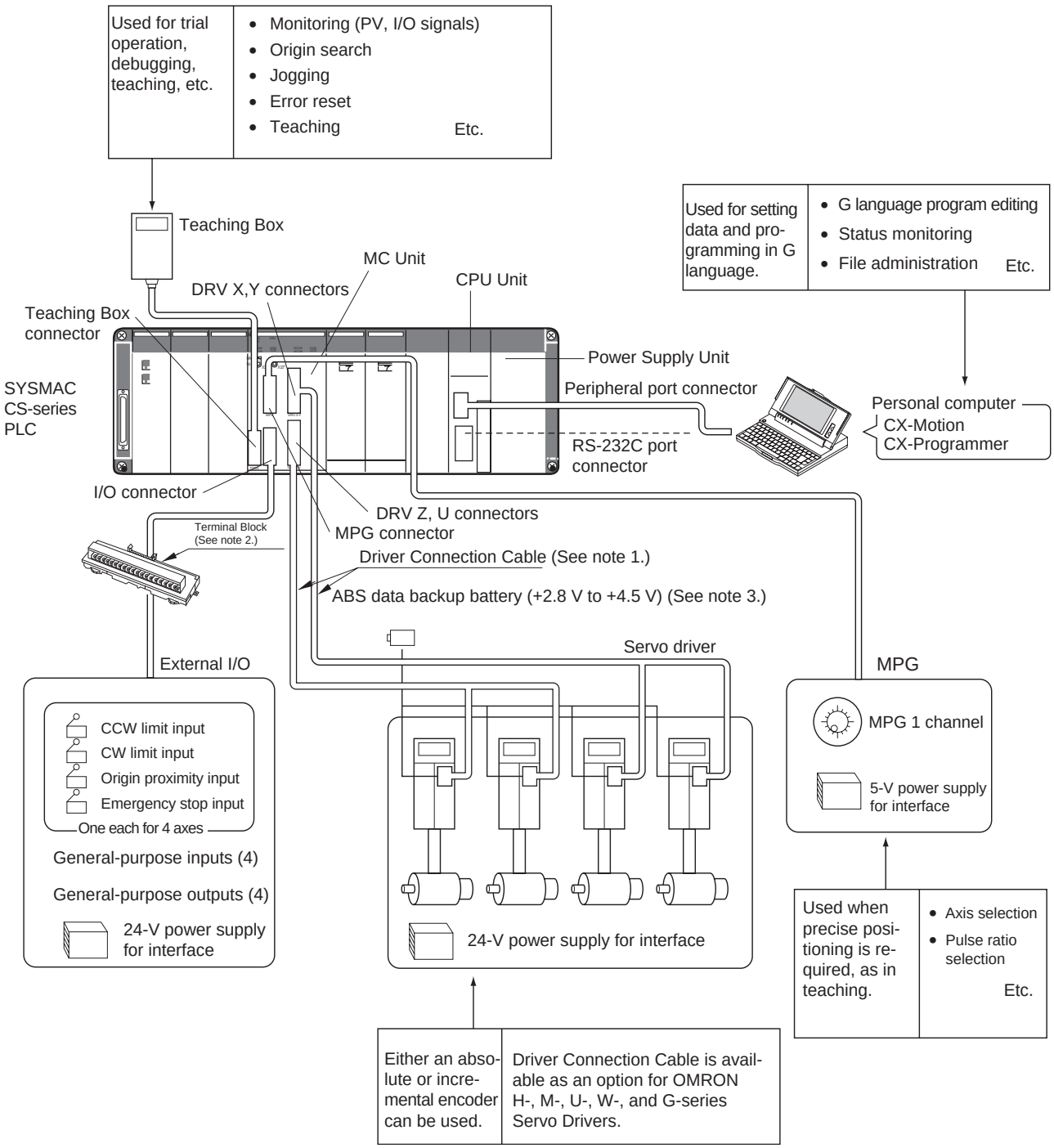

Note

1. A special Driver Connection Cable is available for OMRON U-, H-, M-, W-, and G-series Servo Drivers. A cable can also be prepared by the user.
2. A special cable is available for connecting to a Terminal Block. The cable can also be prepared by the user.
3. A data backup battery is required when using an absolute encoder.

The equipment and models used in this example system configuration are shown in the following table.

Devices	Model
Motion Control Unit	CS1W-MC421/MC221
SYSMAC CS-series CPU Unit	One of the following: CS1H-CPU6□ CS1G-CPU4□
Power Supply Unit	One of the following: C200HW-PA204 C200HW-PA204S C200HW-PA204R C200HW-PA209R C200HW-PD024
CPU Backplane	CS1W-BC023/BC033/BC053/BC083/BC103
Teaching Box	CVM1-PRO01 (Programming Console) + CVM1-MP702 (ROM Cassette)
Personal computer (for CX-Motion and CX-Programmer)	IBM PC/AT or compatible
CX-Motion/CX-Programmer	CXONE-AL□□C-EV□/-AL□□D-EV□
Servo Driver	R88D-M, -H, -U, -W, -G-series
Servomotor	R88M-M, -H, -U, -W, -G-series

Items Supplied by the User

If you are using a manual pulse generator (MPG) in your system, prepare the following items.
LGF-003-100 MPG (line driver output)
5-V power supply for the MPG

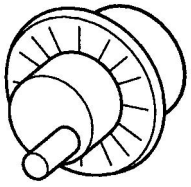

Sync encoders can also be connected to MPG connectors. Connecting a sync encoder makes it possible, for example, to synchronize axis feeding with a conveyer. If this is to be done, prepare the required sync encoder.

A data backup battery is required when using an absolute encoder. For details, refer to the Servo Driver manual.

In addition to the above, prepare power supplies for the Servo Driver interface and for external I/O.

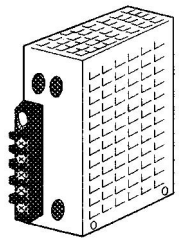

Power supply for the Servo Driver interface: 24 V
Power supply for the external I/O: 24 V

Cable to Connect CPU Unit to a IBM PC/AT or Compatible Running CX-Motion and CX-Programmer

Unit	Port on Unit	Port on computer	Serial communications mode (network)	Model numbers	Length	Remarks
CPU Unit	Peripheral	9-pin D-sub male	Peripheral bus or Host Link	CS1W-CN226	2.0 m	---
				CS1W-CN626	6.0 m	
	RS-232C (9-pin D-sub female)			XW2Z-200S-CV	2.0 m	ESD (static electricity)-resistant connectors used.
				XW2Z-500S-CV	5.0 m	
Serial Communications Board/ Unit	RS-232C (9-pin D-sub female)		Host Link	XW2Z-200S-CV	2.0 m	
				XW2Z-500S-CV	5.0 m	

Driver Connection Cable

The Driver Connection Cable is a special cable for connecting the MC Unit to the Servo Driver. It can be used for connecting OMRON H-, M-, U-, W-, and G-series Servo Drivers.

Connected Driver	Cable model for 1 axis	Cable model for 2 axes	Length (m)
R88D-H Series	R88A-CPH001M1 R88A-CPH002M1	R88A-CPH001M2 R88A-CPH002M2	1.0 2.0
R88D-M Series	R88A-CPM001M1 R88A-CPM002M1	R88A-CPM001M2 R88A-CPM002M2	1.0 2.0
R88D-U Series (for 30-W to 750-W Drivers)	R88A-CPU001M1 R88A-CPU002M1	R88A-CPU001M2 R88A-CPU002M2	1.0 2.0
R88D-U Series (for 1-KW to 5-KW Drivers)	R88A-CPUB001M1 R88A-CPUB002M1	R88A-CPUB001M2 R88A-CPUB002M2	1.0 2.0
R88D-W Series	R88A-CPW001M1 R88A-CPW002M1 R88A-CPW003M1 R88A-CPW005M1	R88A-CPW001M2 R88A-CPW002M2 R88A-CPW003M2 R88A-CPW005M2	1.0 2.0 3.0 5.0
R88D-G Series	R88A-CPG001M1 R88A-CPG002M1 R88A-CPG003M1 R88A-CPG005M1	R88A-CPG001M2 R88A-CPG002M2 R88A-CPG003M2 R88A-CPG005M2	1.0 2.0 3.0 5.0

I/O Cable and Terminal Block

The following table shows the model numbers of the I/O Cable and Terminal Blocks for connecting CCW limit input signals, CW limit input signals, proximity input signals, etc., to the MC Unit.

Name	Model	Remarks
MC Unit Terminal Block Connecting Cable	XW2Z-100J-F1	Length: 1 m (for 2 or 4 axes)
MC Unit Terminal Block	XW2B-20J6-6	For CS1W-MC221 (2 axes)
	XW2B-40J6-7	For CS1W-MC421 (4 axes)

1-3 Basic Operations

The MC Unit has been developed for use in simple positioning applications using servomotors. Depending on the machine being controlled, the accuracy of the MC Unit should be about five to ten times higher than the machine being controlled. Applicable machines are as follows:

Conveyor Systems: X/Y tables, palletizers/depalletizers, loaders/unloaders, etc.

Assembling Systems: Simple robots (including orthogonal robots), simple automated assembling machines, etc.

Orthogonal Robots

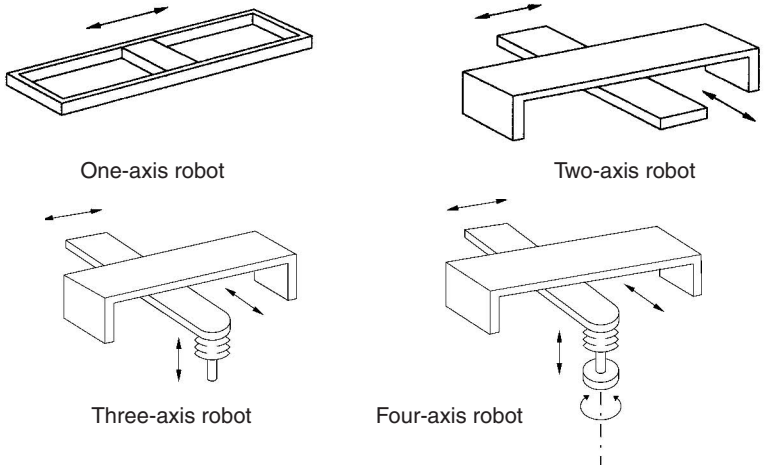

Note The CS1W-MC221 can control one or two axes.

PTP control can be performed when horizontal articulated robots or cylindrical robots are used, but linear interpolation, circular interpolation, and helical circular interpolation are not possible.

Horizontal Articulated Robots

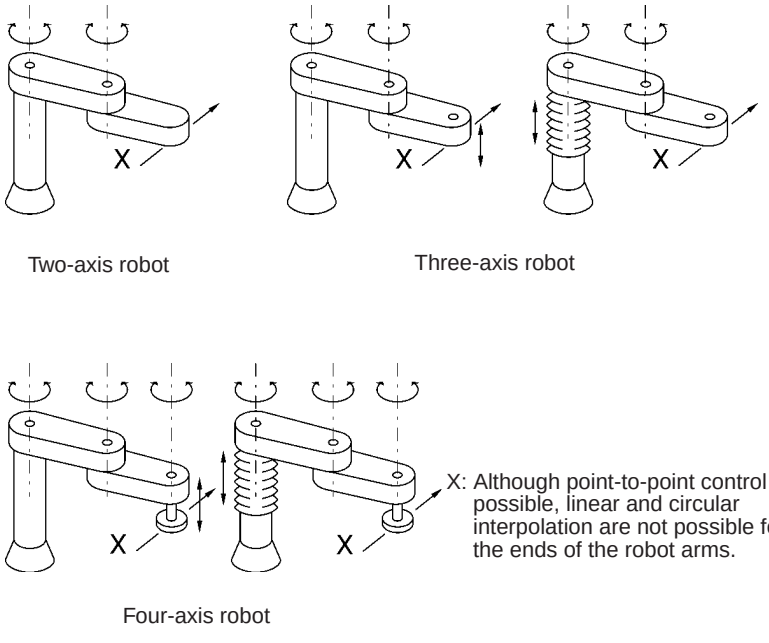

Cylindrical Robots

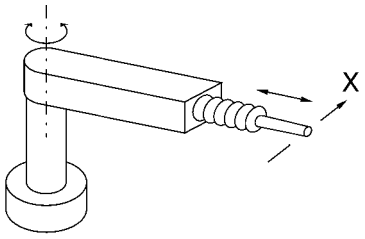

Two-axis robot

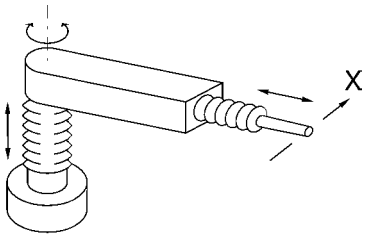

Three-axis robot

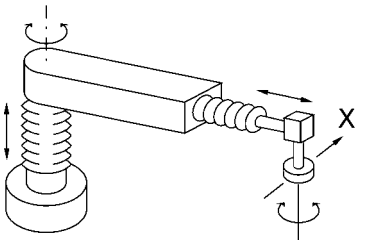

Four-axis robot

X: Although point-to-point control is possible, linear and circular interpolation are not possible for the ends of the robot arms.

1-3-1 Motion Control

The MC Unit offers the following three types of motion control:

PTP Control
CP Control (linear interpolation and circular interpolation)
Interrupt Feeding

Control programs are created in the G language.

PTP Control

PTP control is used to control each axis (X and Y axis) independently. Positioning time depends on the travel distance and speed of each axis.

Example: Moving from the origin to the X-axis coordinate of 100 and Y-axis coordinate of 50 at the same speed.

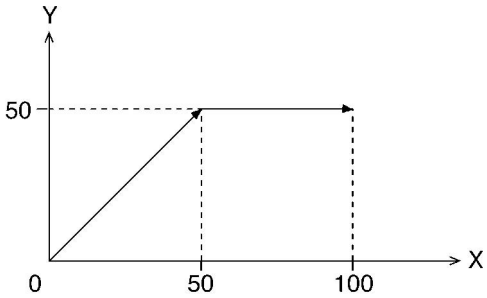

Positioning is executed separately for each axis, so travel between the two points is carried out as shown in the diagram.

CP Control

CP control is used to position by designating not only the starting point and the target point, but also the path between these two points. Both linear interpolation and circular interpolation are possible.

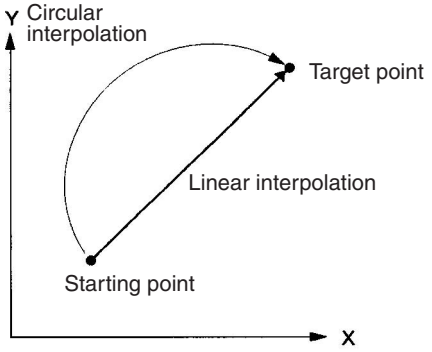

Interrupt Feeding

Interrupt feeding is used to perform speed control until an external signal is input and to perform position control for a fixed distance when the external signal is input. Positioning with no interrupt signal is also possible.

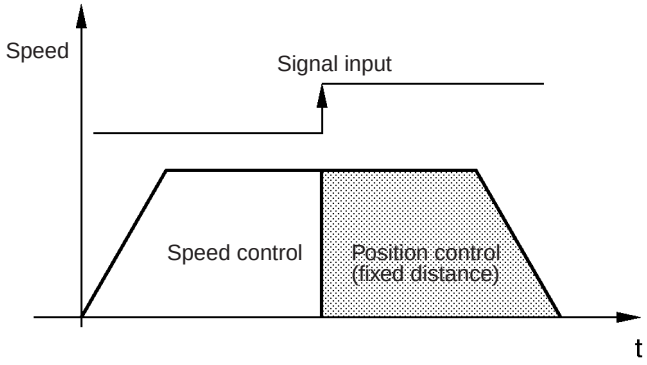

Multiturn Circular Interpolation

The multiturn circular interpolation function has been added to the existing circular and helical circular interpolation functions. This function can be used for applications such as winding machine operations.

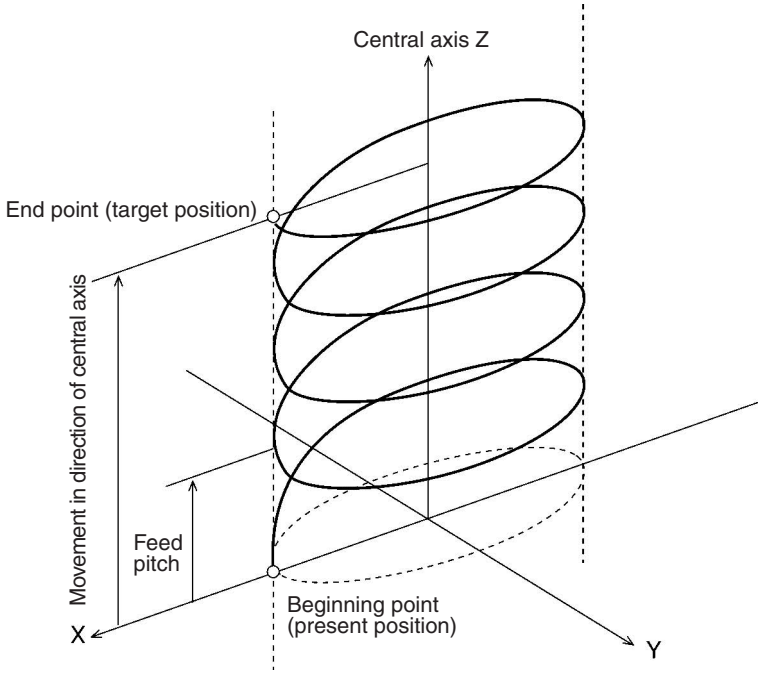

Traversing

The following illustration shows the action of the winder (traverse function) for a winding machine.

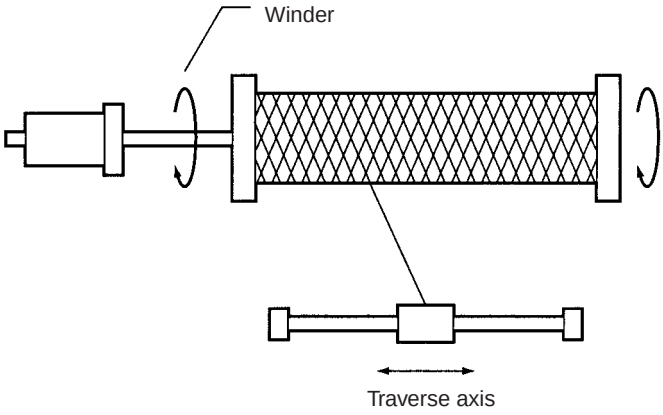

Unlimited Feeding This function executes unlimited feeding for the specified axis.

1-3-2 Other Functions

Origin Search Establishes the origin for a specified axis.

Jogging Starts and stops positioning at a specified speed along a specified axis.

Error Counter Reset Forcibly resets the error counter to zero and stops axis operation after a deceleration command.

Present Position Preset Changes the present position according to specified position data.

Teaching Obtains the present position to create position data.

Zones A Zone Flag turns ON when the present position is within a preset range.

Override (Real Time Speed Change) Changes the speed during PTP, linear interpolation, or circular interpolation operations.

Backlash Correction Compensates for inaccurate meshing in the mechanical system.

Electronic Gears Sets a pulse ratio for the input pulses with MPG/sync encoders.

1-3-3 Summary of Function

The following diagram summarizes the MC Unit functions.

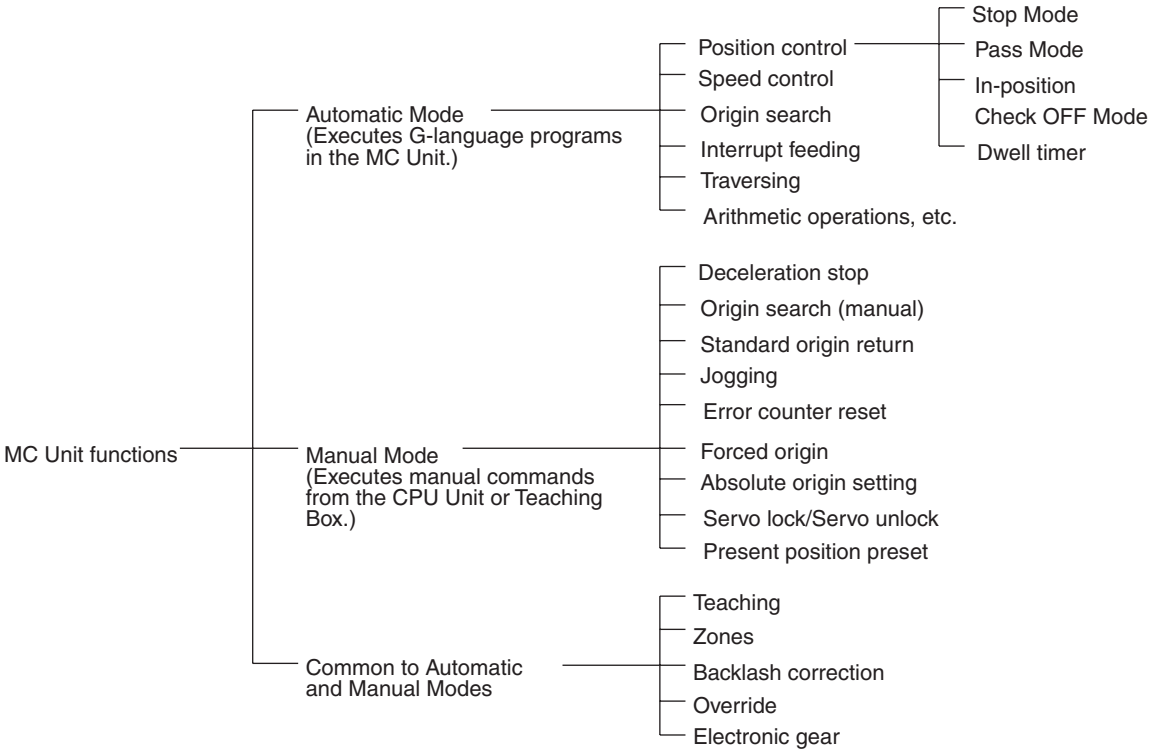

Note Positioning operations using the MC Unit are performed based on two coordinate systems: A reference coordinate system and a workpiece coordinate system.

The reference coordinate system is the most fundamental one for positioning operations. The workpiece coordinate system is offset from the reference coordinate system by a specified amount, allowing the user to freely set a coordinate system.

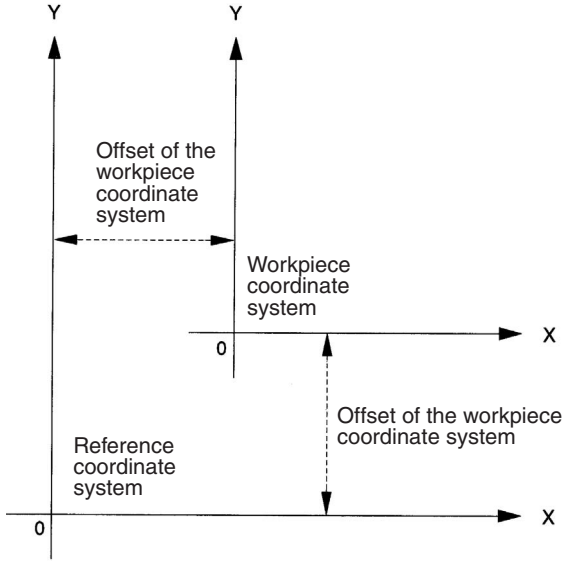

1-4 Control System Configuration and Principles

1-4-1 Servo System

The servo system used by and the internal operations of the MC Unit are briefly described below.

Semi-closed Loop System

The servo system of the MC Unit uses a semi-closed loop system. This system is designed to detect actual machine movements by rotation of the motor in relation to a target value. It computes the error between the target value and actual movement, and zeroes the error through feedback.

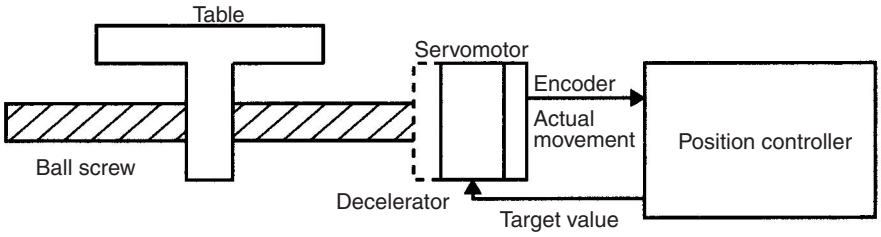

Semi-closed loop systems occupy the mainstream in modern servo systems applied to positioning devices for industrial applications.

Internal Operations of the MC Unit

Commands to the MC Unit, speed control voltage to the servo driver, and the feedback signals from the encoder are described in the next few pages.

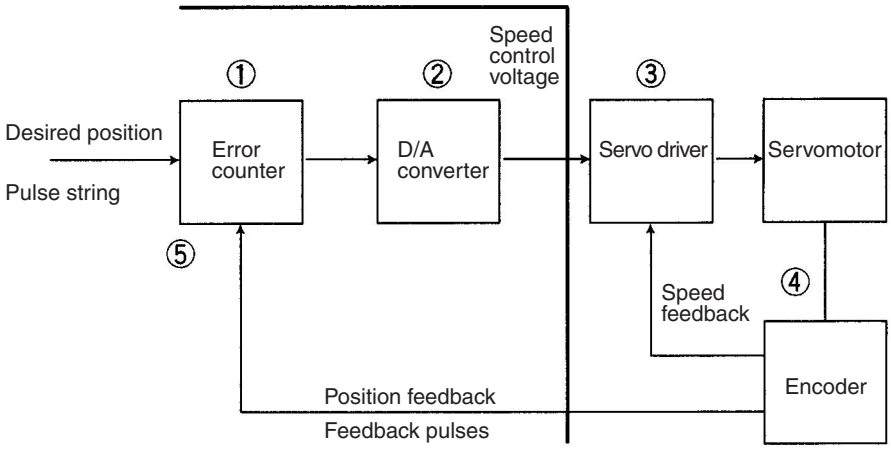

1,2,3...

1. The error counter receives a target position in units of encoder pulses. This is called a pulse string.
2. The error counter is directly connected to the D/A converter where the pulses received by the error counter are converted to analog voltages. These analog voltages are sent to the servo driver as the speed control voltages.

3. When the speed control voltage is received by the servo driver, it rotates the motor at a speed corresponding to the speed control voltage. The rotational speed is in proportion to the speed control voltage.

Servo Driver Speed Characteristics

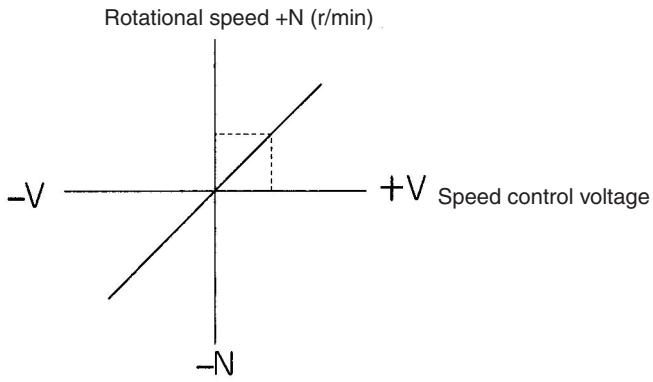

4. The rotary encoder directly connected to the motor axis rotates in sync with the motor and generates feedback pulses.
5. The error counter is reduced by the feedback pulses until the error counter goes to zero. When the error counter goes to zero, the speed control voltage to the servo driver becomes zero and the motor stops rotating.

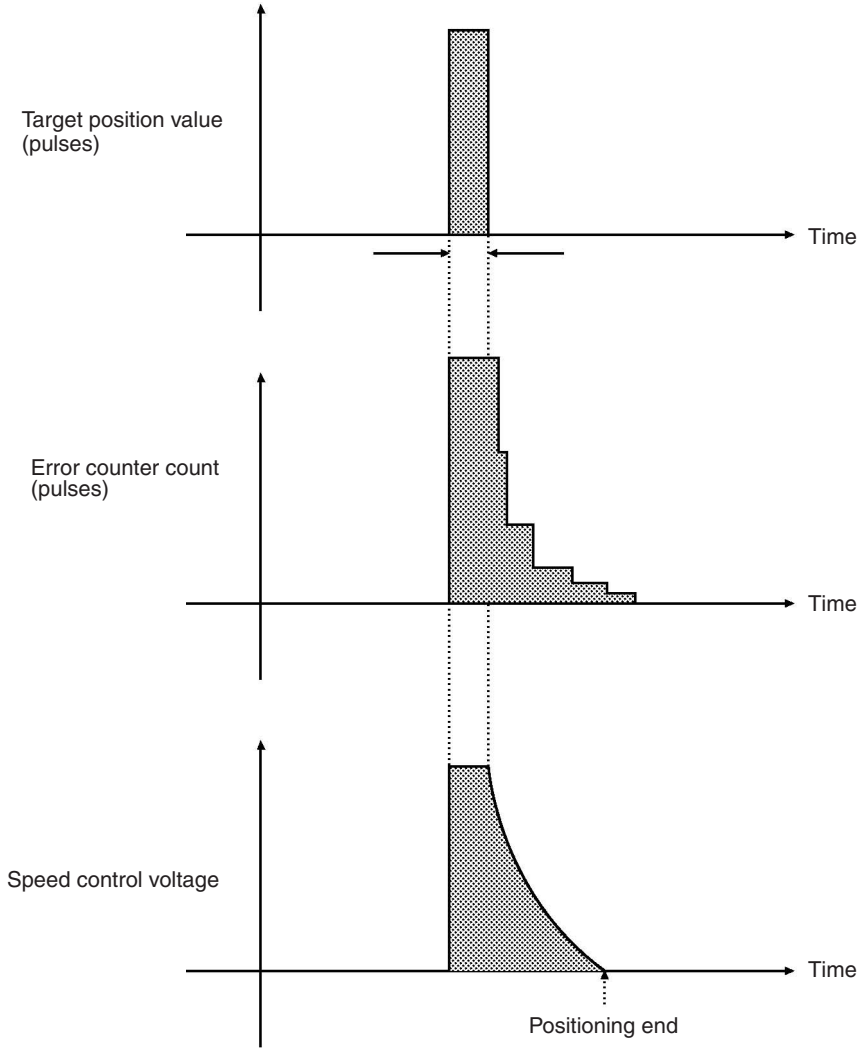

6. Unless the target position is given, the error counter constantly maintains the stopped position.
7. If the motor axis moves slightly due to a drift in the driver or voltage output, the error counter receives a feedback pulse from the rotary encoder and a speed control voltage is output in the reverse direction, causing the motor to rotate toward its original position. This corrective operation for maintaining the present position is called servolock or servoclamp.
8. Using this principle, positioning with acceleration and deceleration is executed by continuously setting target positions in the error counter.
9. The target position set in the error counter becomes the error counter count as shown below. The count is converted to a speed control voltage for the servo driver to control the motor.

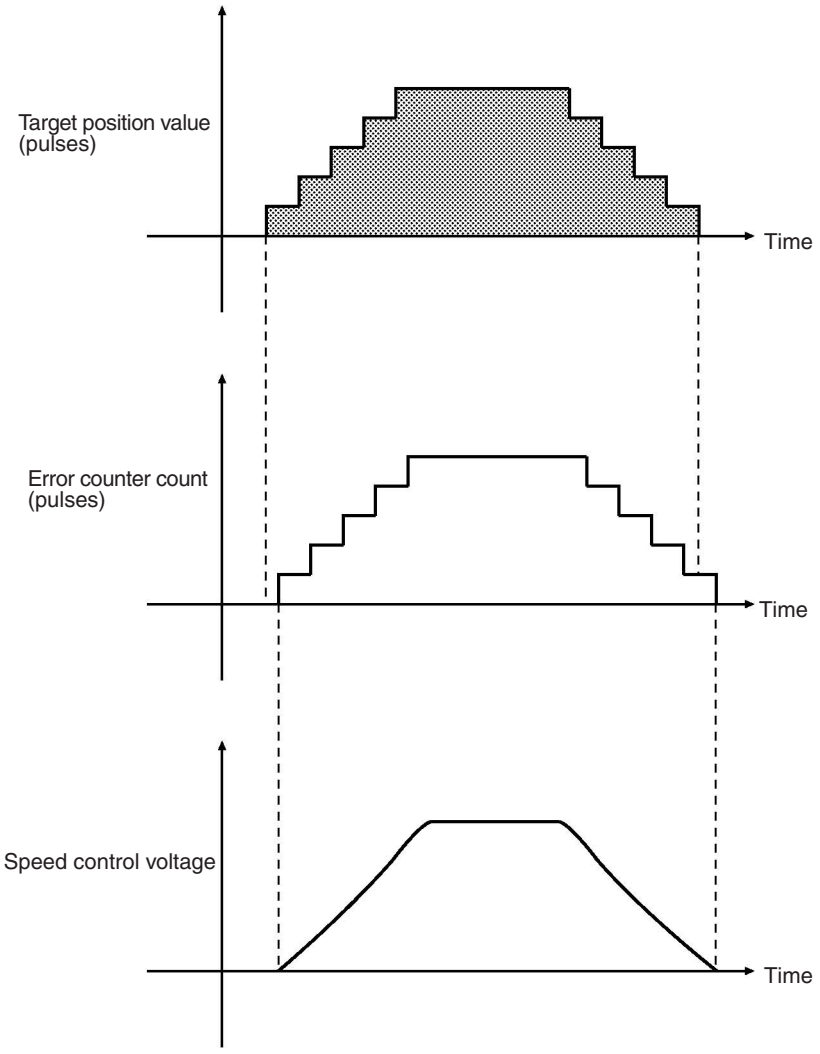

Thus, the position equals the total count of target positions (shaded area in the figure), and the speed will depend on the target position value per unit time.

1-4-2 Feedback Pulses

Standard OMRON Servomotors are designed for an advanced phase-A for forward rotation and an advanced phase-B for reverse rotation. The MC Unit is designed to comply with this phase advancement, allowing OMRON Driver Connecting Cables to be connected without modification.

Forward Rotation (Positive Speed Reference)

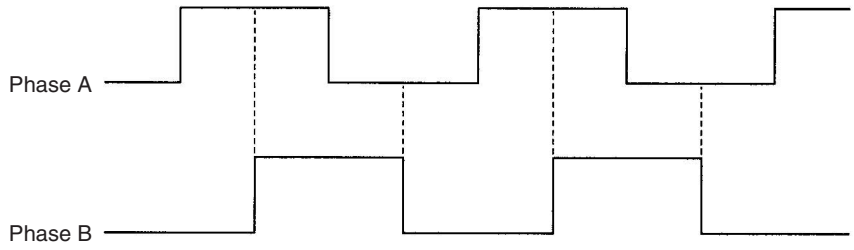

Reverse Rotation (Negative Speed Reference)

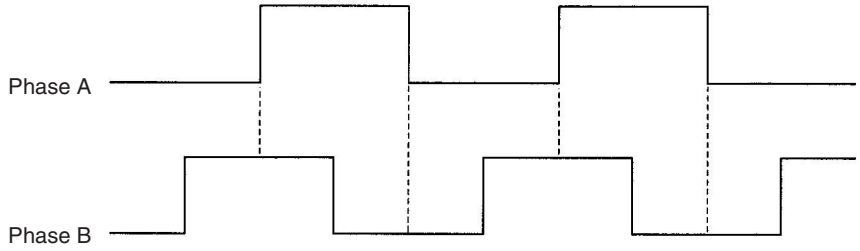

When using Servomotors by other manufacturers, check carefully the encoder specifications. If the definition differs from the ones given above, take one of the following actions:

- Reverse the phase-B wiring between the MC Unit and the servo driver. (Reverse the +B terminal and the –B terminal.)
- Set the machine parameter “encoder polarity” in the system parameters to “reverse rotation for encoder increase.” It is initially set to the “forward rotation at the encoder increase.”

1-4-3 CW and CCW

The abbreviations “CW” and “CCW” used in this manual to describe the operation of the MC Unit are defined as follows:

CW (Clockwise)

Clockwise is the direction in which the present position increases.

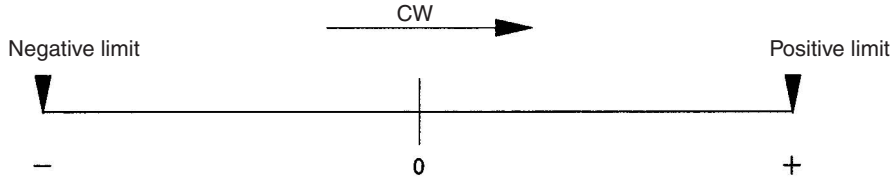

CCW (Counterclockwise)

Counterclockwise is the direction in which the present position decreases.

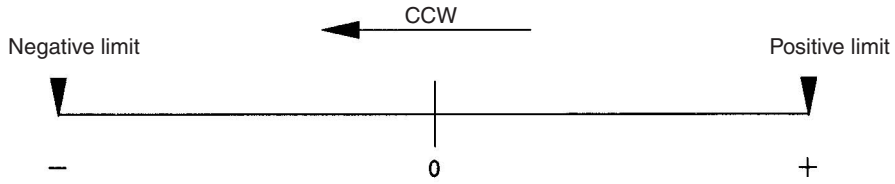

1-5 Specifications

General Specifications

Item	Specifications	
Model	CS1W-MC221	CS1W-MC421
Power supply voltage	5 VDC (from Backplane)	
	24 VDC (from external power supply)	
Voltage fluctuation tolerance	4.75-5.25 VDC (from Backplane)	
	21.6-26.4 VDC (from external power supply)	
Internal current consumption	600 mA or less for 5 VDC (with Teaching Box connected: 800 mA or less)	700 mA or less for 5 VDC (with Teaching Box connected: 1,000 mA or less)
	0.2 A or less for 24 VDC	
Weight (Connectors excluded)	450 g max.	540 g max.
Safety standards	Conforms to UL (Class 2), CSA (class 2), and EC specifications.	
External dimensions	130.0 x 35.0 x 100.5 mm (H x W x D)	130.0 x 70.0 x 100.5 mm (H x W x D)

Specifications other than those shown above conform to those for the SYSMAC CS Series.

Functions and Performance Specifications

Item		Specifications	
		CS1W-MC221	CS1W-MC421
Applicable PLC		CS Series	
Type of Unit		CS Special I/O Unit	
Backplanes on which MC Unit can be mounted		CPU Backplane or CS Expansion I/O Backplane (See note 1.)	
Method for data transfer with CPU Unit	Words allocated to Special I/O Units in CIO Area	30 words/Unit (uses 3 unit numbers.) (See note 2.)	50 words/Unit (uses 5 unit numbers.) (See note 2.)
		CPU Unit to MC Unit: Commands: G-language program execution/stop, origin search, manual operation, etc. Data transfer: Position data, acceleration/ deceleration data, etc. MC Unit to CPU Unit: Status: Positioning completed, zones, busy flag, etc. Monitor data: Present position, error codes, M codes, etc.	
	Words allocated to Special I/O Units in DM Area	Not used.	Not used.
Controlled Driver		Analog input servo driver (Example: OMRON OMNUC H, M, U, W, or G Series)	
Built-in program language		G language (Started by receiving a start command from the CPU Unit ladder diagram program.)	
Control	Control method	Speed reference voltage output-type semi-closed loop system, using incremental and absolute encoder inputs.	
	Number of controlled axes	2 max.	4 max.
		Multitasking can be used to execute independent operating modes and programs for each axis.	

Item		Specifications	
		CS1W-MC221	**CS1W-MC421**
Automatic/Manual Mode (for each task)		Automatic Mode: Mode for executing MC program created in G language. Manual Mode: Mode for executing manual commands from CPU Unit (PLC interface area) or Teaching Box. • The Automatic or Manual Mode is set according to the PLC interface area of the CPU Unit. • There are a total of 11 Automatic Mode commands, including origin search, reference origin return, JOG, and error reset. • The operation cycle is started in Automatic Mode through dedicated bits in the CPU Unit or from the Teaching Box.	
Encoder interface		Line receiver input; maximum response frequency: 500 kp/s (before multiplication) Pulse ratio: Select 1, 2, or 4 **Note:** The applicable absolute encoders are the OMRON OMNUC U-, W-, and G-series Encoders. A Motion Control Unit with unit version 1.1 or later is required to use the absolute encoder functionality of the OMNUC G Series.	
Control unit	Minimum setting unit	1, 0.1, 0.01, 0.001, 0.0001	
	Units	mm, inch, degree, pulse (There is no unit conversion function.) See note 3.	
Maximum command value		–39,999,999 to +39,999,999 (When the minimum setting unit is 1.) (See note 6.)	
Number of controlled axes		2 axes max.	4 axes max.
Positioning operations	PTP (independent) control	Execution by independent programs, operating modes for each axis.	
	Linear interpolation	2 axes max.	4 axes max.
	Circular interpolation	Circular interpolation for a maximum of two axes on a plane.	
	Helical circular interpolation	---	Circular interpolation for a maximum of two axes on a plane + one axis for feed control
	Traverse function	Traverse operation for two axes	
	Speed control	Speed control for each axis	
	Unlimited Feed Mode	Axis feeding can be executed with no limit.	
	Interrupt feeding	Feeding a fixed distance after an interrupt input, for each axis. (Positioning with no interrupt input signals is also possible.)	
Speed reference		1 pps to 2,000 kp/s (when ratio is 4)	
Acceleration/deceleration curve		Trapezoidal or S-curve	
Acceleration/deceleration time		Individual acceleration/deceleration settings possible: 0 to 100,000 ms (2-ms increments)	

Item		Specifications	
		CS1W-MC221	**CS1W-MC421**
External I/O	Peripheral device	Teaching Box (1 only)	
	Encoder	Line receiver inputs: For two axes (500 kp/s before multiplication)	Line receiver inputs: For four axes (500 kp/s before multiplication)
	MPG /sync encoder	Line driver output-type MPG/sync encoder: 1 500 kp/s max. (before multiplication)	
	Servo driver relationships	The following signals are each provided for two axes:	The following signals are each provided for four axes:
		Inputs: Driver alarm signals Outputs: Driver alarm reset signals High-speed reference voltage outputs (±10 V) Operation command outputs SEN signals (for absolute encoder)	
	Individual axis control (See note 4.)	The following signals are each provided for two axes:	The following signals are each provided for four axes:
		Input: CCW limit inputs CW limit inputs Origin proximity inputs Emergency stop inputs	
	Others (See note 4.)	General inputs: 4 pts. (interrupt inputs) General outputs: 4 pts. (brake signal outputs)	
Feed operations	High-speed feed rate	Example: 36.86 m/min Conditions	
	Interpolation feed rate	Encoder resolution: 2,048 p/r Motor speed: 4,500 r/m Control unit: 0.001 mm/pulse	
	High-speed feed override	0.1% to 100.0% (Setting unit: 0.1%)	
	Interpolation feed override	0.1% to 199.9% (Setting unit: 0.1%)	
	Jog feed override	0.1% to 100.0% (Setting unit: 0.1%)	
Axis control	Zone settings	Up to 8 zones/axis can be set.	
	Backlash correction	Can be set from 0 to 10,000 pulses.	
	In-position zone	Can be set from 0 to 10,000 pulses.	
	Position loop gain	1 to 250 (1/s)	
	Feedforward gain	0% to 100%	

Item		Specifications	
		CS1W-MC221	**CS1W-MC421**
Task program management	Number of tasks	2 max. (program execution units)	4 max. (program execution units)
	Number of programs	The maximum number of programs differs according to the number of tasks. When 1 task is used: 100 When 2 tasks are used: 50	The maximum number of programs differs according to the number of tasks. When 1 task is used: 100 When 2 tasks are used: 50 When 3 task are used: 33 When 4 tasks are used: 25
	Program capacity	When 1 task is used: 2,000 blocks When 2 tasks are used: 1,000 blocks/task The maximum number of blocks in a single program is 800.	When 1 task is used: 2,000 blocks When 2 tasks are used: 1,000 blocks/task When 3 task are used: 666 blocks/task When 4 tasks are used: 500 blocks/task The maximum number of blocks in a single program is 800.
	Position data capacity	2,000 positions max. (total for all axes)	
	Number of registers	32 (Mainly used for specifying position data numbers.)	
	Subroutine nesting	5 levels max.	
Saving program data	MC Unit	Backed up by flash memory. (See note 5.)	
	External peripheral devices	CX-Motion can be used to save data to a floppy disk or the hard disk at the personal computer.	
Program and position data automatic download function		When the operation number (program or position data) is specified by an IOWR instruction from the CPU Unit, CX-Motion recognizes it and downloads the program or position data to the MC Unit.	
Self-diagnostic function		Memory corruption is detected.	
Error detection functions		Error counter warning, error counter over, absolute encoder error detection, CPU errors, communications errors (Teaching Box), flash memory error, EEPROM error, software limit over error, phase-Z error, overtravel, emergency stop, unit number error, driver alarm detection, driver reverse wiring detection, CPU Unit error detection	
Error log function		Stores up to 20 error log records.	

Note

1. The MC Unit must be mounted to the CPU Rack to use D codes. D codes will not be sent to the CPU Unit if the MC Unit is mounted to a CS Expansion Rack.
2. The number of MC Units that can be mounted under one CPU Unit must be determined based on the maximum number of Special I/O Units that can be allocated words in the CPU Unit, the power supply capacity on the CPU or Expansion Rack, and the current consumption of the Units mounted to the Rack. Refer to the CPU Unit's operation manual for details on calculation methods.
3. To display units other than pulses in the CX-Motion, change the display unit and then set the Pulse Rate to the amount of workpiece movement per pulse.
4. The required power supply must be provided by the user.
5. The service life for the flash memory is 100,000 writing operations.

6. The maximum position command values, software limit values, and zone values are as shown in the following table for each minimum setting unit.

Minimum setting unit				
1	**0.1**	**0.01**	**0.001**	**0.0001**
–39999999 to +39999999	–3999999.9 to +3999999.9	–399999.99 to +399999.99	–39999.999 to +39999.999	–3999.9999 to +3999.9999

The actual maximum ranges that can be set may be smaller than those shown above depending on the pulse rate. The maximum set value must satisfy the following two conditions:

- |Set value (C)| ≤ 1073741823 x P
- |Set value (C)| ≤ 39999999 (C)

P: Pulse rate (Pulse/pulse, mm/pulse, degrees/pulse, and inch/pulse)
C: Minimum setting unit (1, 0.1, 0.01, 0.001, 0.0001)

Example: If the minimum setting unit is 0.01 and pulse rate is 0.0001, the maximum set value can be calculated as follows:

1073741823 x 0.0001=10734.1823 < 399999.99

Therefore, the maximum range is –10734.18 to 10734.18 (because the minimum setting unit is 0.01).

Also, the maximum present position shown by CX-Motion or the Teaching Box will be within the ranges indicated in the table above.

Demand Positions and Present Positions

Data is stored internally in the MC Unit for the demand positions, software limits, present positions, zones, reference origin offsets, and workpiece origin offsets as 32-bit signed data in pulse units. The Teaching Box, CX-Motion, and CPU Unit, however, handle data in millimeters within the ranges described in note 2 for the above table. Depending on the pulse rate setting, the axes may move or stop in positions that cannot be handled by these devices. If a position is beyond the range that can be handled by these devices, it will be indicated as the maximum (399,999,999) or minimum (–399,999,999) value until the position returns within the range that can be indicated.

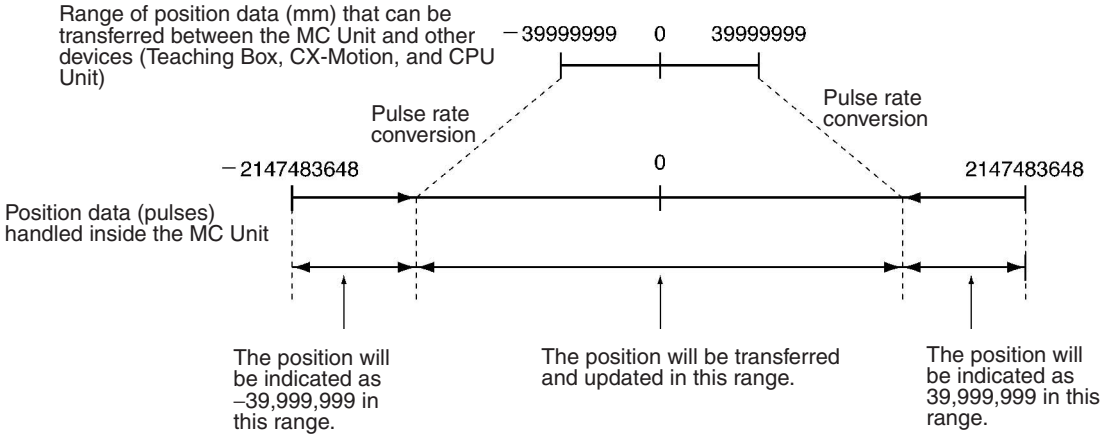

Note

1. The present position data held inside the MC Unit (32-bit signed data) can be directly read by the CPU Unit using the IORD instruction. Use addresses 17BA hex, 17BB hex, 17BC hex, and 17BD hex.
2. The present position monitoring function of the CX-Motion can be used to display the reference coordinate system present value in pulses between –268,435,455 and 268,435,455 (28-bit data).

1-5-1 Overview of Operations

Item		Contents
Operating modes		Manual Mode: Operation according to CPU Unit memory area or commands from Teaching Box. Automatic Mode: Operation according to commands in G-language program.
Manual	Jogging	Moves axes continuously by manual operation.
	Handle feed	Moves axes by MPG.
	Deceleration stop	Decelerates to a stop according to command.
	Manual origin search	Searches for mechanical origin. (Origin search is possible in either an incremental or absolute encoder system.)
	Manual origin return	Moves to origin in reference coordinate system.
	Forced origin	Forcibly sets the present position to 0 to establish it as the origin. (In an absolute encoder system, only the present position of the MC Unit will be set to 0.)
	Absolute origin setting	Sets the origin for an absolute encoder.
	Servo-lock	Creates a position loop and turns ON the operation command output to the servo driver, while simultaneously releasing the brake. When an absolute encoder is used, the absolute position is read before the servo-lock is applied.
	Servo-unlock	Releases the position loop and applies the brake, and simultaneously turns OFF the operation command output to the servo driver. Servo-unlock can be executed even in Automatic Mode.
	Electronic gear function	A fixed ratio (numerator and denominator) can be applied to input pulses, and output to the servomotor driver.

Item			Contents
Automatic	Positioning with linear interpolation		Executes linear interpolation at the specified interpolation feed rate for up to either two or four axes simultaneously.
	Positioning with circular interpolation		Executes clockwise or counterclockwise 2-axis circular interpolation at the specified interpolation feed rate.
	Positioning with helical circular interpolation		Executes clockwise or counterclockwise 2-axis circular interpolation and 1-axis linear interpolation (i.e., helical interpolation) at the specified interpolation feed rate. (Available for CS1W-MC421 only.)
	Traverse function		Executes winding (traverse operation).
	Speed control		Moves a maximum of either two or four axes at a controlled speed.
	Interrupt feeding		Moves a specified axis for a fixed amount when a general input is turned ON. With interrupt feeding, positioning without an interrupt signal can be executed.
	Switching to Pass Mode		Changes to Pass Mode, in which operations are executed one by one with no deceleration stop. In Pass Mode, the interpolation acceleration or deceleration time of the previous operation can be specified for the next operation (Pass Mode time selection). A pass operation for only one axis can be executed at a fixed acceleration (with a fixed acceleration mode setting).
	Switching to In-position Check OFF Mode		Starts the next positioning operation without waiting for the current one to be completed.
	Stop-over function		Outputs an M code or a D code while axes are being moved by a fixed amount (determined by present position), without stopping the operation. G codes are also possible for all operations.
	Dwell timer		Pauses positioning for a specified time.
	Workpiece origin return		Automatically returns to workpiece origin.
	Automatic origin return		Automatically returns to reference coordinate system origin.
Automatic	Cycle start		Executes a specified program from the first block, or resumes execution of a stopped program.
	Single block		Executes the program one block at a time.
	Pause		Temporarily halts program execution.
	Forced block end		Forcibly ends execution of a block.
	Error reset		Clears error status.
	M code reset		Resets the M code (for interlock).
	Teaching		Creates position data for each task.
	Auxiliary	Optional inputs	20 points: Specify input information to be referenced by special G code. Of the 20 input points, 4 can be specified as general-purpose inputs for the MC Unit.
		M code	0 to 999 0 to 499: M code for taking interlock 500 to 999: M code not taking interlock
		D code (interrupt code)	0 to 255 Starts a CPU Unit external interrupt task when positioning is completed or when passing through a particular position.

Item		Contents
Automatic and Manual Mode	Backlash correction	The amount of correction for backlash in the mechanical system can be registered in advance.
	Error counter reset	Forcibly resets the error counter to 0, and stops axis operation. (Enabled when no speed reference is provided to the servo driver.)
	Override	Changes the operating speed by applying a specified percentage to the speed specified in the system parameters or G-language program.
	Zones	A zone flag turns ON when the present position enters a preset range.
	Unlimited Feed Mode, unlimited present position display	Moves the axis with no limit. In this mode, a range for refreshing the present position can be specified.
	Origin search function	The search pattern can be selected to shorten the origin search time. Either a deceleration stop or accumulated pulse stop can be selected for when a limit input is received during the origin search.
	Trapezoid/S-curve acceleration and deceleration	Either trapezoid or S-curve acceleration and deceleration can be specified for starting and stopping each axis.
	Driver alarm reset	Resets the servo driver alarm.
	Data transfer	Data is transferred between the CPU Unit and the MC Unit by means of the CPU Unit's IORD and IOWR instructions. There are two modes for transferring data: One for transferring large amounts of data, and another for rapidly transferring small amounts of data.
	Servo data trace function	Up to 500 data items, including speed reference values, present speed, and error counter data, can be traced for each axis. This data can be referenced by CX-Motion.

1-5-2 Performance Chart

Item	Typical value	Description
Power ON startup time	Average: 600 ms	Time from turning ON the power until manual operation commands are accepted.
Cyclic service time	MC221: 0.8 ms/Unit MC421: 0.85 ms/Unit	Time by which the CPU Unit cycle time will be extended per MC Unit.
IOWR execution time	0.7 ms/instruction	Time by which the cycle time will be extended when IOWR is executed.
IORD execution time	0.8 ms/instruction	Time by which the cycle time will be extended when IORD is executed.
Data write time	475 ms/1,000 words	Time from when IOWR is executed until data transfer is completed.
Data read time	470 ms/1,000 words	Time from when IORD is executed until data transfer is completed.
Operation startup time	MC221: 8 ms MC421: 12 ms	MC221: Time for X axis operation with a 1-task, 2-axis configuration. MC421: Time for X axis operation with a 1-task, 4-axis configuration.
Analog voltage output time lag per axis for interpolation	MC221: 150 μs MC421: 210 μs	Time delay when interpolation is performed for 1 task.
Analog voltage output time lag per axis for independent operation	MC221: 4.3 ms/axis MC421: 4.3 ms/axis	Time delay when one axis each is started for all tasks simultaneously.

Item	Typical value	Description
Interrupt notification time	2.25 ms	When C200H□-series Special I/O Unit is not mounted.
G language interpretation time	MC221: 2.0 ms MC421: 4.2 ms	Interpretation time for G language when axis movement is not performed.
Minimum operation time	MC221: 8.5 ms MC421: 9.5 ms	When the time for linear interpolation is equal to or less than the values given, Stop Mode operation will be used even in Pass Mode or In-Position Check OFF Mode.
Minimum traverse reversal time	2 ms	Reversing operation is possible every 2 ms for traverse operation.
External input response time	General purpose input: 4.5 ms max. Emergency stop input: 4.5 ms max. CW/CCW limit input: 4.5 ms max. Origin proximity input: 4.5 ms	Response time to external input signals.
Zone Flag notification time	MC221: 14.08 ms MC421: 34.08 ms	The time required for one Zone Flag to respond.

Note The above typical values will change depending on the task and axis configuration.

1-5-3 CX-Motion Functions

Function	Explanation
Program editing	Creating, changing, and clearing MC programs.
Position data editing	Creating, changing, and clearing position data.
Parameter editing	Creating and changing system parameters, and clearing to defaults.
Transfer and comparison	Transferring and verifying MC programs, system parameters, and position data contents between MC Unit and personal computer.
Printing	Printing MC programs, system parameters, and position data contents.
Monitoring	Monitoring MC programs that are being run. Monitoring present values: Reference coordinate system PV (user settings and pulses) Workpiece coordinate system PV Workpiece origin shift amount Error counter value MC Unit FAL status MC Unit I/O status MC Unit error log (CS1W-MC421/MC221 only)
File management	File list display, loading, saving, changing
User-defined mnemonics	Setting G code by mnemonics.
Servo trace	Displaying servo trace data with the MC Unit (CS1W-MC421/MC221 only).
Automatic loading	Automatic downloading of programs and position data to the MC Unit (CS1W-MC421/MC221 only).
File conversion	Converting parameters created by MC Support Software for use by the CS1W-MC421/MC221.

CX-Motion can be installed from the CX-One. Refer to the *CX-One Setup Manual* (Cat. No. W463) for information on system requirements and installation methods for the CX-One.

1-5-4 Teaching Box Functions

Function		Description
Deceleration stop		Decelerates all axes to a stop and stops the execution of a program.
Error reset	MC Unit error reset	Resets errors that have occurred in the MC Unit.
	Servo driver error reset	Resets alarms for the servo driver.
Monitoring	Present values	Monitors the following present values: Present position in the reference coordinate system (using user-set unit such as mm). Present position in the reference coordinate system (in pulses). Error counter value.
	Position data	Reads, changes, and creates position data stored in the MC Unit.
	Errors	Reads errors that have occurred in the MC Unit.
	I/O signals	Monitors and changes I/O signals connected to the MC Unit.
	Phase-Z margin	Monitors the number of pulses to phase Z from the origin input.
	Servo parameters	Reads and changes servo parameters.
Origin search		Searches for the origin.
Program execution	Task/program No. designation	Designates the desired task and program to be executed.
	Cycle run	Executes tasks.
	Single block run	Executes the program block by block.
Jogging		Jogs individual axes. More than one axis cannot be jogged at the same time.
MPG feeding	Pulse ratio	Designates the ratio for 1 pulse for the MPG.
Override		Increases or decreases the operating speed during program execution.
Teaching		Registers the present position as position data.
Extension	Mode	Changes the mode used to control the MC Unit.
	Servo-lock/ servo-unlock	Locks or releases the servomotor.
	Memory protection	Protects or clears protection for the memory (position data area, system parameters) in the MC Unit.
	Absolute origin setting	Sets the absolute encoder's mechanical origin to 0, and establishes it as the origin. Executed when first using a absolute encoder or after replacing the absolute encoder.
	Teaching Box message display	Switches between English and Japanese for the Teaching Box message display.
Saving		Stores system parameters, position data, and programs in the flash memory.
Error detection		CPU errors Communications errors

1-6 Data Exchange

The CPU Unit Controls the MC Unit through the PLC interface area in the CPU Unit during I/O refreshing and by data inputs and outputs at a any time.

1-6-1 Overall Structure

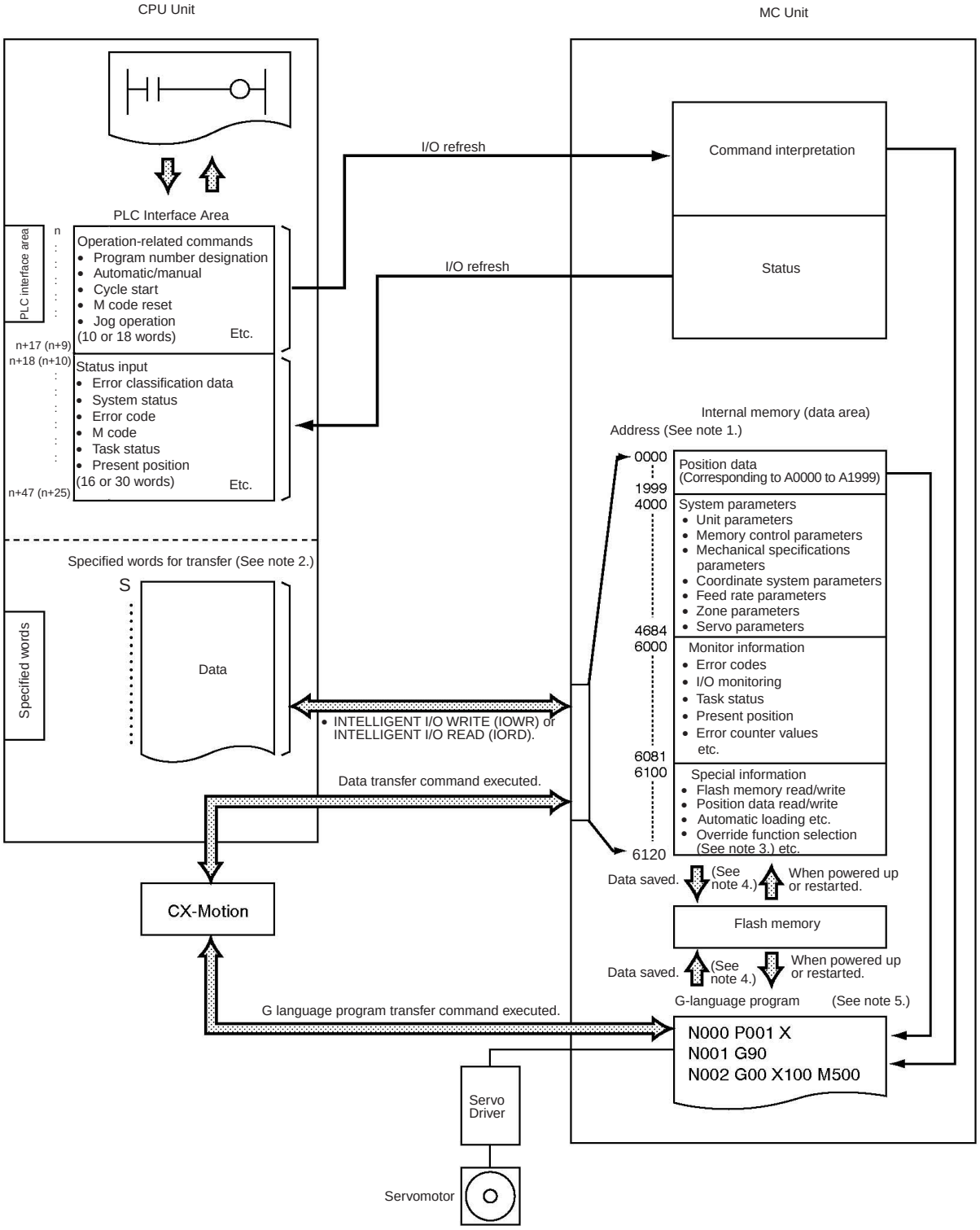

Note

1. With the CS1W-MC221, there are no addresses for task 3, task 4, the Z axis, or the U axis. For the purposes of this illustration, CS1W-MC421 addresses are shown. For details, refer to *SECTION 3 MC Unit Internal Data Configuration*.
2. Words data transfer are required when IORD or IOWR is used for transferring data between the CPU Unit and the MC Unit. They are not required when using CX-Motion to transfer data.
3. The override function selection (6120) can be used only with Unit Ver. 1.15 or later, and with Units whose model number ends in -V1.
4. Position data, system parameters, and G-language programs are saved to and read from flash memory. Monitor information and special information are not.
5. When positioning by means of a G-language program, the positioning coordinates can be set directly or they can be set indirectly using position data (A0000 to A1999).

1-6-2 Explanation

PLC Interface Area

Words in the Special I/O Unit Area are allocated to MC Unit according to the unit number setting switch on the front panel of the Unit. The CS1W-MC421 is allocated 50 words, and the CS1W-MC221 is allocated 30 words. For details on the PLC Interface Area, refer to *SECTION 5 Exchanging Data with the CPU Unit*.

CS1W-MC421

During I/O refreshing, data in the 18 words from n to n+17 (including commands related to operations and other information) is transferred from the CPU Unit to the MC Unit. Likewise, data in the 30 words from n+18 to n+47 (containing status information) is input from the MC Unit to the CPU Unit. Words n+48 and n+49 are reserved for the system.

CS1W-MC221

During I/O refreshing, data in the 10 words from n to n+9 (including commands related to operations and other information) are transferred from the CPU Unit to the MC Unit. Likewise, data in the 16 words from n+10 to n+25 (containing status information) is input from the MC Unit to the CPU Unit. Words n+26 to n+29 are reserved for the system.

Data

The data consists of system parameters, position data, monitoring information, and a command area. System parameters and position data are required for motion control. Basically, the data is set using CX-Motion and then transferred to the MC Unit. The transferred data is stored in the MC Unit's internal memory and identified by address. The data can then be read or set by using IORD or IOWR in a ladder diagram program to specify addresses.

Monitoring information is read-only data. It includes MC Unit status, I/O monitoring data, and so on.

The command area is used for operations such as transferring position data and system parameters by using IOWR to write specified data to specified addresses.

G-language Programming (MC Programs)

G-language programs are executed by operation commands in the PLC interface area, and they control MC Unit positioning. They are created using CX-Motion and then transferred to the MC Unit.

Internal Memory and Flash Memory

System parameters, position data, and G-language programs stored in internal memory can be saved to flash memory by means of data save commands

from the CPU Unit or CX-Motion. The saved data is then automatically read to internal memory when the MC Unit is powered up or restarted.

1-6-3 Internal Block Diagram

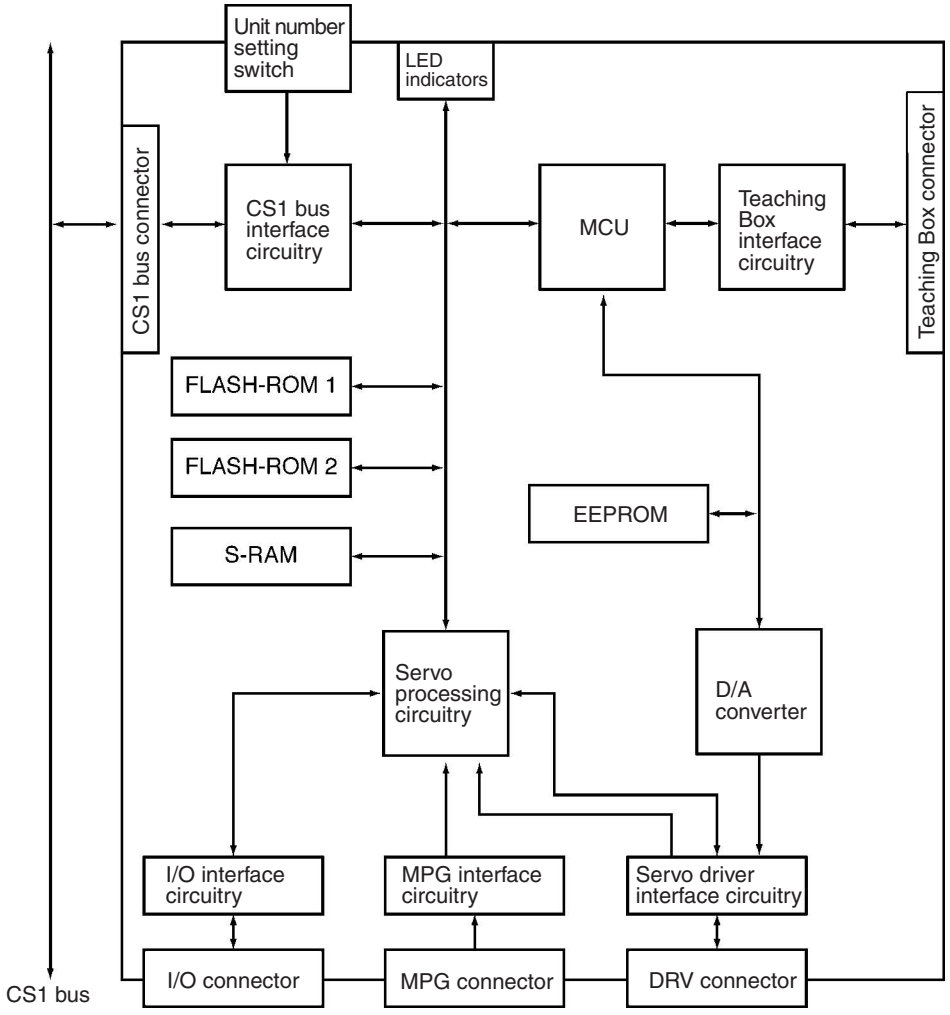

Name	Explanation
MCU	Microcomputer for system control
FLASH-ROM1	Memory for storing system programs
FLASH-ROM2	Memory for storing G-language programs, system parameters, and position data
S-RAM	Memory for temporarily saving and executing G-language programs, system parameters, and position data
EEPROM	Error log

Note G-language programs, system parameters, and position data transferred to the MC Unit are temporarily saved to the internal memory (S-RAM). They can be saved to flash memory (FLASH-ROM 2) by means of data save commands from CX-Motion, the Teaching Box, or the CPU Unit. Be sure to save them to flash memory before turning the power OFF.

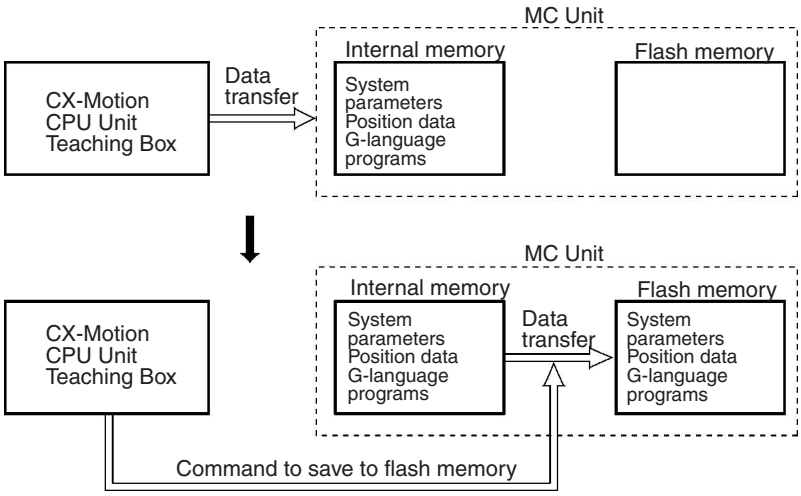

1-6-4 Data Transfer Overview

There are three ways to transfer data between the CPU Unit and the MC Unit, as shown below.

1,2,3... 1. The CX-Motion can be used to transfer data to or from the MC Unit via the CPU Unit.

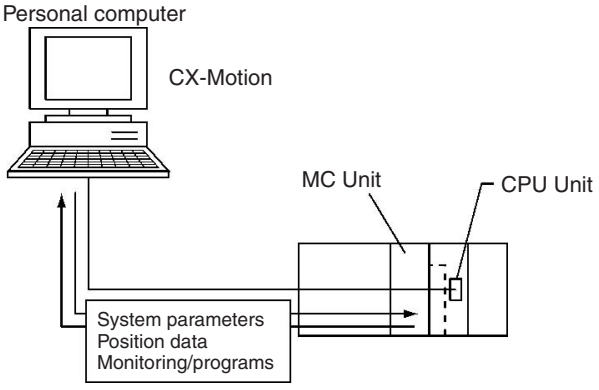

2. Data can be read or written by directly specifying MC Unit RAM addresses in IORD or IOWR instructions in a ladder diagram program.

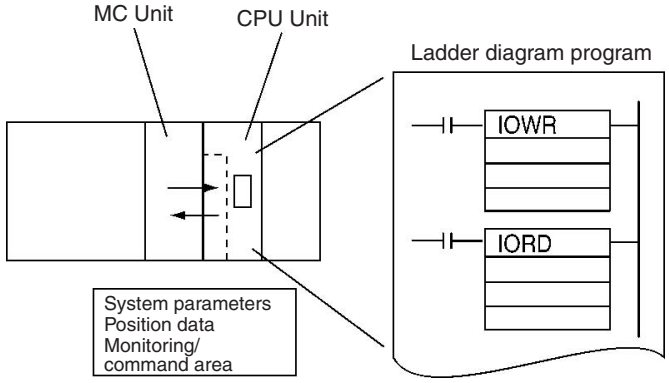

   Use IORD and IOWR instructions to change or read data while the CPU Unit operations are in progress.

3. Position data can be transferred indirectly by using IOWR in a ladder diagram program to write specified data to the MC Unit's command area. Up to 2,000 data items (6,000 words) can be transferred in this way.

For details, refer to *SECTION 4 Data Transfer and Storage.*

1-7 Overview of G-language Programs in the MC Unit

1-7-1 Programs and Tasks

The CS1W-MC421 MC Unit can execute up to four tasks (tasks 1 to 4), and the CS1W-MC221 can execute one or two (tasks 1 to 2). (A task is a unit of execution for a program.)

By executing two or four tasks at the same time, the MC Unit can perform the same functions as two or four controllers.

The number of tasks and axes to be used are set in advance using CX-Motion to edit unit parameters.

Number of Tasks and Axes

The X and Y axes can be used with the CS1W-MC221, and the X, Y, Z, and U axes can be used with the CS1W-MC421. Each axis can be used in only one task, i.e., any axis assigned to one task cannot be used in another task.

Example: 4 Tasks and 4 Axes

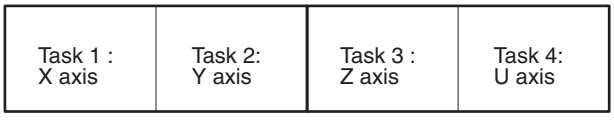

Example 2: 2 Tasks and 3 Axes



Example 3: 2 Tasks and 4 Axes



Example 4: 1 Task and 2 Axes

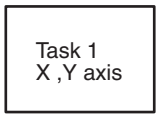

The task configuration (axis configuration, number of tasks, and task axis statements) is set by the unit parameters within the system parameters. (For details, refer to *3-3 System Parameters*.

Note The following table shows the factory settings for the task configuration (axis configuration, number of tasks, and task axis statements). When using any other task configuration, be sure to set these as the initial settings.

Default Task Configuration

Item	CS1W-MC421	CS1W-MC221
Axis configuration	4 axes	2 axes
Number of tasks	1	1
Task axis statement (for task 1)	X, Y, Z, and U axes	X and Y axes
Task axis statement (for task 2)	Not used.	Not used.
Task axis statement (for task 3)	Not used.	Not used.
Task axis statement (for task 4)	Not used.	Not used.

MC programs are managed according to the number of tasks, so it will be necessary to rewrite the program if the task configuration is changed after the program has been created. For details on changing the task configuration, refer to *Section 3-2 Determining the Task Configuration*.

Tasks and Blocks

The MC Unit is capable of storing a total of 2,000 blocks of programming. The maximum number of blocks that can be executed in each task depends on the number of tasks as shown in the following table. These figures include subroutines.

Number of tasks	Maximum number of blocks (CS1W-MC421)	Maximum number of blocks (CS1W-MC221)
1	2,000 blocks	2,000 blocks
2	1,000 blocks/task	1,000 blocks/task
3	666 blocks/task	---
4	500 blocks/task	---

Note Up to 800 blocks can be used in one program, including subroutines.

Tasks and Programs

A maximum of 100 programs can be managed by the MC Unit. The number of programs that can be managed per task depends on the number of tasks as shown in the following table. These figures include subroutines.

Number of tasks	Maximum number of programs (CS1W-MC421)	Maximum number of programs (CS1W-MC221)
1	100 programs	100 programs
2	50 programs/task	50 programs/task

Number of tasks	Maximum number of programs (CS1W-MC421)	Maximum number of programs (CS1W-MC221)
3	33 programs/task	---
4	25 programs/task	---

Note The same program number cannot be used for different tasks.

1-7-2 Manual and Automatic Operation

Each task of the MC Unit can be executed either in Manual or Automatic Mode. In the Automatic mode, MC programs created in the G language are executed. In the Manual mode, manual commands from the CPU Unit or the Teaching Box are executed.

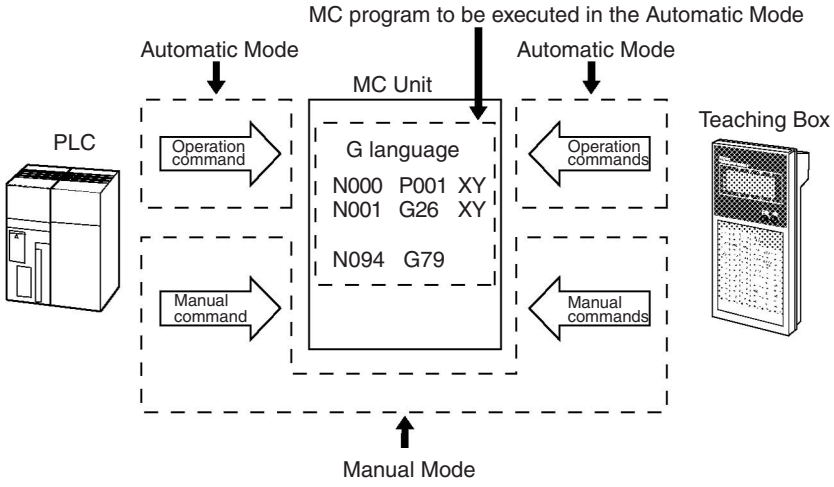

The PLC interface area is used for executing the commands in the Manual Mode or the MC program in the Automatic Mode.

There are 11 manual commands, including the deceleration stop, origin search, reference origin return, and jogging commands, etc. For detail on using these commands, refer to *5-2 Controlling the MC Unit from the CPU Unit*.

Manual Commands (from the CPU Unit)

Command	Description
DECELERATION STOP	Decelerates and stops a moving axis.
ORIGIN RETURN	For determining origins of mechanical system when using an INC encoder.
REFERENCE ORIGIN RETURN	For returning to the reference origin.
JOG	For moving the axis at a fixed feed rate.
RESET ERROR COUNTER	Resets the error counter (accumulated pulses) to 0.
FORCED ORIGIN	Forcibly sets the motor's current stop position to 0, and establishes it as the origin.
SET ABSOLUTE ORIGIN	Sets the present position as the origin for the absolute encoder.
ENABLE MPG	Takes input pulses from the MPG and executes MPG operation.
SERVO-LOCK	Places the axis in servo-lock status.
SERVO-UNLOCK	Places the axis in servo-unlock status.
PRESET PRESENT POSITION	Sets the present position to any given value.

Operations from the Teaching Box

The following table shows the operations that can be performed using the Teaching Box.

Operation		MC Unit operating mode		
		T.Box control	**T.Box enabled**	**T.Box occupy**
Monitoring	Present values	O	O	O
	I/O signals	Δ1	O	O
	Errors	O	O	O
	Position data	Δ2	O	O
	Phase-Z margin	O	O	O
	Servo parameters	O	O	O
Origin search		X	O	O
Program execution		X	O	O
Jogging		X	O	O
Handle feeding		X	O	O
Extension	Mode	O	O	O
	Servo-lock/ servo-unlock	X	O	O
	Memory protection	X	O	O
	Absolute origin setting	X	O	O
	Teaching Box message change	O	O	O
	Saving	X	O	O
Override		Δ3	O	O
Teaching		X	O	O
Deceleration stop		X	O	O
Error reset		X	O	O

O: Can be used.
X: Cannot be used.
Δ1: Output signal ON/OFF status, analog output data, or other data is only monitored and cannot be changed.
Δ2: Position data is only monitored and cannot be changed.
Δ3: Override values are only monitored and cannot be changed.

1-7-3 G Language

The G language is used widely in position control and its main feature is that it is very easy to write for programming. Program functions can be entered simply by entering a “G” and a 2-digit numerical code, then adding any needed parameters. G-language codes G00 through G91 are used in the MC Units. For example, the function “PTP control positioning” is assigned to G00.

Note Refer to *Section 1-7-4 G-language Codes* for a table showing the functions assigned to the G-language codes. For details on programming, refer to the *CX-Motion Online Help*.

Example Program

The following diagram shows the format of a basic G-language program.

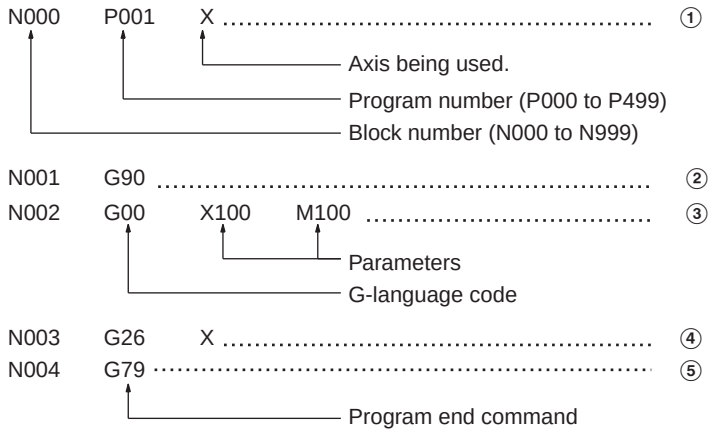

Block Numbers

Programs are composed of blocks, which are distinguished by block numbers N000 through N999. Block numbers are equivalent to the program's line numbers.

Always declare the program number and axis in block number N000 (①).

Program Numbers

Program numbers range from P000 through P499. The program shown above begins with block number N000 (①) and ends with the block (N004) that contains the program end command, G79.

Subroutines have program numbers ranging from P500 through P999, and end with a subroutine end command, G73.

The number of blocks and number of programs are the total numbers of blocks and programs being used. A maximum of 100 programs and 2,000 blocks can be used in the MC Unit. A maximum of 800 blocks can be used in any one program.

G-language Codes

Code G00 in line ③ is a G-language code representing the PTP control positioning function.

Arguments

Positions are input as arguments. In this example "X100" has been input to indicate 100 on the X-axis.

The next argument, "M100," outputs M-code 100 when the positioning to X100 has been completed.

Some commands, such as G90 in line ②, don't require arguments. The absolute specification command (G90) indicates that coordinates are to be treated as absolute coordinates.

Format

The following table explains the contents of the MC program.

Line	MC program blocks	Function
①	N000 P001 X	Declares program number (001) and the axis being used (X).
②	N001 G90	Specifies positioning by absolute coordinates.
③	N002 G00 X100 M100	Moves to X-axis coordinate 100. Outputs M-code 100 when positioning is completed. Executed the next block with the M Code Reset Command from the CPU Unit.
④	N003 G26 X	Returns to the reference origin.
⑤	N004 G79	Ends the MC program.

The following diagram shows the operation of the example program.

Operation

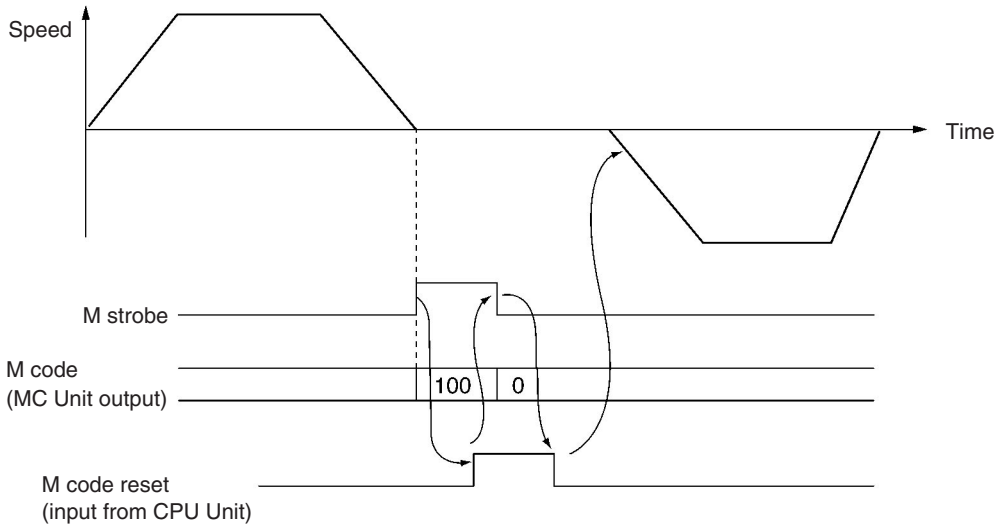

1-7-4 G-language Codes

The following table provides a summary and brief description of the G-language commands. For a more detailed explanation, refer to *SECTION 7 G-language Programming*.

Code	Name	Function	Page
G00	POSITIONING	Positions up to 2 or 4 axes simultaneously with PTP control at the maximum feed rate.	384
G01	LINEAR INTERPOLATION	Performs linear interpolation on 1, 2, 3, or 4 axes (1 or 2 axes for MC221). The specified axes move simultaneously. The feed rate can be specified.	385
G02	CIRCULAR INTERPOLATION (CLOCKWISE)	Performs 2-axis circular interpolation in the clockwise direction at the specified interpolation feed rate.	388
G03	CIRCULAR INTERPOLATION (COUNTER-CLOCKWISE)	Performs 2-axis circular interpolation in the counterclockwise direction at the specified interpolation feed rate.	388
G04	DWELL TIMER	Waits for the specified length of time.	395
G10	PASS MODE	Performs operations one-by-one in sequence without waiting for deceleration to stop.	396
G11	STOP MODE	Performs the next operation after completing positioning.	398
G13 (See note 1.)	IN-POSITION CHECK OFF MODE	Starts the next operation without waiting for positioning to be completed.	399
G17	CIRCULAR PLANE SPECIFICATION (X-Y)	Sets the X-Y plane as the plane for circular interpolation.	400
G18 (See note 2.)	CIRCULAR PLANE SPECIFICATION (X-Z)	Sets the X-Z plane as the plane for circular interpolation.	400
G19 (See note 2.)	CIRCULAR PLANE SPECIFICATION (Y-Z)	Sets the Y-Z plane as the plane for circular interpolation.	400
G20 (See note 2.)	CIRCULAR PLANE SPECIFICATION (X-U)	Sets the X-U plane as the plane for circular interpolation.	400

Code	Name	Function	Page
G21 (See note 2.)	CIRCULAR PLANE SPECIFICATION (Y-U)	Sets the Y-U plane as the plane for circular interpolation.	400
G22 (See note 2.)	CIRCULAR PLANE SPECIFICATION (Z-U)	Sets the Z-U plane as the plane for circular interpolation.	400
G26	REFERENCE ORIGIN RETURN	Moves to the reference origin.	402
G27	WORKPIECE ORIGIN RETURN	Moves to the workpiece origin.	403
G28	ORIGIN SEARCH	Performs an origin search on the specified axis.	404
G29	ORIGIN UNDEFINED	Sets the origin to an undefined state.	405
G30	SPEED CONTROL	Feeds up to 2 axes simultaneously at the controlled feed rate.	405
G31 (See note 1.)	INTERRUPT FEEDING	Performs an interrupt feeding operation.	406
G32 (See note 1.)	TRAVERSE	Executes traverse operation.	412
G50	SELECT REFERENCE COORDINATE SYSTEM	Specifies the reference coordinate system.	416
G51	SELECT WORKPIECE COORDINATE SYSTEM	Specifies the workpiece coordinate system.	417
G53	CHANGE WORKPIECE ORIGIN OFFSET	Changes the origin of the workpiece coordinate system.	418
G54	CHANGE REFERENCE COORDINATE SYSTEM PV	Changes the present value in the reference coordinate system.	419
G60	ARITHMETIC OPERATIONS	Performs arithmetic operations on numerical values, position data, and registers.	420
G63	SUBSTITUTION	Substitutes numerical values, position data, or registers into other position data or registers.	421
G69 (See note 1.)	CHANGE PARAMETER	Changes the specified parameter.	421
G70	UNCONDITIONAL JUMP	Unconditionally jumps to the specified block.	423
G71	CONDITIONAL JUMP	Jumps to the specified block when the condition is met.	424
G72	SUBROUTINE JUMP	Calls the specified subroutine.	424
G73	SUBROUTINE END	Ends the subroutine.	425
G74	OPTIONAL END	Ends the block currently being executed when the specified optional input is ON.	425
G75	OPTIONAL SKIP	Skips the block after this command when the specified optional input is ON.	427
G76	OPTIONAL PROGRAM STOP	Pauses the program when the specified optional input is ON.	428
G79	PROGRAM END	Ends the main program.	429
G90	ABSOLUTE SPECIFICATION	Positions with absolute coordinates when performing axis operations.	430
G91	INCREMENTAL SPECIFICATION	Positions with relative coordinates when performing axis operations.	430

Note 1. This command is either new for CS1W-MC221/MC421 MC Units, or the specifications have been changed from earlier MC Units.

2. The CS2W-MC221 MC Unit does not have this command.

Auxiliary Codes

Code	Name	Function
M	M code	Outputs an M code.
D (See note.)	D code	Starts an external interrupt task for the CPU Unit.

Note D codes are either new for CS1W-MC221/MC421 MC Units, or the specifications have been changed from earlier MC Units.

1-8 Commands Listed According to Purpose

Purpose	Command/Function	Page
To speed up winding operations.	TRAVERSE (G32)	336, 412
To speed up pick-and-place operations (by starting the next operation without waiting for positioning to be completed).	Use IN-POSITION CHECK OFF MODE (G13).	342, 399
To use multiturn circular interpolation or helical circular interpolation (for winding machine operations, etc.).	CIRCULAR INTERPOLATION (CLOCKWISE) or CIRCULAR INTERPOLATION (COUNTERCLOCKWISE) (G02/G03)	331, 388
To start a CPU Unit interrupt task when positioning is completed or when passing through a specified position (with high-speed synchronization between the ladder diagram program and the MC Unit).	Interrupt notification (D code output)	348, 438
To control an axis in a fixed direction (for a turntable or fixed-direction conveyer).	Unlimited feeding function	370
To refresh the present position in a 360° range, for example, during unlimited feeding (remembering the number of turns).		370
To speed up feeding for axes using the MPG (Manual Pulse Generator).	Electronic gear function: Multiplication of numerator and denominator for MPG/sync encoder, and electronic gear function ON/OFF switch	365
To synchronize axis feeding with a device such as a conveyer.		365
During interrupt feeding, to execute positioning even when no interrupt signal is input.	INTERRUPT FEEDING (G31).	334, 406
To change speeds during operation (during PTP control, linear interpolation, or circular interpolation).	Override function	349
After a fixed amount of axis movement during operation, to notify the CPU Unit of interrupts, and so on, without stopping operation. (Improving tack time by controlling an external device before the operation has been completed.)	Stopover function (M code or D code output at a given present position)	279, 299, 346
To perform an origin search to simplify absolute encoder adjustment operations (replacing motor, mechanical system belts, decelerator, etc.).	Absolute encoder system origin search function	Sec. 9
To shorten the origin search time.	Use origin search pattern 2.	472
To stop smoothly for CW and CCW inputs during origin search.	Either deceleration stop or accumulated pulse stop can be selected.	471
To turn the motor, or to stop.	Servo-lock, servo-unlock function	293, 296, 353
To forcibly set the error counter to 0 when no speed reference is provided to the servo driver (when a deceleration reference has finished being output). Example: molding machine press control.	Error counter reset function	284, 351
To change servo system parameters (acceleration deceleration time, position loop gain, in-position, etc.) during operation. Example: Increasing the accuracy of circular interpolation with position loop feedback gain.	Changing servo system parameters: Use CHANGE PARAMETER (G69).	345, 421

Purpose	Command/Function	Page
To trace servo system information (speed reference values, present speed, error counter) for a fixed period.	Servo data trace using CX-Motion	CX-Motion
To use multiple programs and position data. To manage personal computer memory devices as internal MC Unit memory.	Automatic loading function: When using CX-Motion, programs and data are automatically downloaded from the personal computer to the MC Unit as required (directed by the CPU Unit).	359, CX-Motion

1-9 Comparison with Earlier MC Unit Model

The following table shows the points of difference between the CS1W-MC221/MC421 and C200H-MC221 MC Units.

Item	CS1W-MC221/MC421	C200H-MC221
Number of control axes	2 or 4 axes	2 axes only
Binary indications (PLC interface area)	All binary (present position, program number, block number, M code, override, error code)	BCD
Encoder response frequency	500 kp/s (before multiplication)	250 kp/s (before multiplication)
Encoder pulse ratio	1, 2, or 4 times	4 times only
Program capacity	2,000 blocks	800 blocks
Acceleration/deceleration time	0 to 100.000 s	0 to 9.999 s
Speed reference range	1 pps to 2,000 kp/s	1 pps to 1,000 kp/s
Start time	2-axis Units: 8 ms max. 4-axis Units: 12 ms max. (See note.)	2-axis Units: 12 ms max.
Optional inputs	Optional No. 0 to 15: Inputs from CPU Unit Optional No. 16 to 19: General inputs 1 to 4	Optional No. 0 to 4: Inputs from CPU Unit Optional No. 5 and 6: General inputs 1 and 2
General outputs, brake signal outputs	Four output signals are provided, and can be selected.	No output signals are provided.
MPG signals	500 kp/s max. (before pulse ratio of 1, 2, or 4)	Y axis instead of MPG
Circular interpolation (G02, G03)	Multiturn circular interpolation can be set.	Within one turn only.
Helical circular interpolation	With 4-axis Units, 2-axis circular interpolation on a plane + 1-axis feed control is possible.	Not supported.
Traverse command (G32)	A 2-axis traverse operation is available, with a traverse time of 4 ms max.	Not supported.
Unlimited Feed Mode	Unlimited feeding can be either specified or not specified for an axis. (The software limit is ignored.)	Cannot be specified.
Present position display for unlimited feeding	When unlimited feeding is specified for an axis, the software limit is ignored. The present position refresh range can be set.	Not supported.

Note Two-axis MC Unit:
This function applies to the X axis when a 2-axis, 1-task configuration is used.

Four-axis MC Unit:
This function applies to the X axis when a 4-axis, 1-task configuration is used.

Item	CS1W-MC221/MC421	C200H-MC221
Interrupt feeding (G31)	Positioning is possible even without any interrupt signal.	Speed control remains in effect when there is no interrupt signal.
Override	The feed rate can be changed during G00, G01, G02, G03, G26, G27, G30, G31, and G32 operations (except for pass operations).	The feed rate cannot be changed during operation.
Backlash setting range	0 to 10,000 pulses	0 to 999 pulses
In-position setting range	0 to 10,000 pulses	0 to 999 pulses
Zone setting	Conditions for using zones: Use only when origin is determined, or regardless of whether or not origin is determined. The initial setting is for zones to be used only when the origin is established.	Use regardless of whether or not the origin is established.
Origin search	Can be executed even when an absolute encoder is used. Parameter can be set to shorten origin search time. Either deceleration stop or accumulated pulse stop can be selected for when CW or CCW limit is detected.	Cannot be executed when an absolute encoder is used. Not possible to select deceleration stop or accumulated pulse stop for when CW or CCW limit is detected.
Forced origin	Present position can be forcibly set to 0, and established as the origin. (In an absolute encoder system, only the MC Unit's present position is set to 0.)	The present position is set to 0 by the present position preset function.
Absolute encoder origin setting	The absolute encoder origin can be set even while servo-lock is in effect.	Origin is set by either the absolute-value initial setting or the absolute-value software reset function. (It cannot be set while servo-lock is in effect.)
Electronic gear function	The numerator and denominator can be set.	Integers only
IN-POSITION CHECK OFF command (G13)	After a positioning command output has been completed, this command lets the next operation start without waiting for positioning to be completed.	Not supported.
Error counter reset	The error counter can be reset for each axis.	Not supported.
D code (interrupt code)	Can be used for notifying of the CPU Unit of interrupts.	Not supported.
Stopover function (Code output during axis movement)	An M code or D code can be output after a fixed amount of axis movement during operation.	Not supported.
Acceleration/deceleration time setting for pass operations	Either the acceleration or deceleration time of the previous operation can be selected for pass operations.	Pass operations are executed with the acceleration time.
Fixed acceleration mode for pass operations	A fixed acceleration mode is added for when pass operations are executed for one axis only.	Fixed acceleration time mode only

Item	CS1W-MC221/MC421	C200H-MC221
Servo system parameter changes (G code: G69)	Servo system parameters can be changed by a G code.	Not supported.
Servo-lock	There is a brake signal timing adjustment function.	There is no brake signal timing adjustment function.
Servo-unlock	There is a brake signal timing adjustment function. Servo-unlock can be used at any time.	There is no brake signal timing adjustment function. Servo-unlock cannot be used while other manual commands are being executed.
Error log	Up to 20 items can be saved.	Not supported.
Absolute value initial setting	Integrated with absolute origin setting.	Not supported.
Absolute value software reset		Not supported.
MPG Operating Flag	Busy signal is used instead.	Not supported.
Servo data trace function	Traces servo data. Can be used with CX-Motion.	Not supported.
Data transfer method	All data is transferred using IORD or IOWR.	Data is transferred by means of either I/O transfers or IORD/IOWR.
Present position preset	Executed by IOWR.	Executed by special interrupt bit.
Setting teaching address	Executed by IOWR.	Executed by special interrupt bit.
Saving to flash memory	Executed by IOWR.	Executed by special interrupt bit.
Emergency stop method	Stopped by accumulated pulse method or by operation command output turning OFF after a 0 V output.	Stop by turning OFF operation command output.
Automatic loading	G-language programs and position data are downloaded from a personal computer by means of commands from the CPU Unit, used in combination with CX-Motion.	Not supported.

1-9-1 Changing From the C200H-MC221 to the CS1W-MC421/MC221

Be careful of the following points when changing over from the earlier MC Unit, the C200H-MC221, to either a CS1W-MC421 or CS1W-MC221 MC Unit.

Position Data

C200H-MC221 data can be used as is.

G-language Programming

The optional numbers are changed as shown below, so revise them in the programs. All other C200H-MC221 programming can be used as is.

C200H-MC221: Optional numbers 0 to 6 (Numbers 5 and 6 correspond to general inputs 1 and 2.)

CS1W-MC421/MC221: Optional numbers 0 to 19 (Numbers 16 to 19 correspond to general inputs 1 to 4.)

Ladder Diagram Programming

The data area allocations are as follows for the C200H-MC221:

PLC Interface Area
(Each Unit uses two unit numbers.)

IR 100 to IR 119	Unit #0
to	to
IR 180 to IR 199	Unit #8

Expansion Data (DM Area or EM Area)

Data transfer area specification for I/O transfer instruction
Error code status, etc.

Allocated DM Area
(Each Unit uses two unit numbers.)

DM 1000 to DM 1001
DM 1100 to DM 1101
to
DM 1800 to DM 1801

Transfer Data (DM Area or EM Area)

Position data (3 words each)

The data area allocations are as follows for the CS1W-MC421 and CS1W-MC221. The words allocated DM Area and EM Area are not used. The bit allocations within words are also different, so the ladder diagram programs must be revised.

CS1W-MC421
(Each Unit uses five unit numbers.)

CIO 2000 to CIO 2029	Unit #0
to	to
CIO 2910 to CIO 2959	Unit #91

CS1W-MC221
(Each Unit uses three unit numbers.)

CIO 2000 to CIO 2029	Unit #0
to	to
CIO 2930 to CIO 2959	Unit #93

1-10 Basic Operating Procedure

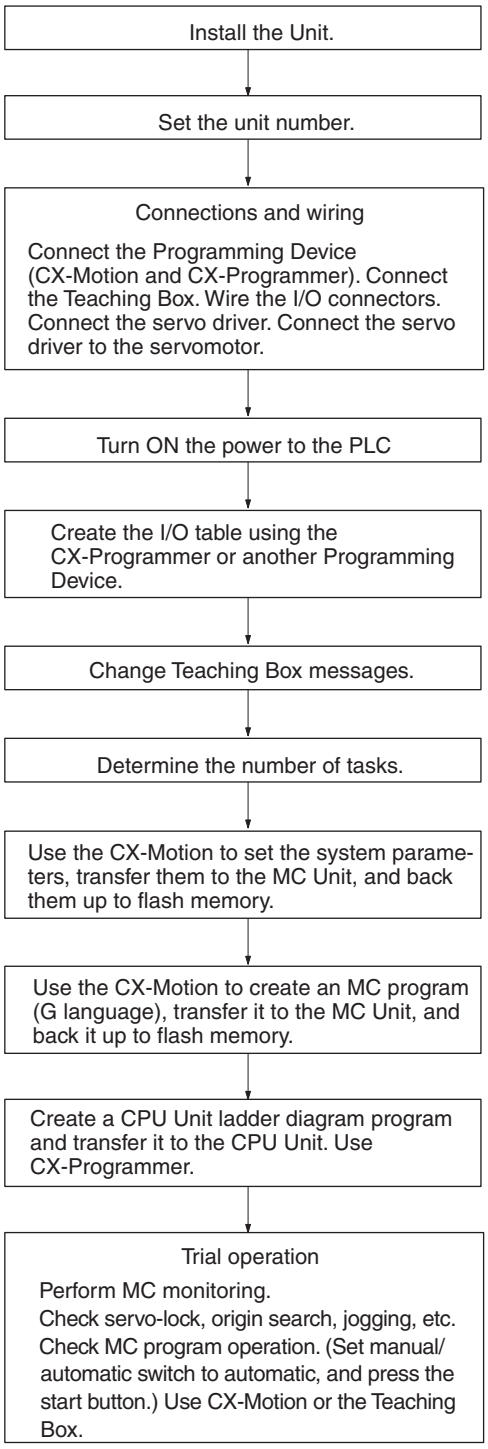

1-11 Methods for Using MC Unit Functions

There are three methods for using MC Unit functions:

1,2,3...

1. G-language programs (MC programs)
2. Commands from the CPU Unit to the MC Unit using the PLC interface area.
3. Setting system parameters (using CX-Motion or IOWR).

Note The PLC interface area allocations are examples based on the CS1W-MC221 (X and Y axes, tasks 1 and 2). For the CS1W-MS421, refer to *Section 5-1-1 PLC Interface Area*.

Function	Method			Page
	MC program (G language)	PLC Interface Area	System parameters	
Positioning with linear interpolation	O (G01), Automatic	---	---	385
Positioning with circular interpolation	O (G02, G03), Automatic	---	---	388
Positioning with helical circular interpolation	O (G02, G03), Automatic	---	---	388
Traverse execution	O (G32), Automatic	---	---	412
Speed control	O (G30), Automatic	---	---	405
Interrupt feeding	O (G31), Automatic	---	---	406
Pass Mode	O (G10), Automatic	---	---	396
Specifying operations in Pass Mode	---	---	O (4008), Automatic	158, 171
Stop Mode	O (G11), Automatic	---	---	398
Dwell timer setting and execution	O (G04), Automatic	---	---	395
In-position Check OFF Mode	O (G13), Automatic	---	---	399
In-position setting	---	---	O (4601/4626), Automatic/ Manual	169, 186
Stopover function	O (G00, etc.), Automatic	---	---	440
Workpiece origin return	O (G27), Automatic	---	---	403
Interrupts to CPU Unit	O (D code output), Automatic	---	---	348, 438
Position loop gain setting	O (G69), Automatic	---	O (4602/4627), Automatic/ Manual	345, 421
Cycle start	---	O (Word n+3/5, bit 02), Automatic	---	268
Single block	---	O (Word n+3/5, bit 03), Automatic	---	272
Pause	---	O (Word n+3/5, bit 05), Automatic	---	274
Forced block end	---	O (Word n+3/5, bit 04), Automatic	---	273
Origin search	O (G28), Automatic	O (Word n+7/9, bit 01), Manual	---	281, 404
Reference origin return	O (G26), Automatic	O (Word n+7/9, bit 02), Manual	---	282, 402
Override setting	---	O (Word n+7/9, bit 12), Automatic/Manual	---	279, 299

Function	Method			Page
	MC program (G language)	PLC Interface Area	System parameters	
Error counter reset	---	O (Word n+7/9, bit 04), Automatic/Manual	---	284
Driver alarm reset	---	O (Word n+7/9, bit 11), Automatic/Manual	---	298
M code reset	---	O (Word n+3/5, bit 06), Automatic	---	275
Teaching	---	O (Word n+3/5, bit 09), Automatic/Manual	---	277, 278
Jogging	---	O (Word n+7/9, bit 03), Manual	---	283
Deceleration stop	---	O (Word n+7/9, bit 00), Manual	---	280
Forced origin	---	O (Word n+7/9, bit 05), Manual	---	290
Absolute origin setting	---	O (Word n+7/9, bit 06), Manual	---	291
Servo-lock	---	O (Word n+7/9, bit 09), Manual	---	293
Servo-unlock	---	O (Word n+7/9, bit 10), Automatic/Manual	---	296
Trapezoidal/S-curve specification	---	---	O (4405/4430), Automatic/Manual	164, 183
Zone setting	---	---	O (4500 to 4516/4525 to 4541), Automatic/Manual	167, 184
Backlash correction	---	---	O (4604/4629), Automatic/Manual	169, 356
Origin search time shortening	---	---	O (4216/4241), Automatic/Manual	161, 472
Origin deceleration method setting (selection of deceleration stop or accumulated pulse stop)	---	---	O (4217/4242), Automatic/Manual	162, 471
Electronic gear function	---	---	O (4410/4417), Manual	165, 365
Unlimited Feed Mode	---	---	O (4201/4226), Automatic/Manual	159, 370
Brake ON or OFF time setting	---	---	O (4006, 4605/4606, 4630/4631), Automatic/Manual	157, 169, 187
Handle feeding	---	O (Word n+7/9, bit 08)	---	292, 301

1-12 Overview of Version 1 Upgrades

The functions described in this section have been added to the CS1W-MC221-V1 and CS1W-MC421-V1. They are mainly divided into two categories: customized functions and the easy backup function.

Customized Functions

Function	Summary and features	Advantages
Virtual axes	Any axis can be specified for virtual axis operation without connecting to a Servo Driver and Servomotor. A virtual axis can be used as the input axis for the electronic gear function or the electronic cam function to enable using these functions without using an external encoder. 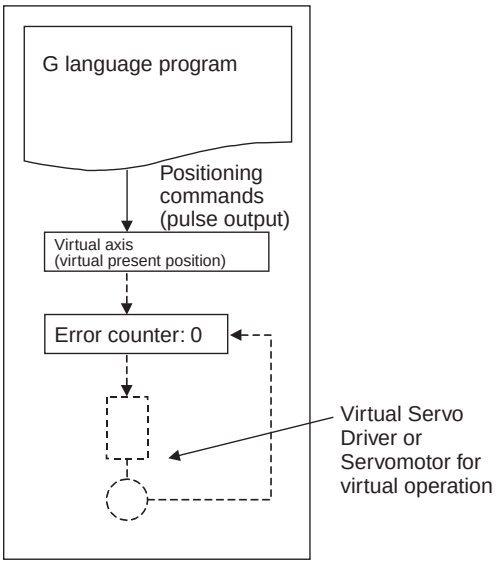	Can be used as the master axis for electronic gear or electronic cam control. Enables operations such as position compensation by integrating a virtual axis.
Electronic gear (CONNECT)	This function synchronizes the operating axis to the input axis at a specified gear ratio. The following options can be selected for the input axis: Virtual axis present position, real axis position command value, real axis encoder feedback input, MPG input, or sync encoder input. The gear ratio can be changed during operation. 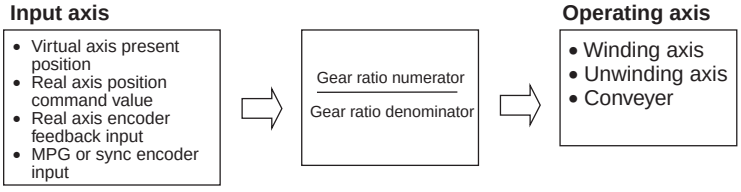	• Can reduce the amount of mechanical equipment required. • Can reduce the man-hours required for mechanical maintenance.

Function	Summary and features	Advantages
Electronic cam (CAMBOX)	This function synchronizes the operating axis with the input axis based on the set cam table. The following options can be selected for the input axis: Virtual axis present position, real axis position command value, real axis encoder feedback input, MPG input, or sync encoder input. There are 720 cam table points. 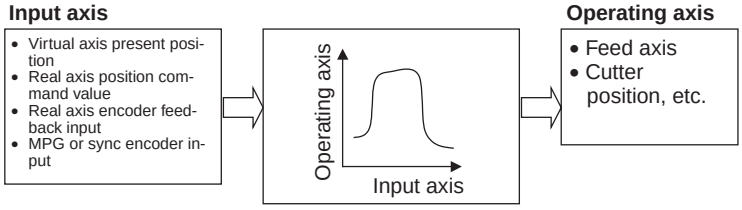	Can improve design efficiency because adjustments are simpler than with mechanical cams.
Note Electronic gear (CONNECT) and electronic cam (CAMBOX)	With an electronic gear (CONNECT) or electronic cam (CAMBOX), the operating axis can be operated by integrating the operation of another axis (including a virtual axis) while synchronizing to the input axis. 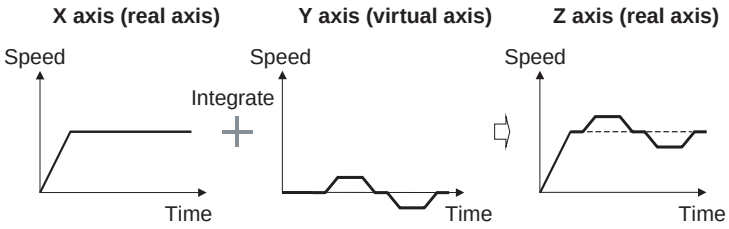	Operations such as position compensation are enabled by integrating a virtual axis.
Electronic cam/gear cancel (CANCEL)	An electronic gear (CONNECT) or the electronic cam (CAMBOX) can be cancelled.	
Register (REGIST) (present position hardware latch)	The present position (encoder) at the leading edge of an external input can be obtained. The present position is recorded by means of a hardware latch, enabling highly accurate compensation. 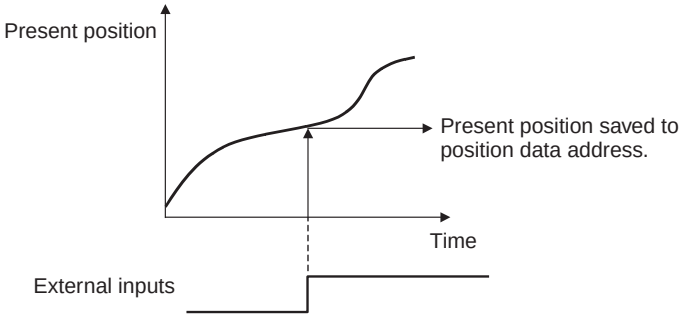	Can be used for purposes such as providing accurate position compensation by means such as marks printed on film.
Linked traverse	G32 commands can be linked across multiple blocks (line numbers). 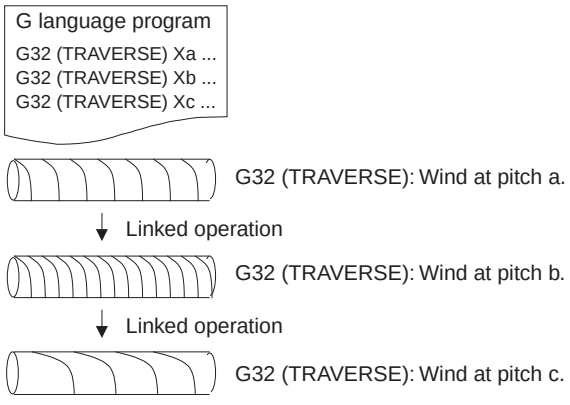	The winding width, number of windings, and pitch can be set for individual layers, enabling complex traverse control.

Function	Summary and features	Advantages
Memory links	The MC Unit's Position Data Area can be linked with words in the CPU Unit's CIO, DM, and EM Areas. Data is refreshed automatically during cyclic refreshing. Data values can be changed when axes are moved by the amount set by means of the stopover function. 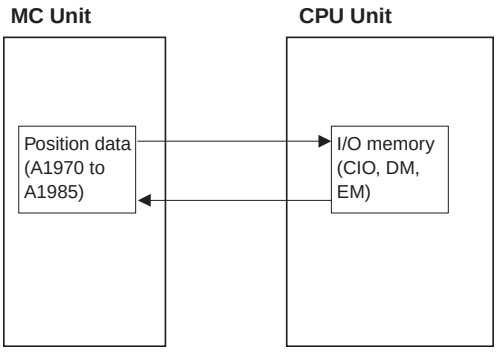	• No ladder programming is required, so program size can be reduced. • Multiple outputs are enabled during servo operation.
M code reset with program execution stopped	Even while program execution is stopped, M codes can be reset from the CPU Unit using allocated memory.	---
High-speed general-purpose outputs	The MC Unit's general-purpose outputs (1 to 4) can be turned ON and OFF according to zone bits. 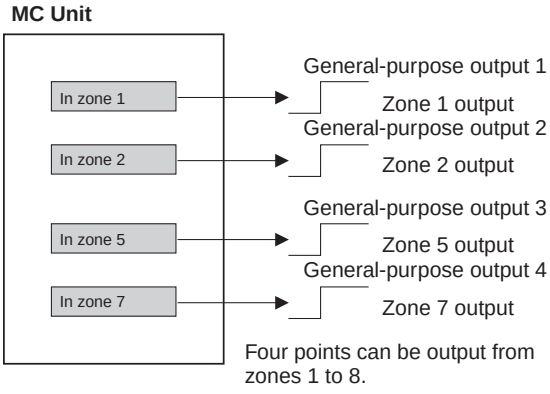	Outputs can be made directly, without going through the CPU Unit, and this enables faster interlock operations. Tact time can be shortened and assembly precision can be improved.

Easy Backup

Function	Summary and features	Advantages
Easy backup	Data stored in the MC Unit's internal flash memory is backed up using the CPU Unit's easy backup operation on a Memory Card mounted in the CPU Unit. It can then be restored from the Memory Card and verified.	The entire system, including MC Unit data, can be backed up.

Override Function Selection

<table>
<tr><th>Function</th><th>Summary and features</th><th>Advantages</th></tr>
<tr><td>Override function selection</td><td>This function enables/disables the override value after turning OFF the Override Setting Bit.
For details on the setting method, refer to 3-6 Command Area.
Enable: The set override value is enabled even after the Override Setting Bit is turned OFF, and operation proceeds with the set override value.
Disable: The override value is disabled after the Override Setting Bit is turned OFF, and operation proceeds with a 100% override.
The override is enabled when the power is turned ON.
<table>
<tr><th>Command area</th><th>R/W</th><th>Address</th><th>No. of words transferred</th></tr>
<tr><td>Override function selection</td><td>W</td><td>17E8 hex (6120)</td><td>0002 hex</td></tr>
</table>
The timing chart is shown below.
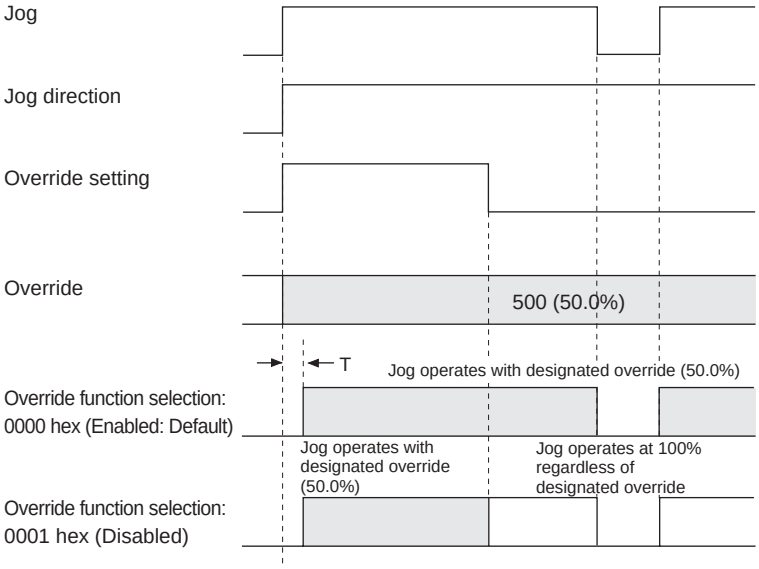

</td><td>The selection to return override to 100%, or not to return it to 100%, is easy to make.</td></tr>
</table>

1-12-1 Using Customized Functions

This section describes setting and using the customized functions.

Overview

The term “customized functions” in this manual indicates the following functions.

- Synchronized control functions (virtual axes, electronic gear, electronic cam, electronic cam/gear cancel function, and register function)
- Linked traverse function
- Memory link function
- M code reset with program execution stopped
- High-speed general-purpose output function

Using Customized Functions

The following table shows how the customized functions are used.

Function		Method of use	
		Set with IOWR instruction in ladder program	**Set with G language**
Synchronized control functions	Virtual axes	Set operand C to FFFF hex and turn ON customized function selection bit 04 (the virtual axes, electronic gear, electronic cam, electronic cam/gear cancel function, and register function enable bit).	Set the virtual axes with the IOWR instruction.
	Electronic gear function (CONNECT)		With G01, specify register E31 and set 1 at the beginning of the operand table.
	Electronic cam function (CAMBOX)		With G01, specify register E31 and set 2 at the beginning of the operand table.
	Electronic cam/gear cancel function (CANCEL)		With G01, specify register E31 and set 3 at the beginning of the operand table.
	Register function (present position hardware latch function)		With G01, specify register E31 and set 4 at the beginning of the operand table.
Linked traverse function		Set operand C to FFFF hex and turn ON customized function selection bit 00 (the linked traverse function enable bit).	Write G32 (TRAVERSE) to multiple blocks.
Memory link function		• Set operand C to FFFF hex and turn ON customized function selection bit 01 (the memory link function enable bit). • Set operand C to 1838, 183A, 183C, and 183E hex, and specify addresses in the CPU Unit's I/O memory.	---
M code reset with program execution stopped		Set operand C to FFFF hex and turn ON customized function selection bit 02 (the bit to enable M code reset with program execution stopped).	None
High-speed general-purpose output function		Set operand C to FFFF hex and turn ON customized function selection bit 03 (the high-speed general-purpose output function enable bit).	For position data A1999, allocate zones to general-purpose outputs.

Using IOWR Instructions in the Ladder Program to Make Settings

Overview

It is necessary to specify, by means of IOWR instructions (operand C: FFFF hex) in the ladder program, whether or not each function is to be used.

To retain compatibility with earlier versions, the customized functions are initially set so that they cannot be used. For any particular function to be used, the setting must be made specifically for that function.

The default settings are for none of the functions to be available for use after powering up or restarting (i.e., they are all set to all-zeros). These settings can be changed by selecting customized functions. The settings can be changed only once after powering up or restarting. If an attempt is made to change them more than once, an error will occur.

Note With the virtual axis function, unlike the customized functions, each axis is specified individually as a virtual axis using an IOWR instruction (operand C: 1840 hex) in the ladder program.

Settings

With the IOWR instruction, set FFFF hex for the control data (C) and write the data to the MC Unit.

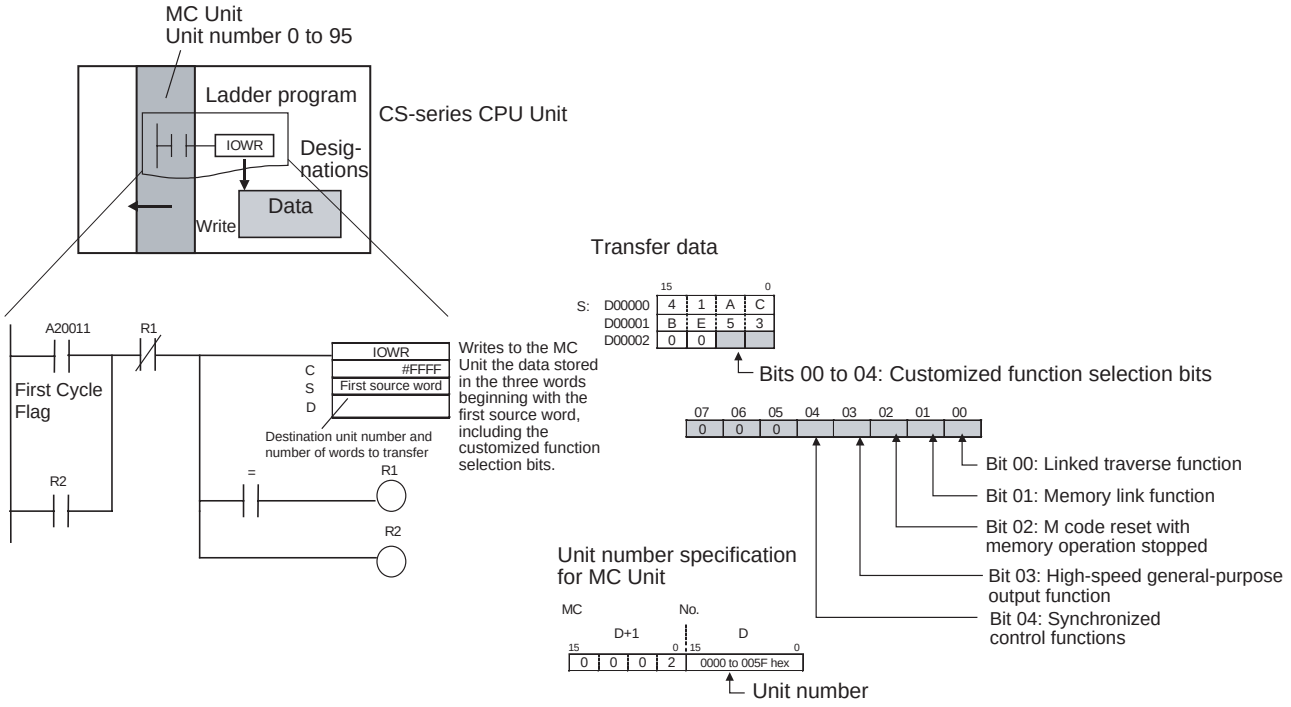

IOWR Instruction Operand Settings

Operand		Set value
C	Control data	FFFF hex (&65535): Customized function selection
S	First source word	Transfer data: S+0: 41AC hex S+1: BE53 hex S+2: Bits 00 to 04: Customized function selection bits 0: Not used; 1: Used Bit 00: Linked traverse function Bit 01: Memory link function Bit 02: M code reset with program execution stopped Bit 03: High-speed general-purpose output function Bit 04: Synchronized control functions (See note.) **Note** Indicates the electronic gear function, electronic cam function, electronic cam/gear cancel function, and register function. 15 12 11 08 07 04 03 00 S+0: 4 1 A C S+1: B E 5 3 S+2: Bits 00 to 04: Customized function selection bits Bits 05 to 15: Reserved for system. (Set to 0.)
D	Destination unit number and number of words to transfer	D+0: MC Unit's unit number, 0 to 95 (0000 to 005F hex) D+1: 0003 hex 15 12 11 08 07 04 03 00 D+0: MC Unit's unit number, 0 to 95 (0000 to 005F hex) D+1: 0 0 0 3 **Note** When input as a constant, D+1 is the leftmost digit and D is the rightmost.

Execution Results

With normal completion, after the IOWR instruction has been executed the Equals Flag turns ON and the selected functions are enabled. Under the following conditions the operation will not be completed normally.

- If an intelligent transfer requested immediately before has not been completed.
- If the Teaching Box is in Enabled Mode or Occupy Mode.
- If a number other than 3 is specified as the number of words to be transferred.
- If the data in words S+0 and S+1 is not correct.
- If executed more than once after powering up or restarting.

The other Condition Flags operate the same as for other addresses used for IORD/IOWR in the MC Unit. (Refer to *Flags on page 210*.)

If an attempt is made to change the settings more than once after powering up or restarting, an IOWR instruction formatting error will occur.

Application Example

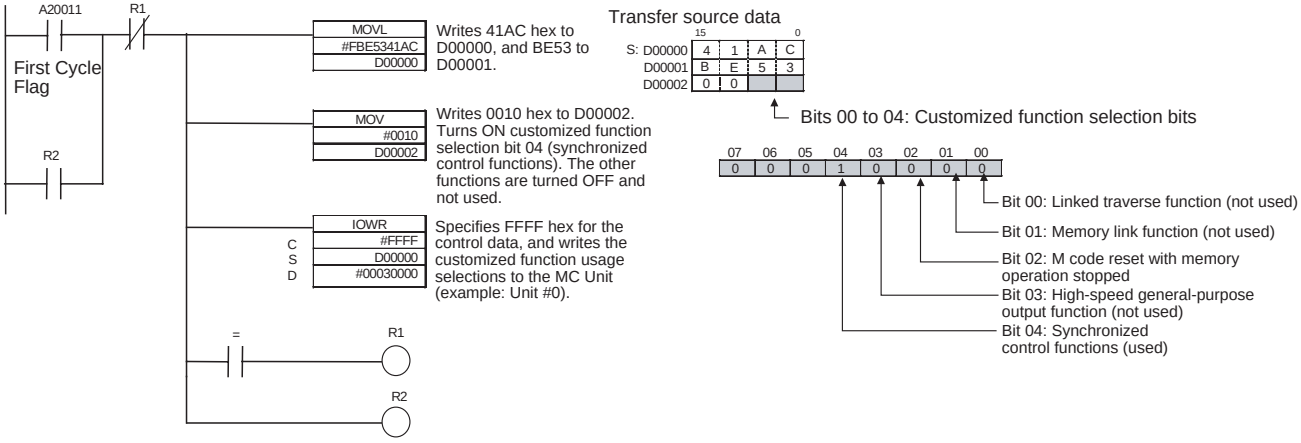

Application Precautions

Set customized function selection bits 05 to 15 to 0 to prevent malfunctioning in the future when new functions are added for these bits.

It is recommended that this function be executed first after the MC Unit is powered up or restarted. If it is executed while an operation related to the function to be enabled is in progress, the function will be enabled in the middle of the operation and may have an undesired effect.

Using G Language to Make Settings (Synchronized Control Functions Only)

When a synchronized control function (i.e., virtual axes, electronic gear, electronic cam, electronic cam/gear cancel function, or register function) is used, normally G01 (the G code for linear interpolation commands) is used, and register E31 is specified (indirectly specifying a position data address from register E31 as the operand).

At the beginning of the indirectly specified operand table, specify which of the synchronized control functions is to be used.

Specifically, use G63 (SUBSTITUTION) and the G01 operating axis (E31) as follows:

Example: Electronic Gear Function

G63 E31 = 1000 ·····Sets the operand table from A1000.

G63 A1000 = 1·····Sets 1000 to 1 (electronic gear function) at the beginning of the operand table.

G63 A1001 = 0·····Sets the parameters in the operand table from A1001 onwards. (Example: Input axis = MPG)

:

;

G01 X(E31) ·····Specifies the X axis as the operating axis, and starts the electronic gear operation.

1-12-1-1 Virtual Axes

This section describes setting and using virtual axes.

Overview

Virtual axes can be used internally by the MC Unit even with no external devices (such as servo drivers, servomotors, or encoders) or external I/O connected.

By executing the IOWR instruction in the CPU Unit's ladder program, the X, Y, Z, or U axis can be specified as a virtual axis.

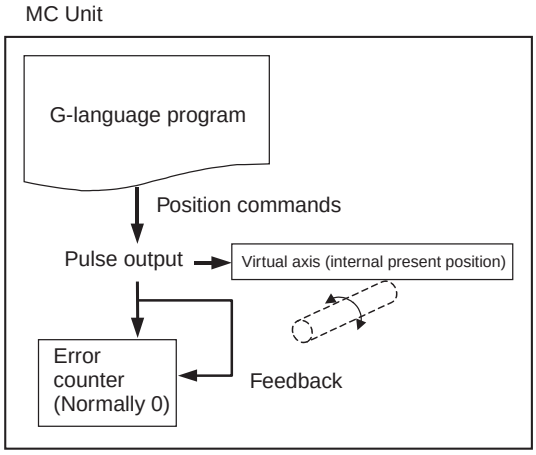

Program design and debugging, and control of synchronized operations, can be simplified by specifying a virtual axis as the input axis for the electronic gear or electronic cam function.

Moreover, in case of slippage in motor or workpiece operations, position compensation can be simplified by setting the compensation amount (i.e., the slippage amount) as the virtual axis target position, and using that with the electronic gear or electronic cam function.

Note Position command values from the virtual axis are automatically returned as feedback from the encoder, making it possible to simulate ideal operating conditions with an error level of zero.

Settings

Virtual axes are used as follows:

Function	Method of use	
	Set with IOWR instruction in ladder program	Set with G language
Virtual axis function	Set operand C to 1840 hex and specify virtual/real axes in other operand.	None

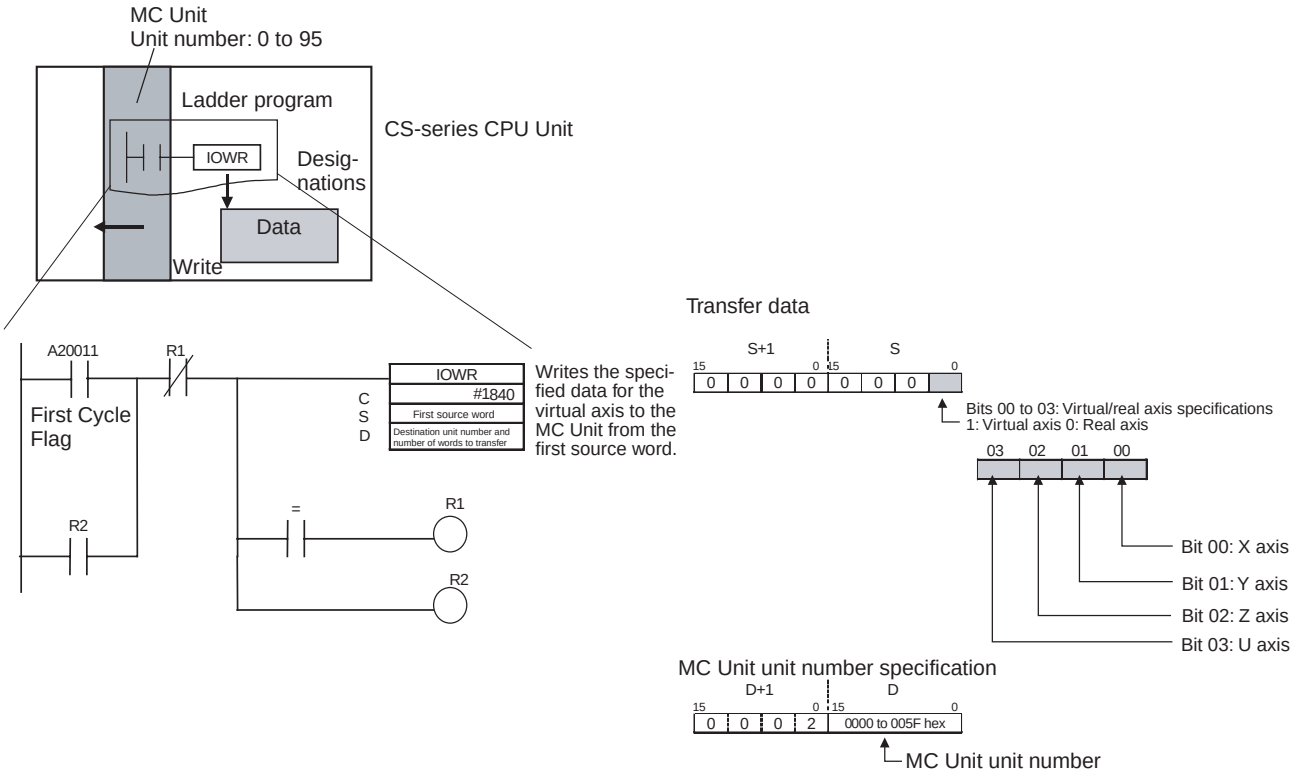

IOWR Instruction Operand Settings

Operand		Setting
C	Control data	1840 hex (&6208): Virtual axis setting
S	First source word	Transfer data: S+0: For each axis (bits 00 to 03), specify whether that axis is to be used normally or as a virtual axis. Bit 00: X axis Bit 01: Y axis Bit 02: Z axis Bit 03: U axis 1: Virtual axis; 0: Normal axis 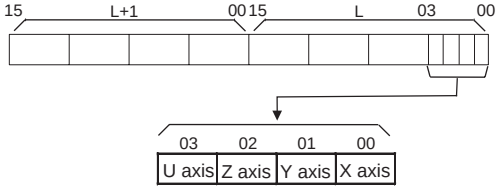 Bits 04 to 15: Reserved for system use. (Set to 0.) S+1: Always 0000 hex.
D	Destination unit number and number of words to transfer	D+0: MC Unit's unit number, 0 to 95 (0000 to 005F hex) D+1: 0002 hex 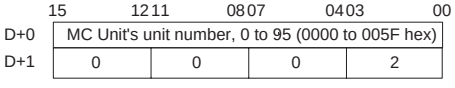 **Note** When input as a constant, D+1 is the leftmost digit and D is the rightmost.

Results

With normal completion, after the IOWR instruction has been executed the Equals Flag turns ON and operation begins according to the settings. If not completed normally, the results are as follows:

Busy (Equals Flag OFF)

- An intelligent transfer requested immediately before has not been completed.
- The Teaching Box is in Enabled Mode or Occupy Mode.

IOWR Format Error (Equals Flag OFF)

- The number of words to be transferred is not 2 words.
- Customized functions (G-code commands for synchronized control functions) are not enabled.

IOWR Data Error (Equals Flag ON)

- The data in S+0 or S+1 is not within the acceptable range.
- One or more of the axes specified by the task axis declaration is servolocked.
- An axis not specified by the task axis declaration is specified as a virtual axis.

The other Condition Flags operate the same as for other addresses used for IORD/IOWR in the MC Unit. (Refer to *Flags on page 210*.)

Wiring and Control

1,2,3...

1. Short-circuit the CW and CCW limit inputs, emergency stop inputs, and alarm inputs of the virtual axis to the 24-V ground.
2. Use the virtual axis with servolock ON. The Servolock Flag will also turn ON.

Operation Specifications

1,2,3...

1. The RUN outputs, SEN signal outputs, and speed references that are output to hardware ports will always be OFF (0). Therefore, axes can still be operated even if devices are connected to external output signals. Also, when system parameters are set for a brake and the outputs are not used as high-speed general-purpose outputs, the general-purpose outputs made to hardware ports will always be OFF (0).
2. Position command values are returned for encoder feedback, making it possible to simulate operating conditions with an error level of zero. Operations can thus be performed with no need to connect an external motor or encoder.

Application Example

Task axis declarations

Task 1: XYZ

Task 2: U

Mechanical specification parameters, encoder classification

U axis: Absolute

Servo-lock status

X axis: Servo unlocked

Y axis: Servo unlocked

Z axis: Servo unlocked

U axis: Servo unlocked

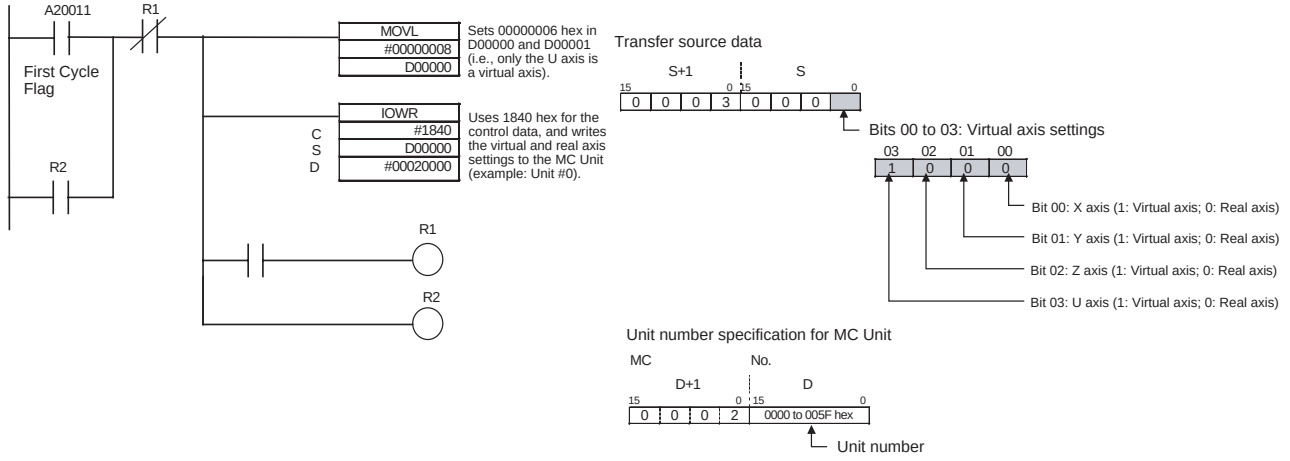

Application Precautions

- If an axis connected to a motor and encoder is temporarily used as a virtual axis, there will be a discrepancy between the real axis position and the position controlled in the MC Unit when the axis is returned to use as a normal axis. Therefore, set the origin before using the axis as a normal axis.
- An error may occur if the power is turned ON with no CW limit input, CCW limit input, emergency stop input, or alarm input signal connected.
- When an absolute encoder is connected, the origin will remain undetermined if a virtual axis is set without a servo-lock after the power is turned ON. In that case, use the present position preset to determine the origin.
- For an axis specified as a virtual axis, it is not possible to change the initial setting for encoder polarity in the mechanical specifications parameters from forward rotation for encoder increase.

1-12-1-2 Electronic Gear Function (CONNECT)

Overview

This function moves an operating axis in sync with the input axis while applying a specified gear ratio (numerator/denominator). The operation is similar to a roller connected to a gearbox.

For the input axis, a sync encoder input, MPG input, encoder feedback input (X, Y, Z, or U), virtual axis position command value (X, Y, Z, or U), or real axis position command value (X, Y, Z, or U) can be specified.

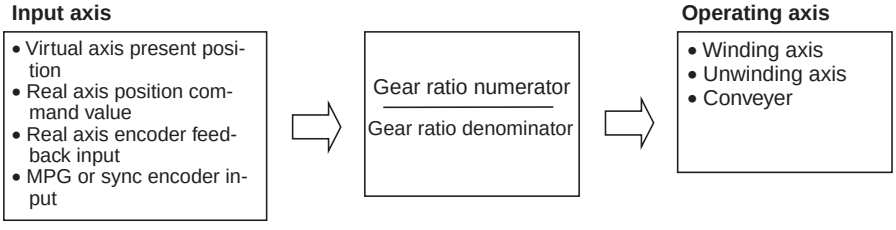

While the electronic gear function is being executed, the gear ratio can be changed in real time from the G-language program.

It is possible to integrate other axes (i.e., other than the input axis and operating axis) with the axis that is being operated by the electronic gear. This enables position compensation according to other axis positions.

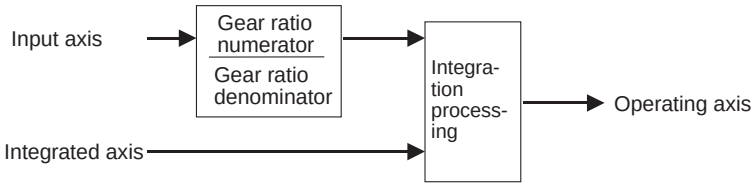

Note: The input axis, operating axis, and integrated axis must all be different axes.

Block Diagrams

Sync Encoder Input

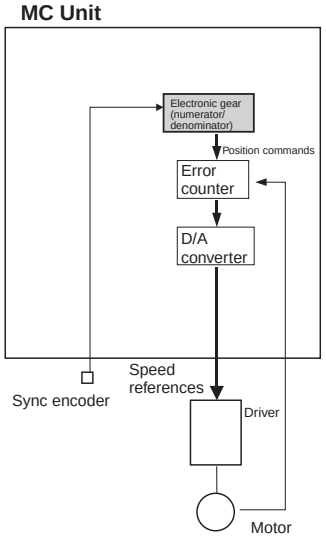

Encoder Input

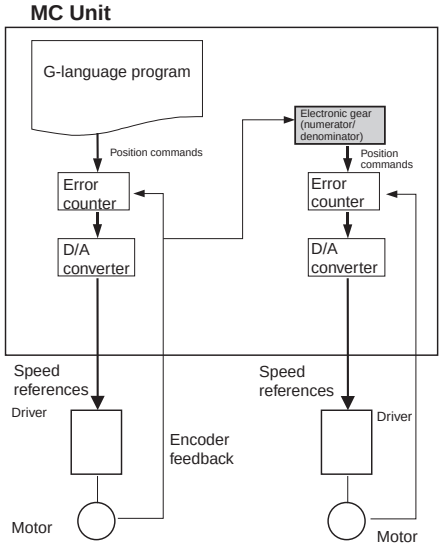

Virtual Axis Position Command Input

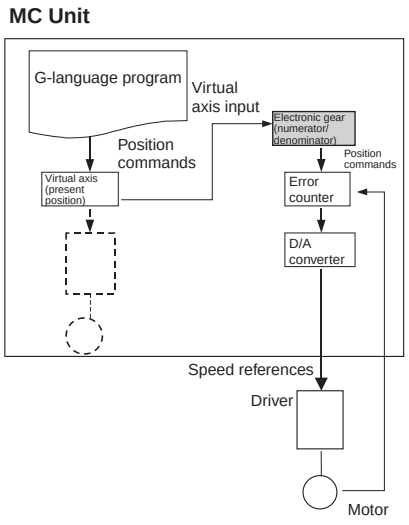

Real Axis Position Command Input

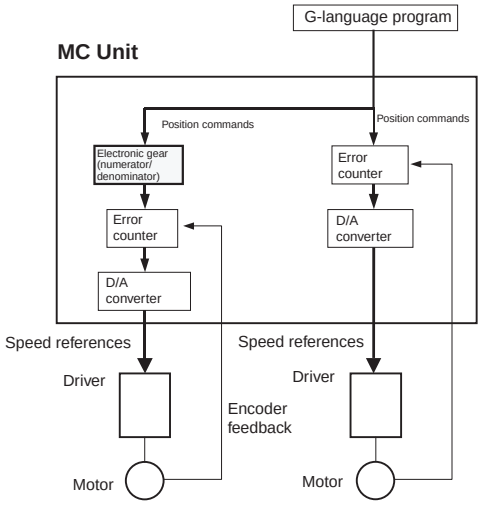

Overall Block

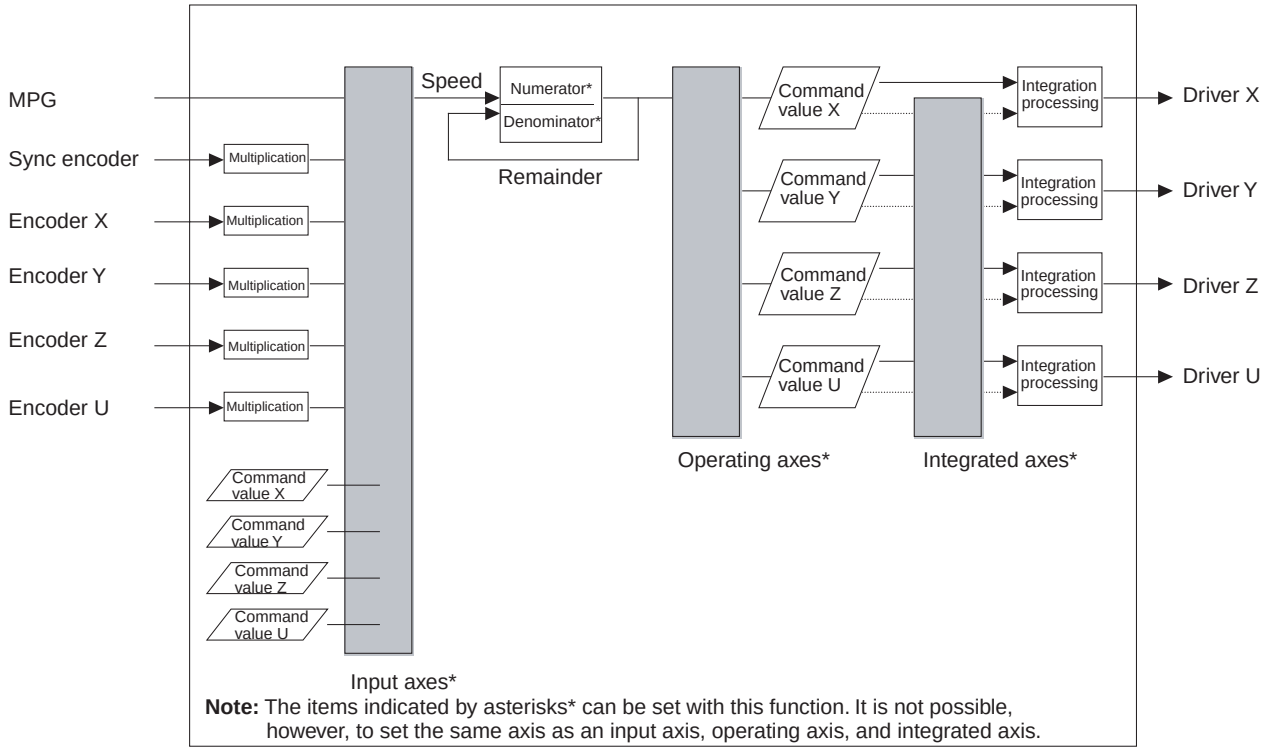

Note: The items indicated by asterisks* can be set with this function. It is not possible, however, to set the same axis as an input axis, operating axis, and integrated axis.

Settings

1) With the IOWR instruction, enable using the synchronized control functions of the customized functions, and then 2) with the G language, specify G01 for register E31 to execute.

Selecting the Customized Functions

With the IOWR instruction, turn ON customized function selection bit 04 and write the data to the MC Unit.

Programming in G Language

With G01 (LINEAR INTERPOLATION), specify register E31 and execute the operating axis (E31). Set 1 at the beginning of the operand table specified by register E31. Set the input axis, integrated axis, gear ratio numerator, and gear ratio denominator in the operand table. When the electronic gear function (CONNECT) is used with the G01 operating axis (E31), the operation can be cancelled only by executing CANCEL (electronic cam/gear cancel function).

Format

G01 <operating axis> (E31)

Note If any other operands are used, linear interpolation will be performed in the normal way for G01.

Operand

Operating axis	
Axis	**First address of operand table**
X	(E31)
Y	
Z	
U	

An error (number out of range) will occur if a number from 1996 to 1999 is specified as the first address in the operand table.

Operand Table

	Data name	Data range	Unit	Explanation
First address	Function number	1 **Note** Integers only	---	Specifies the function number. Electronic gear function: 1
+1	Input axis	1st digit 0: MPG 1: X 2: Y 3: Z 4: U 2nd digit 0: Encoder 1: Position command value **Note** Integers only	---	Specifies the input axis for the electronic gear function. Either the encoder or position command value can be specified. References the speed (p/2 ms) in each control cycle (2 ms), and is not affected by other input axis attributes (origin status, errors, etc.). With input axis backlash compensation, there is no effect if the position command value is used, but there is if an encoder is used. **Note** 1. MPG position command values cannot be set. 2. The same axis cannot be specified for both the operating axis and integrated axis. 3. An axis from a separate task can be specified.
+2	Integrated axis	0: None 1: X 2: Y 3: Z 4: U **Note** Integers only	---	Specifies the axis (position command values) for adding outputs to electronic gear function outputs. References the speed (p/2 ms) in each control cycle (2 ms), and is not affected by other integrated axis attributes (origin status, errors, backlash compensation, etc.). **Note** 1. The same axis cannot be specified for both the operating axis and input axis. 2. An axis from a separate task can be specified.
+3	Gear ratio numerator (output)	±39999999 **Note** Integers only	---	Specifies the gear ratio (numerator). If changed during operation, the results are reflected in real time.
+4	Gear ratio denominator (input)	±39999999 **Note** 1. Integers only 2. Except 0	---	Specifies the gear ratio (denominator). If changed during operation, the results are reflected in real time.

- The gear ratio numerator and denominator values in this operand table are referenced in real time while the electronic gear function is being executed. The results are thus reflected in real time when the gear ratio is changed using G63 (SUBSTITUTION).
  None of the other values are reflected in real time (i.e., they are reflected only when execution is started).
- Hold the values in this operand table according to the following timing.
  - In Stop Mode: Until electronic gear operation begins.

- In Pass Mode or In-position Check Off Mode: Until the electronic gear function advances to the next block.

- An error (number out of range) will occur if a value outside of the range shown in the above table is set or if a value that cannot be specified is set.

Note An error will occur if a non-integer is specified for integer-only data.
An MPG ratio overflow error will occur if the value goes out of range when the gear ratio is changed during axis operation using the electronic gear function.

Operation Specifications

Function

The following calculations are performed every 2 ms in the servo cycle to determine the output.

Input axis speed V: (p/2 ms) is calculated, integrated axis speed Vi (p/2 ms) is added, and the result is output to output axis Vi (p/2 ms).

Output axis Vi = (Input axis Vi x Gear ratio numerator + remainder) / Gear ratio denominator + Integrated axis

Note The division results are truncated.

Remainder = (Input axis Vi x Gear ratio numerator + remainder) – Gear ratio denominator x Output axis Vi

If the output direction is negative (i.e., if the input axis Vi x gear ratio numerator + remainder < 0), 1 is subtracted and linearity is maintained.

Output axis Vi = (Input axis Vi x Gear ratio numerator + remainder – 1) / Gear ratio denominator + integrated axis Vi

Remainder = (Input axis Vi x Gear ratio numerator + remainder – 1) – Gear ratio denominator x Output axis Vi

To change the sign of the remainder, add 1 to the output.

Changing a positive number to a negative number: Output axis Vi = Output axis Vi – 1

Changing a negative number to a positive number: Output axis Vi = Output axis Vi + 1

Example: When Gear Ratio = 1/4

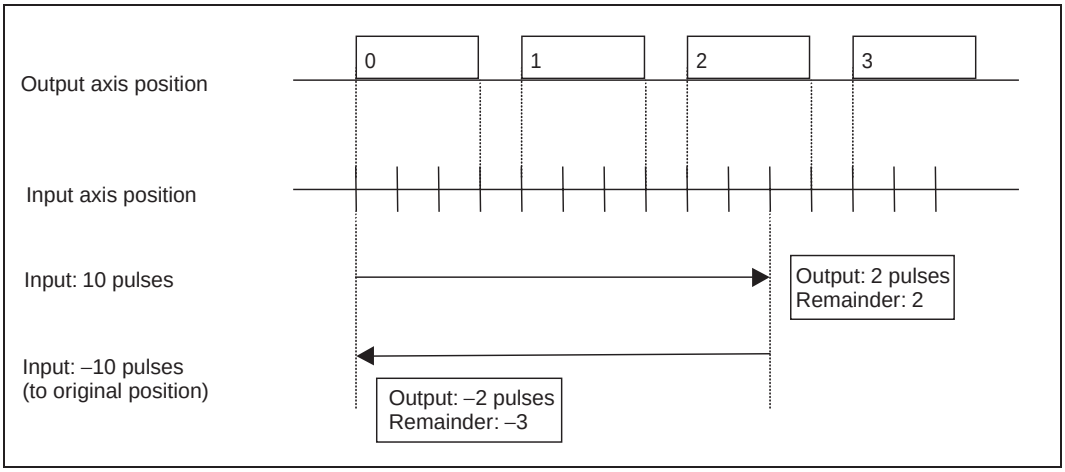

The gear ratio can be changed in real time. When the gear ratio is changed, the output waveform is smoothed by converting the remainder with the gear ratios before and after the change.

Remainder = Remainder / Gear ratio denominator before change x Gear ratio denominator after change

Relationship to Other G Codes

The relationships of the electronic gear function to other G codes are described in the following table.

For information on G codes, refer to *SECTION 7 G-language Programming*.

G codes	Relationship to electronic gear function
G00/G26/G27/G28/ G30/G31	**In Stop Mode** When the end condition is set to Repeat, the electronic gear function does not end, so these G codes cannot be executed. **In Pass Mode or In-position Check Off Mode** If any of these G codes is executed while the electronic gear function is being preread, the system waits until the electronic gear function is ended. (See note.) **Note** When the electronic gear function is executed, it is not possible to proceed to the next block as long as the electronic gear function is not ended by means of the electronic cam/gear cancel function. (The program is also not ended.)
G01/G02/G03/G32	
G04/G29/G54/G79	
Independent instructions, M000 to M999	
D000 to D255	
G10/G11/G13	The electronic gear function also operates according to the mode, but operation in Pass Mode is the same as in In-position Check Off Mode. Also, positioning completed checks are executed independently of the mode between start commands and functions other than the electronic gear function or the electronic cam function.
G17 to G22	None
G50/G51/G53	None The electronic gear function is unrelated to the coordinate system.
G60/G63	None
G69	Parameters changed by G69 are also valid for the electronic gear function. If G69 is executed while the electronic gear function is being preread in Pass Mode or In-position Check Off Mode, changes by G69 are reflected immediately.
G70/G71/G72/G73	None
G74/G75/G76	Enabled for electronic gear function. G75 is disabled, however, for continuous operation after an error occurs when an operand is specified.
G90/G91	None. The electronic gear function is unrelated to the coordinate system.

G codes	Relationship to electronic gear function
G01 (E31) (Electronic cam function)	**In Stop Mode** When the electronic gear function is executed or when "repeat" is set as the starting/ending condition for the electronic cam function, the next block is not executed. **In Pass Mode or In-position Check Off Mode** A second block can be preread and executed for the same operating axis, and operation proceeds to the next block. If a third electronic gear function or electronic cam function is executed for the same operating axis, the operation waits for the first electronic gear function or electronic cam function to be completed. **Note** If the input axis or integrated axis for the electronic gear/cam function is used as the operating axis for another electronic gear/cam function, execute the command where the axis is not the operating axis for the electronic gear/cam function first. These commands will be automatically executed in this order even if they are placed in the reverse order. Also, if the G code commands for electronic gears/cams serve as the input and output for each other and the order cannot be determined, an MPG ratio overflow error will occur.
G01 (E31) (Electronic cam/gear cancel function)	**In Stop Mode** When the end condition is set to Repeat, the electronic gear function does not end, so these G codes cannot be executed. **In Pass Mode or In-position Check Off Mode** The electronic gear function can be cancelled by this G-code command.
G01 (E31) Register function	Not related.

Relationship to Bits/Flags

The relationships of the electronic gear function to control bits and flags are described in the following table.

Bit/Flag name	Relationship to electronic gear function
Automatic/Manual Mode	If the mode is switched from automatic to manual during electronic gear function execution, the electronic gear function is paused. Operation is stopped immediately with no deceleration. Continuous execution is possible if the operating axis is not moved during the pause.
Forced Block End Bit	Enabled for the electronic gear function. Operation is stopped immediately with no deceleration. For continuous operation, the previous operations are all cleared and execution proceeds again from the present block.
Pause Bit	Enabled for the electronic gear function. Operation is stopped immediately with no deceleration. Continuous execution is possible if the operating axis is not moved during the pause.
Servo-unlock Bit	Enabled for the electronic gear function. Operation is stopped immediately with no deceleration. Continuous execution is not possible.
Axis Operating Flag	Turns ON during electronic gear execution regardless of input.
Positioning Completed Flag	Turns OFF during electronic gear execution regardless of input.
Error Counter Reset Bit	When turned ON, tasks for that axis are stopped. When turned OFF, prereading is started again.
Deceleration Stop Bit	Uses up pulses accumulated in the error counter and stops.

Relationship to External I/O

The relationships of the electronic gear function to external I/O are described in the following table.

Signal name	Relationship to electronic gear function
Limit inputs	Causes a clockwise overtravel or counterclockwise overtravel error. Operation is stopped immediately with no deceleration.
Emergency stop input	Causes an emergency stop input error. Operation is stopped immediately with no deceleration.
Driver alarm input	Causes a driver alarm input error. Operation is stopped immediately with no deceleration.
MPG input	Can be used as electronic gear function G-code command input.

Relationship to Errors

The relationships of the electronic gear function to errors are described in the following table.

Error classification	Relationship to electronic gear function
System errors	When a system error occurs, the electronic gear function is stopped for all tasks. Operation is stopped immediately with no deceleration.
Task errors	When a task error occurs, the electronic gear function is stopped for that task. Operation is stopped immediately with no deceleration.
Axis errors	When an axis error occurs, the electronic gear function is stopped in tasks performing operations for that axis. Operation is stopped immediately with no deceleration.

Relationship to Parameters

The relationships of the electronic gear function to parameters are described in the following table.

Parameter name	Relationship to electronic gear function
MPG/sync encoder	When MPG is set for electronic gear function input, operations are executed according to this setting.
Minimum unit setting	Not used for control by the electronic gear function.
Pulse rate numerator	Not used for control by the electronic gear function.
Pulse rate denominator	Not used for control by the electronic gear function.
Software limits	Detects software limit errors during operation if there are limits set for the axis and if the origin has been determined.
Maximum feed rate	An MPG ratio overflow error occurs if the command speed for the operating axis exceeds the maximum feed rate.
Backlash compensation	Backlash compensation is enabled. It is executed according to the direction of operation for the electronic gear function.
In-position	Executes positioning completion checks according to the operating mode when the electronic cam/gear function cancel and optional end commands are executed. Executes positioning completion checks for forced block end, pause, servo error, and servo-unlock operations regardless of the operating mode.

Application Example

```
N000 P000 X
N001 G54 X0 .....Presets X axis to 0.
N002 G63 E31=1000 .....Sets operand table from A1000.
N003 G63 A1000=1 .....Electronic gear function
N004 G63 A1001=0 .....Input axis = MPG
N005 G63 A1002=0 .....Integrated axis = None
N006 G63 A1003=1 .....Gear ratio numerator = 1
N007 G63 A1004=10 .....Gear ratio denominator = 10
N008 G01 X(E31).....Operating axis = X axis
N009 G63 A1010=X.....Gets present position of X axis.
```

N010 G71 N009/A1010<30 ..... Waits until present position of X axis reaches 30 or higher.

N011 G63 A1004=11 ..... Changes gear ratio denominator to 11.

Etc.

Application Precautions

Note

(1) When the electronic gear function is executed in Stop Mode, there is no operation completion, so the axis command for the next block is not executed and the program does not end.

(2) Be careful of the execution timing when using G code commands for synchronized control functions in more than one task. There is only one E register, E31, that is used in the G code commands for synchronized control functions. When specifying the first position data address, be sure that another address is not being specified in E31 in another task. Interlocking between tasks will be necessary.
Also, when in Stop Mode, operand table values indirectly referenced by register E31 for the G01 operating axis (E31) must be held until the electronic gear function begins operating. When in Pass Mode or In-position Check Off Mode, hold the values until operation moves to the next block after the electronic gear function.

- The electronic gear function and the electronic cam function cannot be simultaneously executed for the same operating axis. One of them must be ended using the electronic cam/gear cancel function (CANCEL).
- When using customized functions other than synchronized control functions (i.e., the memory link, linked traverse, or high-speed general-purpose output functions), make sure that the position data for the respective functions in the operand table do not overlap. For information on position data for customized functions, refer to *Appendix A*.
- There may be cases where operations by input axes and integrated axes do not function normally. For details, refer to *Appendix B*.
- Input axis speed (high and low) must be checked to ensure that operating axis speed does not exceed the maximum feed rate.
- When an MPG or axis feedback (encoder) is used for the input axis, input axis oscillation may affect the operating axis. If backlash compensation is set for the operating axis, oscillation will occur in the backlash compensation range. The larger the backlash, the greater the oscillation becomes.

Note It is recommended that a higher resolution encoder be used for the input axis than for the operating axis.

- The gear ratio (numerator and denominator) must be set in pulses. Even if the unit is set to millimeters, degrees, or inches in the parameters, the values must be converted to pulse units for the gear ratio numerator (output) and gear ratio denominator (input) in the electronic gear function's operand table.
- If the master axis and slave axis are switched and then the slave axis is operated by the electronic gear function with respect to the master axis encoder, the servomotor's present position will always have an error of several pulses, and the calculation of the travel distance will gradually deviate. This will require separate programming for position compensation.
- When the electronic gear function is executed, the override function for the operating axis is disabled.

1-12-1-3 Electronic Cam Function (CAMBOX)

Overview

This function moves an operating axis in sync with the specified input axis according to a cam table (i.e., a table that sets the relationship between input axis positions and the operating axis positions). The operation is similar to that of the cam mechanism of a machine.

For the input axis, a sync encoder input, MPG input, encoder feedback input (X, Y, Z, or U), virtual axis present position, or real axis position command value (X, Y, Z, or U) can be specified.

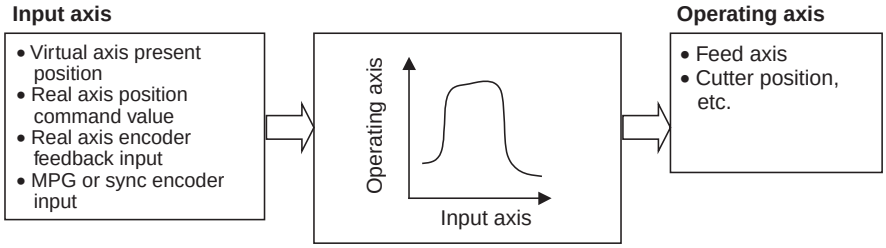

The cam table can be used for either reciprocating cam operation (with the same stroke ratio for 0° and 360°) or feed cam operation (with different stroke ratios for 0° and 360°).

It is possible to integrate other axes (i.e., other than the input axis and operating axis) to the axis that is being operated by the cam table. This enables position compensation according to other axis positions.

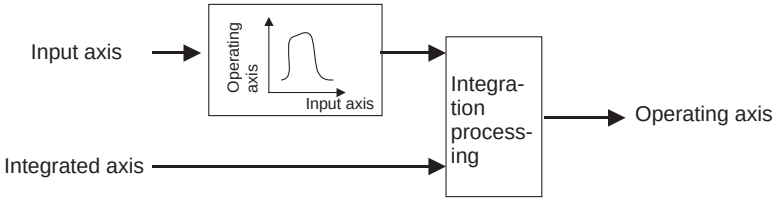

Note: The input axis, operating axis, and integrated axis must all be different axes.

Block Diagrams

Sync Encoder Input

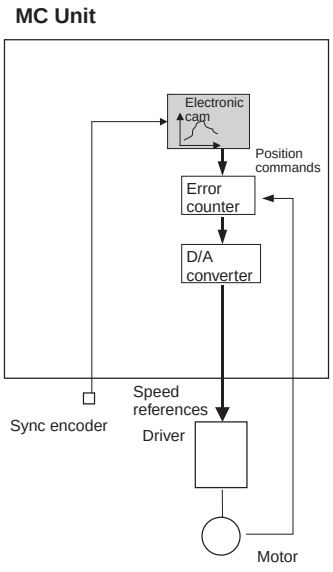

Encoder Input

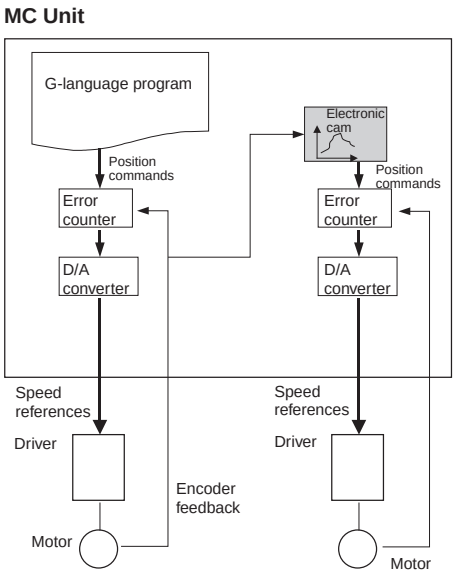

Virtual Axis Position Command Input **Real Axis Position Command Input**

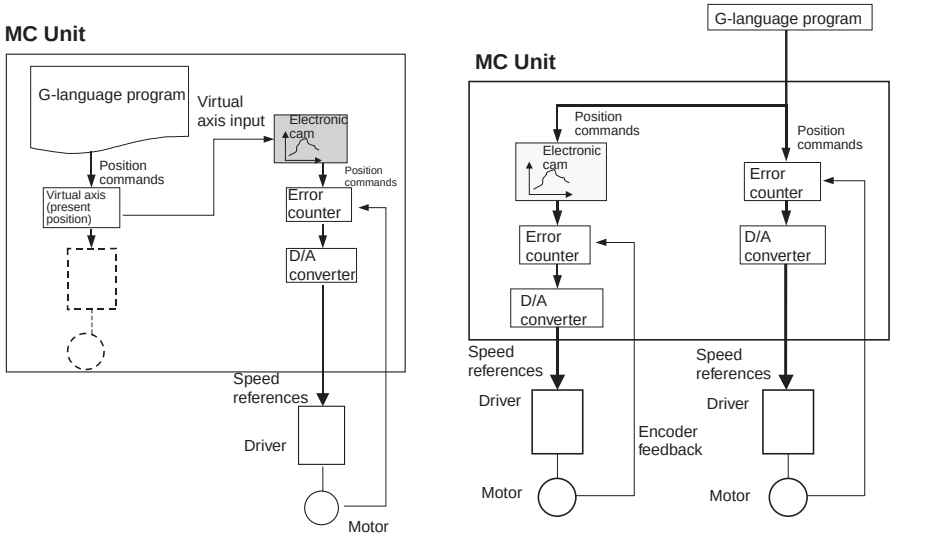

Overall Block

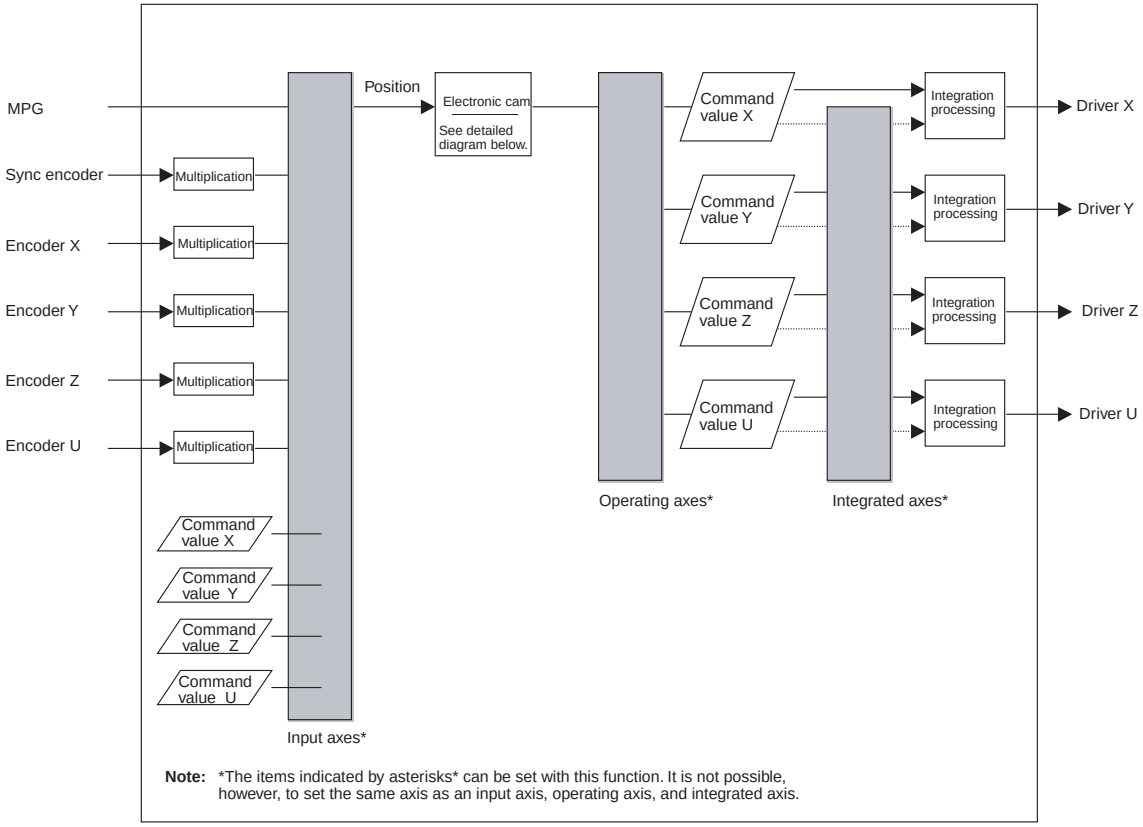

Note: *The items indicated by asterisks* can be set with this function. It is not possible, however, to set the same axis as an input axis, operating axis, and integrated axis.

Electronic Cam Diagram

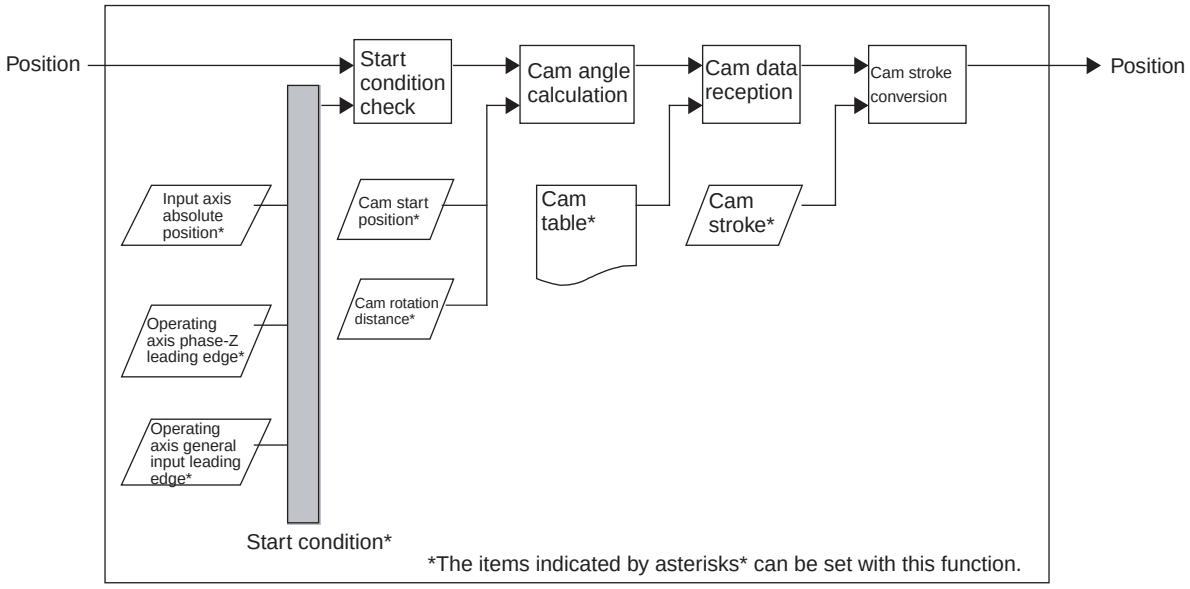

Settings

1) With the IOWR instruction, enable using the synchronized control functions of the customized functions, and then 2) with the G language, specify G01 for register E31 to execute.

1) Selecting the Customized Functions

With the IOWR instruction, turn ON customized function selection bit 04 and write the data to the MC Unit.

2) Programming in G Language

With G01 (LINEAR INTERPOLATION), specify register E31 and execute the operating axis (E31). Set 2 at the beginning of the operand table specified by register E31. In the operand table, set the distance for one rotation of the input axis (360°), the operating axis stroke width, the cam angle and stroke ratio set for the cam table (720 max.), etc.

Format

G01 <operating axis> (E31)

Note If any other operands are used, linear interpolation will be performed in the normal way for G01.

Operand

Operating axis	
Axis	**First address of operand table**
X	(E31)
Y	
Z	
U	

An error (number out of range) will occur if the sum of the first number in the operand table plus the size of the operand table exceeds 1999.

Operand Table

	Data name	Data range	Unit	Description
First address	Function number	2 **Note** Integers only	---	Specifies the function number. Electronic cam function: 2
+1	Input axis	1st digit 0: MPG 1: X 2: Y 3: Z 4: U 2nd digit 0: Encoder 1: Position command value **Note** Integers only	---	Specifies the input axis for the electronic cam function. Either the encoder or position command values can be specified. References the speed (p/2 ms) in each control cycle (2 ms) and is not affected by other input axis attributes (origin status, errors, etc.). With input axis backlash compensation, there is no effect if the position command value is used, but there is if an encoder is used. **Note** 1. MPG position command values cannot be set. 2. The same axis as the operating axis and integrated axis cannot be specified. 3. An axis from a separate task can be specified.
+2	Integrated axis	0: None 1: X 2: Y 3: Z 4: U **Note** Integers only	---	Specifies the axis (position command values) for adding outputs to electronic cam function outputs. References the speed (p/2 ms) in each control cycle (2 ms) and is not affected by other integrated axis attributes (origin status, errors, backlash compensation, etc.). **Note** 1. The same axis as the operating axis and input axis cannot be specified. 2. An axis from a separate task can be specified.
+3	Stroke width	0 to 39,999,999	Pulses mm deg inch (See note 1.)	Specifies the operating axis stroke width (i.e., the operating axis travel distance per cam rotation). This value will be the standard for the cam table data (stroke ratio).
+4	Cam rotation distance	0.0001 to 39,999,999		Specifies the distance of a single rotation (360°) of the input axis.
+5	Cam start position	0 to 39,999,999		Sets the position to which the operating axis is to move using the input axis position. This is the parameter that shifts the cam table phase. When cam operation is started, the operation begins from the angle in the cam table that corresponds to this position. **Note** A value smaller than the cam rotation distance must be set.

	Data name	Data range	Unit	Description
+6	Start/end conditions Latch Input position Repeat	1st digit: Start condition 0: None 1: Input axis position 2: General-purpose input leading edge 3: Phase-Z leading edge 2nd digit: End condition 0: 1 rotation only 1: Repeat **Note** Integers only	---	Start condition: Specifies the electronic cam operation's start condition (trigger). If MPG is used for the input axis, the input axis position cannot be specified for the start condition. If the phase Z input is specified, the input for the axis to latch will be monitored. If a general-purpose input is specified, the input for the axis number corresponding to the axis to latch (X to U correspond to 1 to 4, respectively) will be monitored. End condition: Specifies whether electronic cam operations are to end after one rotation or be repeated with no limit.
+7	Input axis position	±39,999,999	Pulses mm deg inch (See note.)	Specifies the input axis position for starting cam operation when the input axis position is the start/end condition. Electronic cam operation starts when the position set here is crossed. **Note** If 0 is set, the electronic cam function does not operate even if the input axis starts from 0. In that case, set the start/end conditions to None (0).
+8	Cam table size	2 to 720 **Note** Integers only Per axis (See note 2.)	Points	The cam table size is specified in points. A set consisting of a cam angle and stroke ratio is counted as one point.
+9	Cam table data n (cam angle)	0.0000 to 360.0000	Deg	Specifies the input axis position, in increasing order, from 0° to 360°. (Identical values are not possible.)The beginning of the table must be 0°, and the end of the table must be 360°.
+10	Cam table data n (stroke ratio)	0.0000 to ±3999.9999	Factor	Specifies the cam axis position as a percentage of the input axis position. The normal range is from 0 to ±1.
+11 +12 and higher	From here on, the descriptions are the same as for +9 and +10 according to the cam table size, alternating between cam angle and stroke ratio.			

Note (1) For version-1 MC Units, units are determined according to the parameters. MPG can be pulses only.

(2) Up to 720 points can be set per axis. Their use, however, is limited by the position data capacity.

- Values in this operand table are not reflected in real time (i.e., they are reflected only when first executed).
- Hold the values in this operand table according to the following timing.
  a. In Stop Mode: Until electronic cam operation begins. (If a start condition is set, wait for the start condition.)
  b. In Pass Mode or In-position Check Off Mode: Until the electronic cam function advances to the next block.
- An error (number out of range) will occur if a value outside of the range shown in the above table is set, or if a value that cannot be specified is set.

  Note An error will occur if a non-integer is specified for integer-only data.

- An overflow error will occur if the stroke width is not within a range of 0 to 7FFF FFFF hex after being converted to pulse units at the operating axis pulse rate.
- An overflow error will occur if the cam rotation distance is not within a range of 1 to 3FFF FFFF hex after being converted to pulse units at the input axis pulse rate.
- The settable resolution in the cam table is 1/10,000 for input axis phases. A maximum of 720 points can be set.
- An overflow error will occur if the input axis position is not within a range of C000 0001 to 3FFF FFFF hex after being converted to pulse units at the input axis pulse rate.
- An error (number out of range) will occur if a stroke width converted to pulse units and multiplied by the stroke ratio is not within a range of C000 0001 to 3FFF FFFF hex.
- A traverse continuation error will occur if a cycle start is executed after operation has been stopped by a driver alarm during electronic cam operation.

Operation Specifications

Start/End Condition

Starting and stopping the electronic cam function depends on the conditions that are set.

Start Condition

Not specified.

Electronic cam operation begins immediately after the electronic cam function is executed (or after the preceding axis operation is completed when prereading is executed).

Input Axis Position

Electronic cam operation is started when the position specified by the input axis position is crossed. The input axis setting determines whether the command position or the present position (encoder) is used. The object of comparison is only the present position or command position display, and it is unrelated to other input axis attributes (such as no origin and unlimited axes).

Latch

Electronic cam operation starts with the leading edge of the specified general-purpose input or phase-Z input. When an encoder is used for the input axis, hardware can be used to obtain an accurate starting position.

End Condition

One Rotation Only

Operation ends after one rotation (i.e., when the 0° position is reached) in either direction. The operating axis is stopped at the 0° position of the input axis and overtraveling distance will not be output.

Repeated

Operation is repeated with no limit, until an electronic cam/gear cancel, forced block end, or optional end is executed.

Starting Position for the Electronic Cam Function

The electronic cam function operates with relative movement taking the starting position as the basis. Before executing the electronic cam function, adjust the input axis and operating axis positions.

When repeating is set for the end condition, the function operates with relative movement even when the 0° position is crossed. Therefore, feed cam operation is used if the stroke ratio is different for cam angles 0° and 360°. (See the diagrams below.)

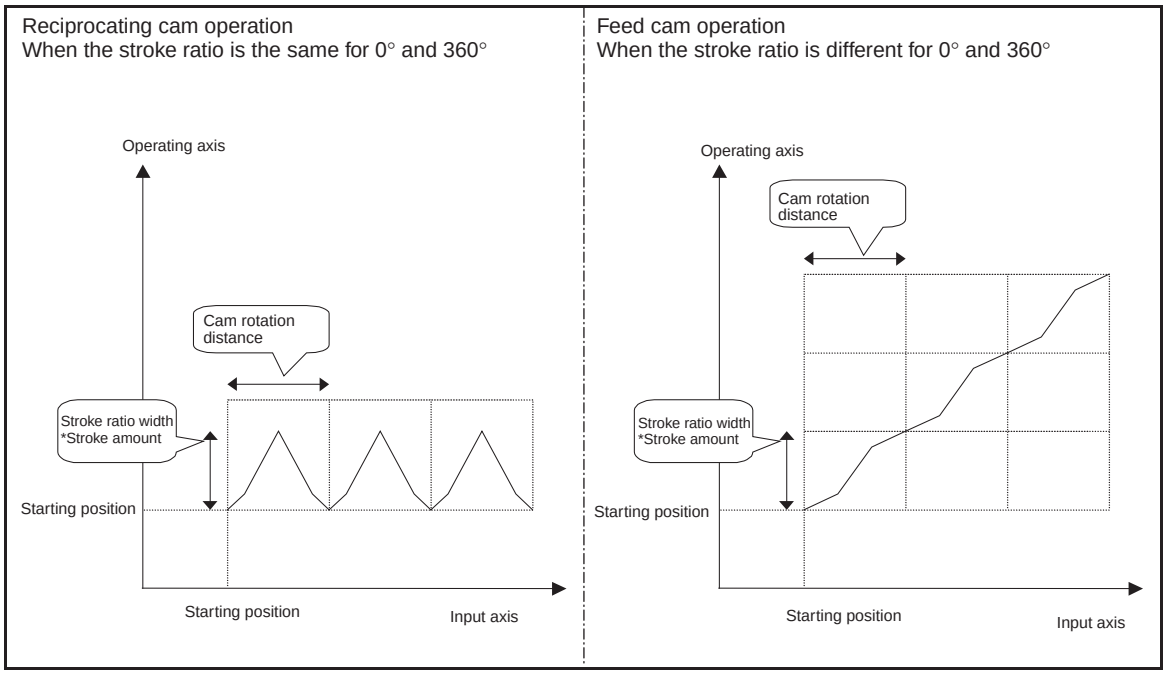

Cam Processing

The following calculations are made every 2 ms in the servo cycle to determine the output.

Unlimited Axis Processing for the Input Axis

The input axis travel distance (p/ms) is added to the cam present position. If the cam present position (p) exceeds the cam rotation distance (p), it is reduced to within the rotation distance and the number of rotations is found.

Cam Angle

The cam angle (value in degrees × 10,000) is found.

Cam angle [value in degrees × 10,000] = (Cam present position [p] × 3,600,000 / Cam rotation distance [p])

Stroke Ratio Extraction

The cam angle is taken as a search key, and a dichotomizing search is made of the cam table. If there is matching data, the stroke ratio is obtained.

If there is no matching data in the cam table, an interpolation value is found from the previous and subsequent data. The following equation is used to calculate the interpolation value.

y = (y2 − y1) × (x − x1)/(x2 − x1) + y1

Note The division results are truncated.

x is the present cam angle (value in degrees × 10,000), and y is the target stroke ratio (factor × 10,000).

x1 is the previous cam angle (value in degrees × 10,000) in the cam table.

x2 is the subsequent cam angle (value in degrees × 10,000) in the cam table.

y1 is the previous stroke ratio (factor × 10,000) in the cam table.

y2 is the subsequent stroke ratio (factor × 10,000) in the cam table.

Operating Axis Position

The relative position of the operating axis is found.

Operating axis relative position [p] = ±Stroke width [p] × Stroke ratio [Factor × 10,000] / 10,000

Operating Axis Speed

The operating axis speed is found.

Operating axis speed [p/2 ms] = Operating axis relative position [p] − Previous operating axis relative position [p]

When rotations occur with unlimited axis processing (A) for the input axis, the following is added and feed cam operation is used.

Cam angle 360° stroke ratio × stroke width [p] − Cam angle 0° stroke ratio × stroke width [p] × Rotation speed

Relationships to Other G Codes

The relationships of the electronic cam function to other G codes are described in the following table. For information on G codes, refer to the *SECTION 7 G-language Programming*.

G code	Relationship to electronic cam function
G00/G26/G27/G28/ G30/G31	**In Stop Mode** When repeat is set as the end condition, the electronic cam operation does not end, so these G codes cannot be executed. **In Pass Mode or In-position Check Off Mode** If any of these G codes is executed while electronic cam function is being preread, execution will wait until the electronic cam function is ended.
G01/G02/G03/G32	
G04/G29/G54/G79	
Independent instructions, M000 to M999	
D000 to D255	
G17/G18/G19/G20/ G21/G22	None
G50/G51/G53	Not related. The electronic cam function is unrelated to the coordinate system.
G60/G63	None
G69	Parameters changed by G69 are also valid for the electronic cam function. If G69 is executed while the electronic cam function is being preread in Pass Mode or In-position Check Off Mode, changes by G69 are reflected immediately.
G70/G71/G72/G73	None

G code	Relationship to electronic cam function
G74/G75/G76	Enabled for electronic cam function. G75 is disabled, however, for continuous operation after an error occurs when an operand is specified.
G90/G91	None. The electronic cam function is unrelated to the coordinate system.
G01 (E31) (Electronic gear or electronic cam)	**In Stop Mode** When the electronic gear function is executed or when "repeat" is set as the starting/ending condition for the electronic cam function, the next block is not executed. **In Pass Mode or In-position Check Off Mode** A second block can be preread and executed for the same operating axis, and operation proceeds to the next block. If a third electronic gear function or electronic cam function is executed for the same operating axis, the operation waits for the first electronic gear function or electronic cam function to be completed. **Note** If the input axis or integrated axis for the electronic gear/cam function is used as the operating axis for another electronic gear/cam function, execute the command where the axis is not the operating axis for the electronic gear/cam function first. These commands will be automatically executed in this order even if they are placed in the reverse order. Also, if the G code commands for electronic gears/cams serve as the input and output for each other and the order cannot be determined, an MPG ratio overflow error will occur.
G01 (E31) (Electronic cam/gear cancel)	**In Stop Mode** When repeat is set as the end condition, the electronic cam operation does not end, so these G codes cannot be executed. **In Pass Mode or In-position Check Off Mode** The electronic cam function can be cancelled by this G-code command.
G01 (E31) (Register function)	Not related.

Relationship to Bits/Flags

The relationships of the electronic cam function to control bits and flags are described in the following table.

Bit name	Relationship to electronic cam function
Automatic/Manual Mode	If the mode is switched from automatic to manual during electronic cam function execution, the electronic cam function is paused. Operation is stopped immediately, with no deceleration. Continuous execution is possible if the operating axis is not moved during the pause.
Forced Block End Bit	Enabled for the electronic cam function. Operation is stopped immediately with no deceleration. For continuous operation, the previous operations are all cleared and execution proceeds again from the present block.
Pause Bit	Enabled for the electronic cam function. Operation is stopped immediately with no deceleration. Continuous execution is possible if the operating axis is not moved during the pause.
Servo-unlock Bit	Enabled for the electronic cam function. Operation is stopped immediately with no deceleration. Continuous execution is not possible.
Axis Operating Flag	Turns ON during electronic cam execution regardless of inputs.

Bit name	Relationship to electronic cam function
Positioning Completed Flag	Turns OFF during electronic cam execution regardless of inputs.
Deceleration Stop Bit	Uses up pulses accumulated in the error counter and stops.

Relationship to External I/O

The relationships of the electronic cam function to external I/O are described in the following table.

Signal name	Relationship to electronic cam function
General-purpose inputs	Can be used as start condition.
Phase-Z input	Can be used as start condition.
Limit inputs	Causes a clockwise overtravel or counterclockwise overtravel error. Operation is stopped immediately with no deceleration.
Emergency stop input	Causes an emergency stop input error. Operation is stopped immediately with no deceleration.
Driver alarm input	Causes a driver alarm input error. Operation is stopped immediately with no deceleration.
MPG input	Can be used as electronic cam function G-code command input.
Error counter reset	When turned ON, operation is stopped for all tasks that include that axis. When turned OFF, prereading is started again.

Relationship to Errors

The relationships of the electronic cam function to errors are described in the following table.

Error classification	Relationship to electronic cam function
System errors	When a system error occurs, the electronic cam function is stopped for all tasks. Operation is stopped immediately with no deceleration.
Task errors	When a task error occurs, the electronic cam function is stopped for that task. Operation is stopped immediately with no deceleration.
Axis errors	When an axis error occurs, the electronic cam function is stopped in tasks performing operations for that axis. Operation is stopped immediately with no deceleration.

Relationship to Parameters

The relationships of the electronic cam function to parameters are described in the following table.

Parameter name	Relationship to electronic cam function
MPG/sync encoder	When MPG is set for electronic cam function inputs, operations are executed according to this setting.
Minimum unit setting	Not used for control by the electronic cam function.
Pulse rate numerator/denominator	Used when data for the input axis and the operating axis that is specified in mm units is to be converted to pulse units.
Software limits	Detects software limit errors during operation if there are limits set for the axis and if the origin has been determined.
Maximum feed rate	An MPG ratio overflow error occurs if the command speed for the operating axis exceeds the maximum feed rate.
Backlash compensation	Backlash compensation is enabled. It is executed according to the direction of operation for the electronic cam function.
In-position	Executes positioning completion checks according to the operating mode when the electronic cam/gear function cancel and optional end commands are executed. Executes positioning completion checks for forced block end, pause, servo error, and servo-unlock operations regardless of the operating mode.

Application Example

Programming Example

The following example shows the operation of sample G-language programming.

G-language Programming

N000 P000 X
N001 G63 E31=1000 .....Sets operand table from A1000.
N002 G63 A1000=2 .....Electronic cam function
N003 G63 A1001=2 .....Input axis: Y axis encoder
N004 G63 A1002=0 .....Integrated axis: None
N005 G63 A1003=100 .....Stroke width: 100 (Unit: Operating axis X unit)
N006 G63 A1004=720 .....Cam 1 rotation distance: 720 (Unit: Input axis Y unit)
N007 G63 A1005=180 .....Cam starting position: 180 (Unit: Input axis Y unit)
N008 G63 A1006=12 .....Start/end condition: 12 (Start at general-purpose input leading edge, repeat)
N009 G63 A1008=3 .....Cam table size: 3
N010 G63 A1009=0 .....Cam table data 1 (Cam angle): 0°
N011 G63 A1010=0.125 .....Cam table data 1 (Stroke ratio): 0.125
N012 G63 A1011=180 .....Cam table data 2 (Cam angle): 180°
N013 G63 A1012=0.625 .....Cam table data 2 (Stroke ratio): 0.625
N014 G63 A1013=360 .....Cam table data 3 (Cam angle): 360°
N015 G63 A1014=0.125 .....Cam table data 3 (Stroke ratio): 0.125
N016 G01 X(E31).....Operating axis: X axis

Cam Curves

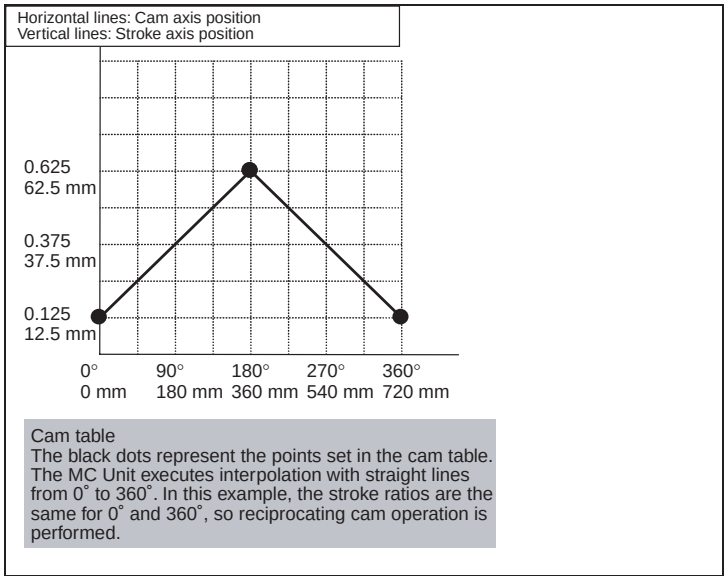

Cam table
The black dots represent the points set in the cam table. The MC Unit executes interpolation with straight lines from 0˚ to 360˚. In this example, the stroke ratios are the same for 0˚ and 360˚, so reciprocating cam operation is performed.

Output Waveforms

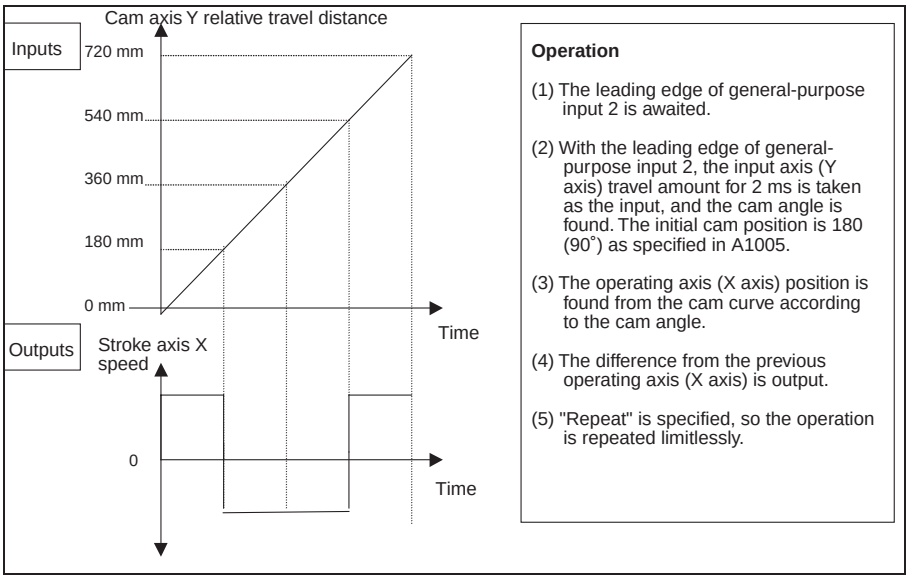

Operation

(1) The leading edge of general-purpose input 2 is awaited.

(2) With the leading edge of general-purpose input 2, the input axis (Y axis) travel amount for 2 ms is taken as the input, and the cam angle is found. The initial cam position is 180 (90°) as specified in A1005.

(3) The operating axis (X axis) position is found from the cam curve according to the cam angle.

(4) The difference from the previous operating axis (X axis) is output.

(5) "Repeat" is specified, so the operation is repeated limitlessly.

Application Precautions

Note

(1) When “repeat” is specified as the start/end condition for the electronic cam function in Stop Mode, the axis operation command for the next block is not executed and the program does not end.

(2) Be careful of the execution timing when using G code commands for synchronized control functions in more than one task. There is only one E register, E31, that is used in the G code commands for synchronized control functions. When specifying the first position data address, be sure that another address is not being specified in E31 in another task. Interlocking between tasks will be necessary.
Also, when in Stop Mode, operand table values indirectly referenced by register E31 for the G01 operating axis (E31) must be held until the electronic cam function begins operating. When in Pass Mode or In-position Check Off Mode, hold the values until the electronic cam operation starts.

- The electronic gear function and the electronic cam function cannot be simultaneously executed for the same operating axis. One of them must be ended by means of the electronic cam/gear cancel function (CANCEL).
- When using customized functions other than synchronized control functions (i.e., the memory link, linked traverse, or high-speed general-purpose output functions), make sure that the position data for the respective functions in the operand table do not overlap. For information on position data for customized functions, refer to *Appendix A*.
- Input axis speed (high and low) must be checked to ensure that operating axis speed does not exceed the maximum feed rate. If the operating axis speed exceeds the maximum feed rate, take measures such as increasing the cam angle resolution or lengthening the cam rotation distance.
- There may be cases where operations by input axes and integrated axes do not function normally. For details, refer to *Appendix B*.

- When an MPG or axis feedback (encoder) is used for the input axis, input axis oscillation may affect the operating axis. If backlash compensation is set for the operating axis, oscillation will occur in the backlash compensation range. The larger the backlash, the greater the oscillation becomes.

  Note It is recommended that a higher resolution encoder be used for the input axis than for the operating axis.
- If the electronic gear function and the electronic cam function are used one after the other, the speed must be reduced to zero between them.
- If the master axis and slave axis are switched and then the slave axis is operated by the electronic cam function with respect to the master axis encoder, the servomotor's present position will always have an error of several pulses, and the calculation of the travel distance will gradually deviate. This will require separate programming for position compensation.
- When the electronic cam function is executed, the override function for the operating axis is disabled.

Supplementary Description of Operand Table

Cam starting position = Cam starting angle ÷ 360° x Cam rotation distance

The cam starting angle is the angle for starting cam operation within the cam rotation range.

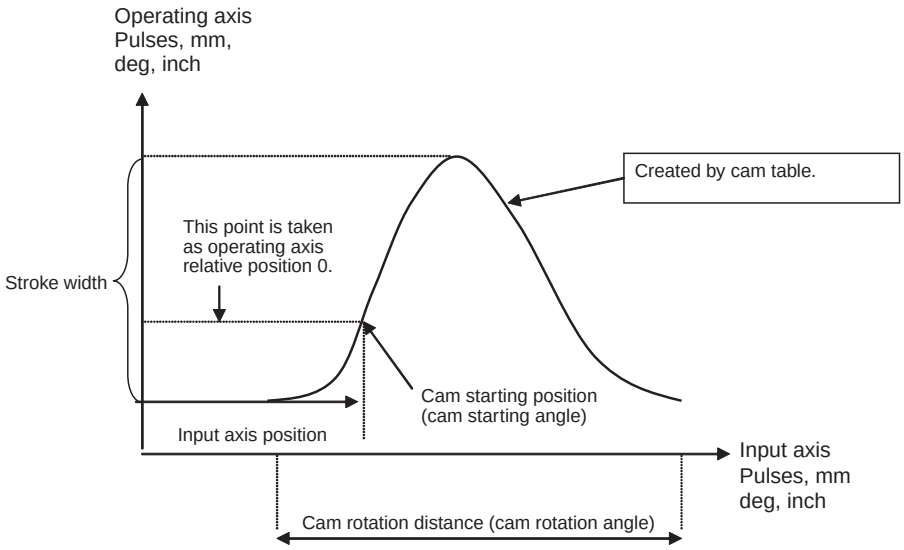

Precautions when Creating Cam Waveforms

If the operating speeds are different for the cam axis and the stroke axis, the cam table size must be increased in order to provide a smooth acceleration/deceleration curve. (Make the cam tables detailed.)

The points in the cam table are represented by the black dots in the following graph.

In the acceleration and deceleration areas (with operation at different rates of speed for the cam axis and stroke axis), make the cam table as detailed as possible. In a constant speed area (with operation at a fixed speed for the cam axis and stroke axis), one entry can be made at each end of the constant speed area.

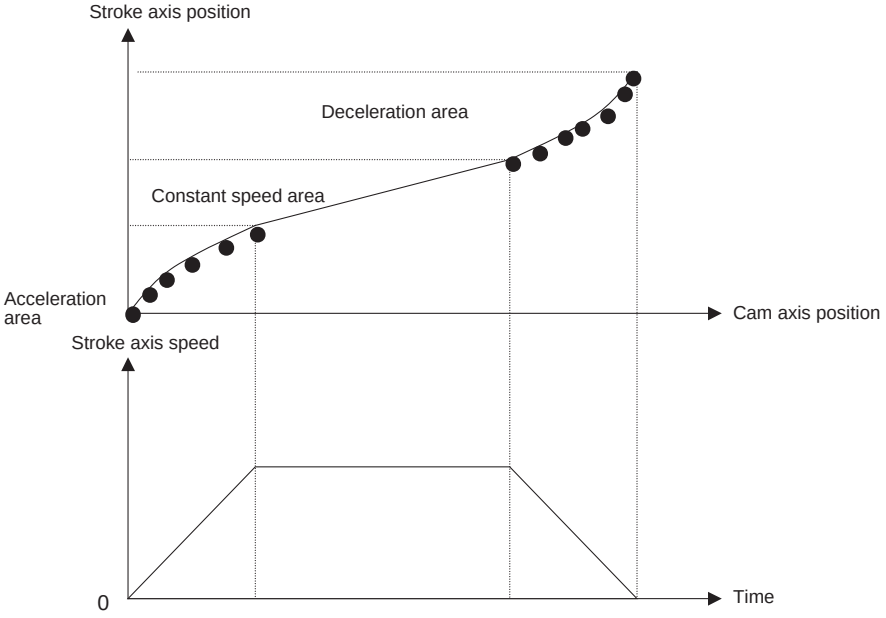

1-12-1-4 Electronic Cam/Gear Cancel Function (CANCEL)

Overview

This function is used to cancel an electronic cam or electronic gear that is either currently operating or has been preread. It is executed in the G-language program.

Settings

1) With the IOWR instruction, enable using the synchronized control functions of the customized functions, and then 2) with the G language, specify G01 for register E31 to execute.

1) Selecting the Customized Functions

With the IOWR instruction, turn ON customized function selection bit 04 and write the data to the MC Unit.

2) Programming in G Language

Format

G01 <axis to cancel>(E31)

Note If any other operands are used, linear interpolation will be performed in the normal way for G01.

Operands

Axis to cancel	
Axis	**First address of operand table**
X	(E31)
Y	
Z	
U	

An error (number out of range) will occur if 1999 is specified as the first address of the operand table.

Operand Table

	Data name	Data range	Unit	Description
First address	Function number	3 **Note** Integers only	---	Specifies the function number. Electronic cam/gear cancel function: 3
+1	Clear designation	0: Current operation 1: Preread buffer	---	The current operation is canceled if 0 is specified. The operation in the preread buffer is canceled if 1 is specified.

An error will occur (number out of range) if any value not specified above is given for the clear designation.

Application Method

Before canceling an electronic cam or gear with this function, always use G63 (SUBSTITUTION) to switch to the position data address that will be directly specified by register E31, set the beginning of the operand table to 3, specify the clear designation, and then execute G01 <axis to cancel> (E31).

Note When executing an electronic gear in Stop Mode or when the start/end condition for an electron cam is set to “repeat,” the axis operation command for the next block will not be executed and the program will not end. To execute the axis operation command in the next block, execute the electronic gear in Pass Mode or execute an electronic cam with the start/end condition set to “repeat,” and then execute the G code command to cancel the electronic cam/gear to end the electronic cam/gear function.

Operation Specifications

Function

This function ends an electronic gear or electronic cam for the specified axis and moves to the next block. Either the current operation or the one in the preread buffer can be canceled. The current operation is canceled if 0 is specified. The operation in the preread buffer is canceled if 1 is specified. If the operation to be canceled is not specified, nothing will be executed.

The accumulated pulses in the error counter for the electronic gear/cam that was canceled will be consumed and the operation will stop. If a G code command is executed to cancel an electronic cam/gear that is being executed when a G01, G02, G03, or G32 command has been preread, the electronic gear/cam will be canceled after completion of the G01, G02, G03, or G32 command.

Relationship to Other G Codes

The relationships of the electronic gear/cam cancel function to other G codes are described in the following table.

G code	Relationship to electronic gear/cam cancel function
G00/G26/G27/G28/ G30/G31	None
G01/G02/G03/G32	
G04/G29/G54/G79	
G10/G11/G13	Advances to the next block regardless of the operating mode.
G17/G18/G19/G20/ G21/G22	None
G50/G51/G53	
G60/G63	
G69	
G70/G71/G72/G73	
G74/G75/G76	Effective for the electronic gear/cam cancel function too.

G code	Relationship to electronic gear/cam cancel function
G90/G91	None
G01 (E31) (electronic gear/cam function)	Canceled by the electronic gear/cam cancel function.

Relationship to Bits/Flags

The relationships of the electronic gear/cam cancel function to control bits and flags are described in the following table.

Bit/Flag name	Relationship to electronic gear/cam cancel function
Forced Block End Bit	The blocks before and after the electronic gear/cam cancel function will be paused, but the G code command for the electronic gear/cam cancel function itself will not be ended.

Application Precautions

Be careful of the execution timing when using G code commands for synchronized control functions in more than one task. There is only one E register, E31, that is used in the G code commands for synchronized control functions. When specifying the first position data address, be sure that another address is not being specified in E31 in another task. Interlocking between tasks will be necessary.

Application Example

```
N000 P000 X
N001 G54 X0
N002 G63 E31=1000 ..... Sets operand table from A1000.
N003 G63 A1000=1 ..... Electronic gear function
N004 G63 A1001=0 ..... Input axis = MPG
N005 G63 A1002=0 ..... Integrated axis = None
N006 G63 A1003=1 ..... Gear ratio numerator = 1
N007 G63 A1004=10 ..... Gear ratio denominator = 10
N008 G01 X(E31) ..... Operating axis = X axis
N009 G63 A1010=X ..... Gets present position of X axis.
N010 G71 N009/A1010<20 ..... Waits until X axis is 20.
N011 G63 E31=1010 ..... Gets operands from A1010.
N012 G63 A1010=3 ..... Electronic gear/cam cancel operation
N013 G63 A1011=0 ..... Specifies electronic gear/cam cancel function for current operation.
N014 G01 X(E31) ..... Executes electronic gear/cam cancel function for X axis.
N015 G79
```

1-12-1-5 Register Function (REGIST) (Hardware Latch of Present Position)

Overview

This function stores the present value of an axis at a position data address in the MC Unit on the rising edge of a specified external signal (i.e., a general-purpose input or phase Z). It is executed in the G-language program.

Hardware is used to latch and record the present position to enable highly accurate compensation. This function can thus be used for accurate position compensation, e.g., using marks printed on film.

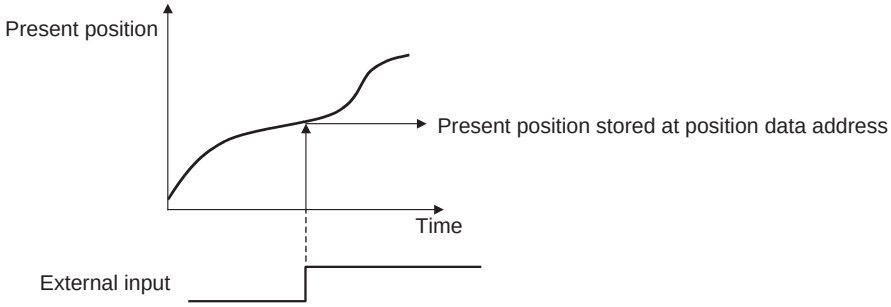

Settings

1) With the IOWR instruction, enable using the synchronized control functions of the customized functions, and then 2) with the G language, specify G01 for register E31 to execute.

1) Selecting the Customized Functions

With the IOWR instruction, turn ON customized function selection bit 04 and write the data to the MC Unit.

2) Programming in G Language

G01 <axis to latch> (E31)

Note If any other operands are used, linear interpolation will be performed in the normal way for G01.

Operands

Axis to latch	
Axis	**First address of operand table**
X	(E31)
Y	
Z	
U	

An error (number out of range) will occur if the specified first address of the operand table is greater than 1996.

Operand Table

	Data name	Data range	Unit	Description
First address	Function number	4 **Note** Integers only	---	Specifies the function number. Register function: 4
+1	Latch condition	Latch condition 1: Rising edge of general-purpose input 2: Rising edge of phase Z **Note** Integers only	---	Specifies the condition for latching. If the phase Z input is specified, the input for the axis to latch will be monitored. If a general-purpose input is specified, the input for the axis number corresponding to the axis to latch (X to U correspond to 1 to 4, respectively) will be monitored.
+2	Position data address for latched present position	0 to 1999 **Note** Integers only	---	Specifies the address of the position data where the latched present value is to be stored.
+3	Latch status	0: Waiting for latch condition to be met 1: Latch completed	---	Indicates whether the latch has been completed. The status is set in the Unit when the G code command for the register function is executed and when the latch occurs.

- An error will occur (number out of range) if any value not specified above is given for any data setting except for the latch status, which is not checked.
- An error will occur (number out of range) if the function number is greater than 4.

Operation Specifications

Function

- When the latch condition is met, the present position of the latch axis (encoder) is latched in hardware and stored in the specified position data. The latch status can be used to determine when the position has been latched. Only the latch trigger is activated, so the operation advances to the next block immediately after execution.
- Latching is possible by meeting the latch condition even if program execution is stopped. The G code command for the latch function is ended when any of the following three conditions are met.
  - The latch has been completed.
  - Execution of the G79 command has been completed.
  - Execution starts from the beginning of the program.
- If the same axis and same condition are used for two different G code commands for the register function, the G code command for the register function executed first will be overwritten by the second one and only the second one will be effective. Rising edges of inputs that occur during switching may not be detected.
- Do not used the same input as the latch condition for the register function for an electronic cam, G31, G28, or a manual origin search while the latch condition is being monitored for a G code command for the register function. The rising edge of the input will be detected for only one or the other of these functions.

Relationship to Other G Codes

The relationships of the register function to other G codes are described in the following table.

G code	Relationship to register function
G00/G26/G27/G30	None
G31	Do not use the same input as the register function. Inputs may be missed.
G28	
G01/G02/G03/G32	None
G04/G29/G54/G79	
G10/G11/G13	Execution will continue to the next block regardless of the operating mode.
G17/G18/G19/G20/ G21/G22	None
G50/G51/G53	
G60/G63	
G69	
G70/G71/G72/G73	
G74/G75/G76	Can be used for register function
G90/G91	None
G01 (E31) (electronic gear function)	

G code	Relationship to register function
G01 (E31) (electronic gear/cam cancel function)	Register function cannot be canceled.
G01 (E31) (register function)	Do not use the same input as the register function. Inputs may be missed.

Relationship to Bits/Flags

The relationships of the register function to control bits and flags are described in the following table.

Bit/Flag name	Relationship to register function
Forced Block End Bit	The blocks before and after the register function will be paused, but the G code command for the register function itself will not be ended.
Origin Search Bit	Do not use the same input as the register function. Inputs may be missed.

Relationship to External I/O

The relationships of the register function to external I/O are described in the following table.

Bit/Flag name	Relationship to register function
General-purpose input	Can be used a latch condition.
Phase Z input	Can be used a latch condition.

Application Example

```
N000 P000 X
N001 G63 E31=1000 .....Sets operand table from A1000.
N002 G63 A1000=4 .....Register operation
N003 G63 A1001=1 .....Register condition = General-purpose input
N004 G63 A1002=1005 .....Position data address for latched position
N005 G63 A1003=0 .....Latch status
N006 G01 X(E31).....Latch axis = X axis
N007 G71 N007/A1010 ! 1.....Wait until latch is completed.
  Etc.
```

Application Precautions

- Do not use the register function with circular interpolation. The servo cycle may be delayed, causing the operation time to be extended.
- Be careful of the execution timing when using G code commands for synchronized control functions in more than one task. There is only one E register, E31, that is used in the G code commands for synchronized control functions. When specifying the first position data address, be sure that another address is not being specified in E31 in another task. Interlocking between tasks will be necessary.

1-12-1-6 Linked Traverse Function

Overview

This function is used to link and execute G32 (TRAVERSE) programmed in multiple blocks.

Linking G32 (TRAVERSE) commands with different parameters, such as pitch (number of winds) and winding width, enables complex winding control operations, such as changing the pitch for a single workpiece.

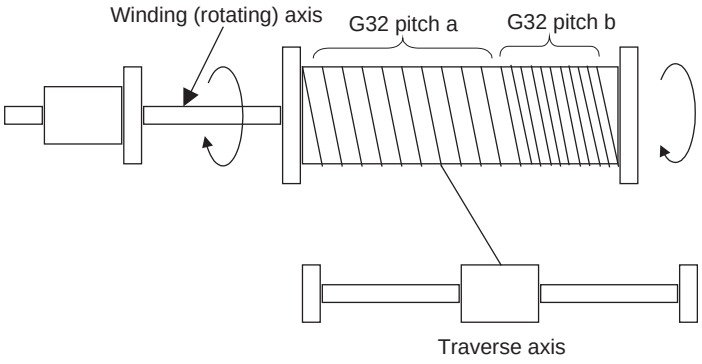

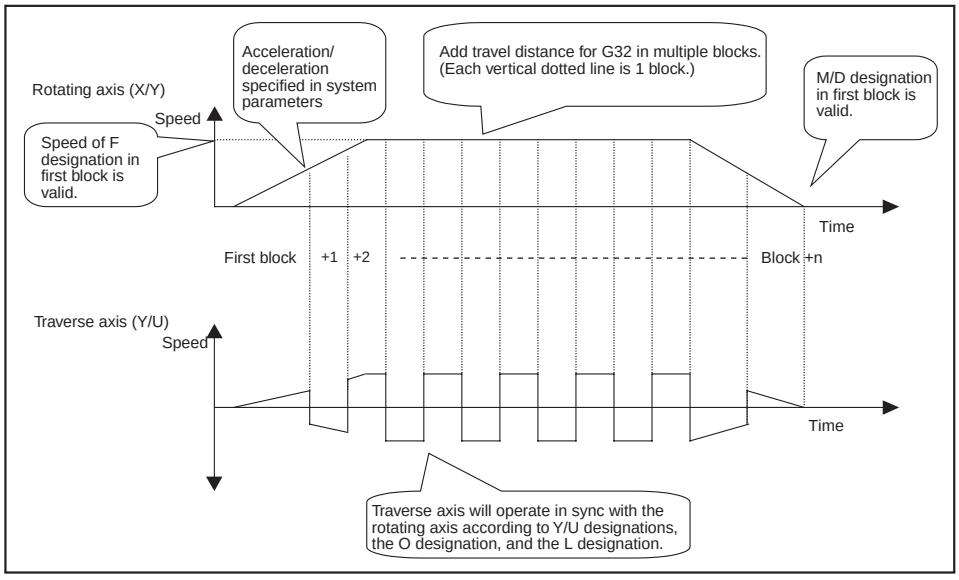

Linked G32 commands are executed in Stop Mode using the speed designation in the first block with G32. For the rotating axis (X/Y) designations, the number of windings (rotations) per layer or the pitch can be specified.

Application Example

X axis, Unit: degree; Y axis, Unit: mm

N001 G63 A1990=111	Function enabled with pitch specification and start specification
N002 G63 A1991=540	Start specification = 540 degrees (1.5 rotations)
N003 G32 X–0.1234 Y1.234 F360 O180 L1	Direction of rotation = Negative, Direction of traverse axis = Positive Pitch = 0.1234 Winding width = 1.234 mm Speed = 360 degrees/s (1 rotation/s) End specification = 180 degrees

(0.5 rotation)
Layers = 1
Number of windings per layer = 1.234/0.1234×360 = 3600 degrees (10 rotations)

N004 G32 X–0.2468 Y–2.468 O540 L2 .....Direction of rotation = Negative, Direction of traverse axis = Negative
Pitch = 0.2468
Winding width = 2.468 mm
End specification = 540 degrees (1.5 rotations)
Layers = 2
Number of windings per layer = 2.468/0.2468×360 = 3600 degrees (10 rotations)

N005 G63 A1990=0 .....Function disabled (From here, G32 will have normal function.)

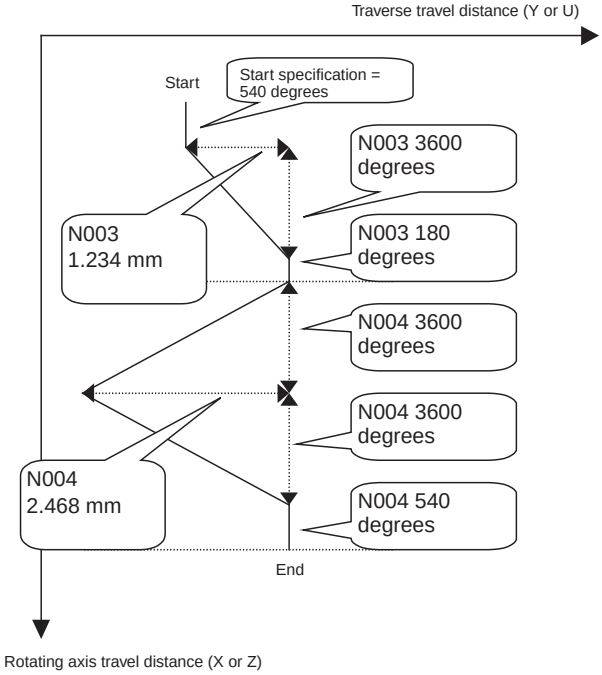

Settings

1) With the IOWR instruction, enable using the synchronized control functions of the customized functions, and then 2) program G32 (TRAVERSE) in the G-language program in multiple blocks and execute them.

1) Selecting the Customized Functions

With the IOWR instruction, turn ON customized function selection bit 00 and write the data to the MC Unit.

2) Programming in G Language

Format

The format is as follows:

Overall format

N001 G32 ・・・
N002 G32 ・・・
N003 G32 ・・・
to
N010 G32 ・・・
N011 G??

If the linked transverse function is enabled and the same axis and same direction of rotation are specified for G32 commands in consecutive blocks, up to 100 blocks can be linked for execution (excluding comment blocks). All linked blocks are treated as one block. The F designation and M/D designation in the first block are the only ones that are valid. The designations in the other blocks are invalid.

Note Block numbers are arbitrary. Operands have been omitted.

Internal Instruction Format

G32_X or Z<windings (rotations) per layer/pitch> (See note 1.)
_Y or U<winding width>
_F<rotational speed> (See note 2.)
[_M<M code>][/stopover] (See note 2.)
[_D<D code>][/stopover] (See note 2.)
[_O<end specification>]
_L<layers>

Note

(1) When the pitch (i.e., the travel distance of the traverse axis for a 360-degree turn of the rotating axis) can be specified for the X or Z axis, 0 cannot be specified and the upper limit of the winding width is 745654.

(2) F, M, and D are valid only in the first block.

Parameters for Traverse Operation

When the linked traverse function is enabled, position data A1990 to A1993 are used as parameters for the traverse operation. These parameters are read for the first block with a linked G32 command.

A1990	Traverse operating mode	For X or Y axis
A1991	Start specification	
A1992	Traverse operating mode	For Z or U axis
A1993	Start specification	

Traverse Operating Mode Specification (A1990/A1992) Details

Different aspects of the operating mode are specified with the value of each digit. The decimal place is ignored. An error will occur (number out of range) if a value that cannot be specified is set.

	8	7	6	5	4	3	2	First digit
A1990/A1992	(8)	(7)	(6)	(5)	(4)	(3)	(2)	(1)

Setting name	Set values
(1) Customized function enable	0: Disabled (The normal function is performed.) 1: Enabled
(2) X/Y specification method	0: Specify the number of windings (rotations) of the rotating axis per layer (normal setting). 1: Specify the pitch.
(3) With/without start specification	0: No start specification 1: Start specification
(4) to (8)	Not used.

Note Pitch Specifications

The pitch is the travel distance of the traverse axis per 360-degree rotation of the rotating axis. The travel distance of the rotating axis per layer can be calculated from the winding width and pitch. The unit for the pitch is the same as that for the traverse axis (Y or U) and it is valid to four decimal places.

Travel distance of rotating axis per layer = |Winding width| ÷ pitch × 360

An error (overflow error) will occur if the pitch is set to 0. The upper limit of the winding width is 745654.

Example:
Assume there are 100 rotations per layer and a winding width 40 mm.

Note X axis unit: degrees, Y axis unit: mm

- Specifying the Windings of the Rotating Axis per Layer
  G32 X36000 Y40
  ↑
  360 degrees times 100 rotations
- Specifying the Pitch
  G32 X0.4 Y40
  ↑
  If the pitch is 0.4, then, |40| ÷ 0.4 × 360 = 36000

Start Specification (A1991/A1993)

A start specification can be made. An error will occur (number out of range) if a non-specified value is set.

A1991/A1993	0 to 3999 9999 Decimal can be placed anywhere as long as there are no more than 4 decimal places.

Note Start Specification
If a start specification is made, the traverse axis will stop at the start of linked G32 operation and the rotating axis will turn for the amount set for the start specification before starting the traverse axis. (This occurs only before the first linked block, not before all linked blocks.) The unit for the start specification is the same as that for the rotating axis (X/Z). If a negative travel distance is specified, an error will occur (negative rotation specification error) and if 0 travel is specified, operation will be the same as if the start specification had not been made.
The travel distance for the start specification must be included in the number of X-axis or Z-axis rotations explained in *Restrictions* under *7-3-15 G32: TRAVERSE*.

Application Method

Operation is performed according to the settings. A comparison of operation to the normal traverse operation in Pass Mode is given in the following table.

Classification	Functionality	Normal traverse operation in Pass Mode (for reference)	Linked traverse (customized function)
Operands	F designation	Can be changed for each block. Overrides are valid.	Operates according to the first linked block with G32. Overrides are valid.
	M/D designations	Can be output from each block.	Operates according to the first linked block with G32
	X/Z specifications	Specified as windings (rotations) per layer.	Can be specified as windings (rotations) per layer or as the pitch.
	Y/U specifications	Can be changed for each block.	Same.

Classification	Functionality	Normal traverse operation in Pass Mode (for reference)	Linked traverse (customized function)
G execution control	Reading timing of indirectly specified data	Read when prereading.	Read for all linked G32 commands when the first G32 command is executed.
	Single block operation	Blocks executed one at a time.	All blocks with linked G32 commands executed together.
	Forced Block End Bit	Only block currently being executed is ended. **Note** Ending is placed on hold for integrated sections.	All blocks with linked G32 commands ended.
	G74	Only block currently being executed is ended. **Note** Ending is placed on hold for integrated sections.	All blocks with linked G32 commands ended.
	G75	Only the next block is skipped.	All blocks with linked G32 commands skipped.
	Link (pass) condition	Executing the next G32 for the same axis and rotating direction within the minimum pass time.	Programming a G32 command for the same axis and rotating direction in the next block. **Note** Comments can be entered.
	Maximum number of links (passes)	No limit.	100 blocks max. (not including comment blocks)
	Operating mode	All settings are valid. Pass operation is possible for linear interpolation or traverse operations for the same axis and rotating direction.	Operation is performed in Stop Mode regardless of the operating mode (like G00).
	Execution block number (status)	The preread block number is given.	The number of the block currently being executed is given. **Note** If any errors are detected before the start of operation, the number of the block with the error is given.
	Pause/continue operation	Continuous execution is possible, but if the axis is moved while operation is stopped, continuous operation cannot be continued. **Note** The request is placed on hold for integrated sections.	Continuous execution is possible, but if the axis is moved while operation is stopped, continuous operation cannot be continued.
	Software limit checks (traverse axis)	Check when prereading is performed.	All blocks checked at beginning of linked G32 commands.
	Overrides	Read when prereading and cannot be changed during operation.	Can be changed in real time except when decelerating to target position.

Classification	Functionality	Normal traverse operation in Pass Mode (for reference)	Linked traverse (customized function)
Waveform	Triangular control	The acceleration/deceleration time is maintained for each block and the speed is decreased.	Triangular control is performed for the linked G32 commands.
Performance	Minimum operating time per block	None **Note** Passing, however, will not be performed if the time is the same or below the minimum pass time.	2 ms **Note** If the time is less than 2 m, an error will occur (added axis speed exceeded) and the rotating axis will decelerate to a stop. The traverse axis will stop after the accumulated pulses have been consumed. When this error occurs, continuous operation cannot be continued (a traverse continuation error will occur).

Application Precautions

- The linked traverse function is enabled from when the program is executed from the start after the customized functions have been enabled.
- When the rotational speed [p/s] is lower than the traverse axis speed [p/s]), unevenness can occur in the speed of the traverse axis. Adjust the pulse rate if unevenness occurs.

1-12-1-7 Memory Link Function

Overview

Position data addresses A1970 to A1985 can be allocated to user-specified addresses in I/O memory in the CIO, DM, or EM Areas. This reduces the work required to write ladder programs because this position data is automatically transferred between the CPU Unit and MC Unit without any special programming.

The data is exchanged at the same time as the CIO Area words allocated to the MC Unit. Data can also be changed (from MC Unit position data to CPU Unit only) when positioning with travel distances set with the stopover function.

Settings

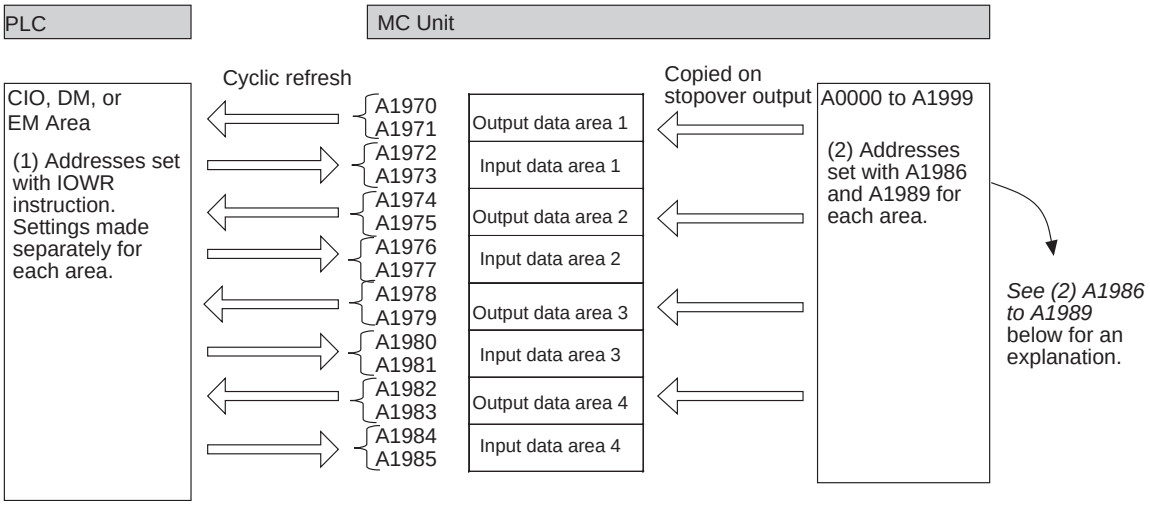

Setting Addresses To Be Refreshed

The IOWR instruction is used to set the addresses of the words in the CPU Unit with which to exchange position data. If the operation is completed normally, the Equals Flag (one of the Conditions Flags) will turn ON and the settings will be enabled. Under the following conditions the operation will not be completed normally.

- If an intelligent transfer requested immediately before has not been completed.
- If the Teaching Box is in Enabled Mode or Occupy Mode.
- If a number other than 2 is specified as the number of words to be transferred.
- If the data is out of range.

The other Condition Flags operate the same as for other addresses used for IORD/IOWR in the MC Unit. (Refer to the *Flags on page 210*.)

Control data for IOWR				R/W	Name	Structure and description
Area 1	Area 2	Area 3	Area 4			
1838 (6200)	183A (6202)	183C (6204)	183E (6206)	W	Output Setting Areas 1 to 4 (Position data → CPU Unit)	Set whether to enable output (MC Unit → CPU Unit) and the addresses to which to output. 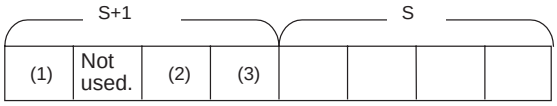 S: Write destination word address (0000 to FFFF) S+1: Specifications (1) Bit 15: I/O Enable Bit 0: Disable I/O 1: Enable I/O (2) Bits 4 to 7: Area 0: CIO, 1: DM, 2: EM (3) Bits 0 to 3: EM bank number (valid only when EM Area is specified) 0 to C: Bank number
1839 (6201)	183B (6203)	183D (6205)	183F (6207)	W	Input Destination Setting Areas 1 to 4 (CPU Unit → Position data)	Set whether to enable input (CPU Unit→ MC Unit) and the addresses from which to input. Settings are the same as for output.

A1986 to A1989

When the travel distance specified with the stopover function (M code) has been reached, the position data address and function enable/disable setting copied into the output data area are set. This function operates only for the stopover M code. If a normal M code or a stopover with a D code is specified, the operation is performed with the normal specifications.

Position data address				Name	Structure and description
Task 1	Task 2	Task 3	Task 4		
A1986	A1987	A1988	A1989	M code output setting	When the M code is output with the stopover function, the position data address and function enable/disable setting copied into the output data area are set. Tasks 1 to 4 correspond to output data areas 1 to 4. 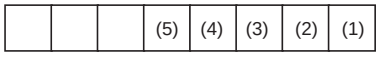 (5) Enable/Disable Bit 0: Disabled (normal operation) 1: Enabled (When the M code is output with the stopover function, two words of data from the position specified with (1) to (4) are set in the corresponding output destination position data. The M code is not output.) (1) to (4) Output destination position data address 0000 to 1998

Application Method

Use the following procedure.

1,2,3...

1. Use the IOWR instruction to select the customized functions.
2. Use the IOWR instruction to set the first word for each I/O area and enable the memory links. All areas are disabled in the default settings.

3. Refreshing data is started from the words set in step 2. The data in the MC Unit will be refreshed at the same time as the other words allocated to the MC Unit. The data format is given in the following table.

Position data address				Name	Structure and description
Area 1	Area 2	Area 3	Area 4		
1970 1971	1974 1975	1978 1979	1982 1983	Output Data Area (Position data → CPU Unit)	This data is output from the MC Unit (position data) to the CPU Unit (word data). Each digit in the position data corresponds to one bit in the word data. If a digit in the position data is 0, the bit in the word data will be 0. If the digit is 1 to 9, the bit will be 1. Decimal points are ignored. 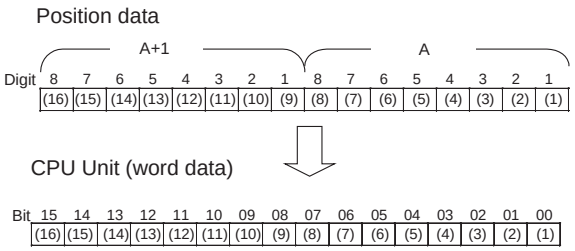
1972 1973	1976 1977	1980 1981	1984 1985	Input Area (CPU Unit→Position data)	This data is input from the CPU Unit (word data) to the MC Unit (position data). Each bit in the word data corresponds to one digit in the position data. If a bit in the word data is 0, the digit in the position data will be 0. If a bit in the word data is 1, the digit in the position data will be 1. 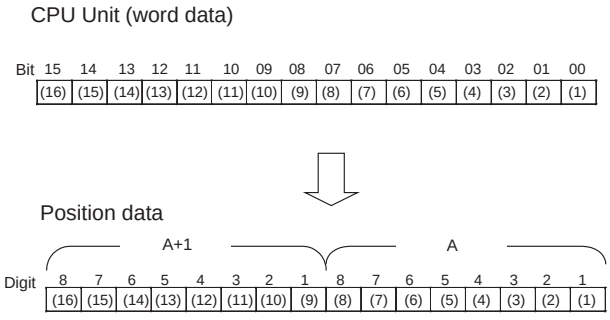

4. To overwrite the value in the output data area when the travel distance set with the stopover function has been reached, set data in A1986 to A1989 (by task) and add the stopover M code to the G code. Any value can be used for the M code.

Application Example

Ladder Program

1,2,3... 1. Select the customized functions.

2. Enable the words for the links.

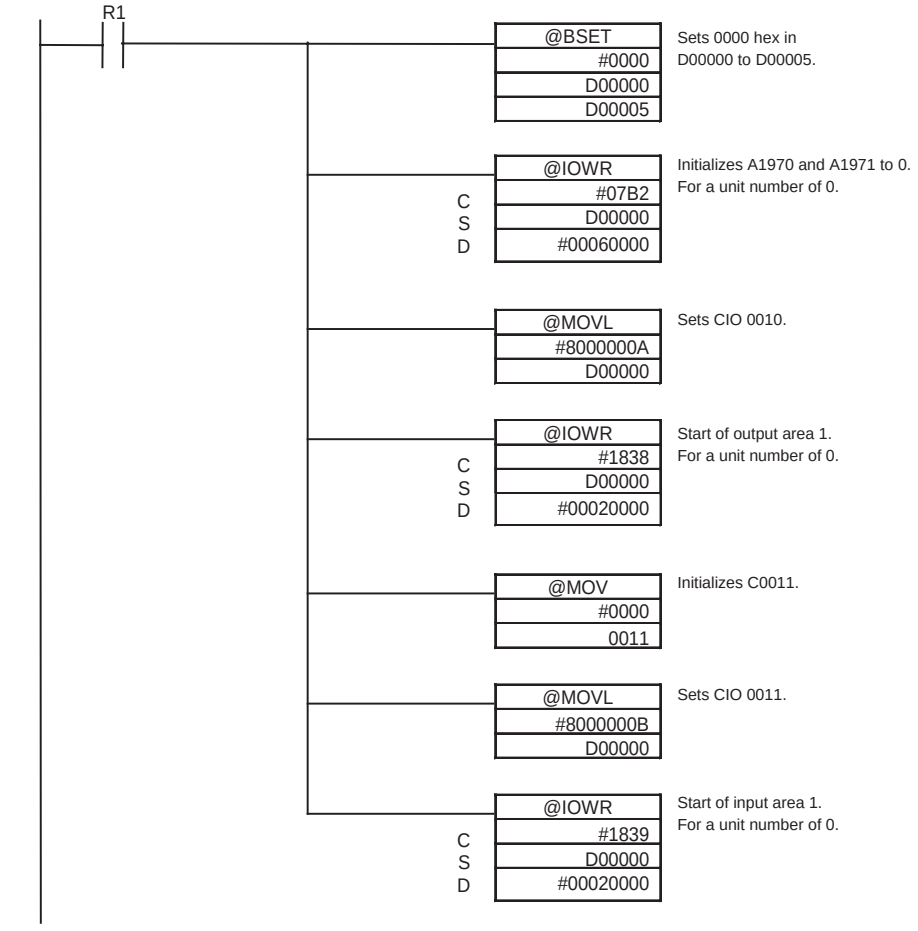

(Repeated in the same way for the other areas.)

3. Wait for refreshing. (Wait until the I/O refresh has been performed twice after 10 ms has passed from execution of IOWR.)

4. Start operation with the G-language program.

G-language Programming

For Task 1, Output Area 1, Input Area 1

```
N005 G63 A1970=01010101 ..... Output to Output Area 1 (lower 8 bits).
N006 G63 A1971=10101010 ..... Output to Output Area 1 (upper 8 bits).
  :
N012 G63 A1986=11234 ..... Set to copy A1234 when stopover
                           M code is output.
N013 G63 A1234=10101010    Set data to be copied.
N014 G63 A1235=01010101    Set data to be copied.
N015 G00 X10000 M000/X1000 ..... When X has moved 1000 units, A1970
                                 = A1234 and A1971 = A1235.
N016 G63 A1986=0 ..... Restores the setting
N017 G71 N017/A1972=11110000... Branches according to value of Input
                                Area 1 (lower 8 bits).
```

Application Precautions

- After areas have been enabled using the IOWR instruction (control data = 1838, 183A, 183C, 183E), 0 will be output for the next I/O refresh and the position data will be output from the following I/O refresh. If the time from executing IOWR to the first I/O refresh is less than 10 ms, one more cycle time may be required.
- After words have been enabled using the IOWR instruction (control data = 1838 to 183F) or after changing the word allocations when other words were previously enabled, the present values will remain in the words that were previously refreshed.
- When enabled output data areas (A1970 to A1971, A1974 to A1975, A1978 to A1979, A1982 to A1983) and word data being refreshed in the CPU Unit are overwritten, the data will be refreshed during the next I/O refresh period.
- When enabled input data areas (A1972 to A1973, A1976 to A1977, A1980 to A1981, A1984 to A1985) are overwritten, the contents of the CPU Unit data words will remain unchanged until the next I/O refresh period.
- Refreshing will continue even when loads (outputs) are turned OFF by the CPU Unit.
- Complete setting A1986 to A1989 at least 10 ms before the output for the stopover function. If the output occurs in less than 10 ms, operation will be performed with the previous values of A1986 to A1989.

1-12-1-8 Resetting M Codes with Program Execution Stopped

Overview

If this function is enabled, the M Code Reset Bit allocated in the CPU Unit can be used to reset the M code from the CPU Unit even when program execution is stopped.

Specifications

Settings

There are no settings required for this function. This function is enabled as soon as the IOWR instruction is executed to select the customized function.

The following tables show when the M Code Reset Bit is valid.

Function Enabled

	During program execution (Except during decelerations for pausing operation)	All other times
When outputting M000 to M499	Valid	Valid (Except during decelerations for pausing operation) **Note** M code reset standby status will not be entered when program execution is restarted.
When outputting M500 to M999	Valid	Valid

Function Not Enabled

	During program execution (Except during decelerations for pausing operation)	All other times
When outputting M000 to M499	Valid	Not valid
When outputting M500 to M999	Valid	Valid

Application Precautions

The M Code Reset Bit cannot be used during deceleration for pauses after outputting M0000 to M499 with the stopover function. Turn ON the M Code Reset Bit after the Program Execution Flag turns OFF.

1-12-1-9 High-speed General-purpose Output Function

Overview

With this function, a general-purpose output (general-purpose outputs 1 to 4) allocated to a zone (zones 1 to 8) is turned ON when the present position is within the zone.

The response time for this function is faster than that for Zone Bits 1 to 8 (response time: 2.1 to 4.1 ms).

This function is effective for controlling high-speed outputs during servo operation. It can be used when a high-speed output is required when the servo reaches a specific position, e.g., to drop a workpiece at a specific position. This function can help increase processing accuracy and flexibility.

Settings

1) With the IOWR instruction, enable using the high-speed general-purpose output function of the customized functions, and then 2) use A1999 to allocate zones 1 to 8 to general-purpose outputs 1 to 4.

1) Selecting the Customized Functions

With the IOWR instruction, turn ON customized function selection bit 03 and write the data to the MC Unit.

2) Allocations with A1999

The numbers of the zone and axis to which general-purpose outputs 1 to 4 are to be synchronized must be specified. This is achieved using position data A1999. This setting is read when the IOWR instruction is used to select the customized functions.

Zone settings in the zone parameters are not used for this function.

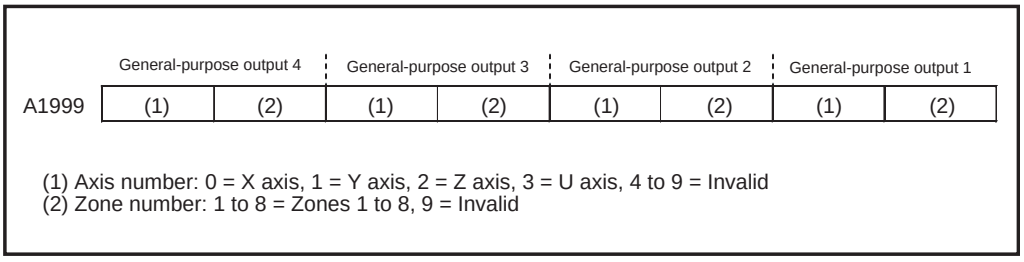

(1) Axis number: 0 = X axis, 1 = Y axis, 2 = Z axis, 3 = U axis, 4 to 9 = Invalid
(2) Zone number: 1 to 8 = Zones 1 to 8, 9 = Invalid

Application Method/Execution Results

Application Method

Use the following procedure.

1,2,3...

1. Set the axis and zone numbers to synchronize with the general-purpose outputs in A1999.
2. Use the IOWR instruction to select the customized functions.
3. Turn ON the general-purpose output bit (allocated word n, bits 0 to 3).

If the function is enabled, the general-purpose output bit (allocated word n, bits 0 to 3) will function as the general-purpose output enable bit. This function produces an output only when the General-purpose Output Bit is turned ON.

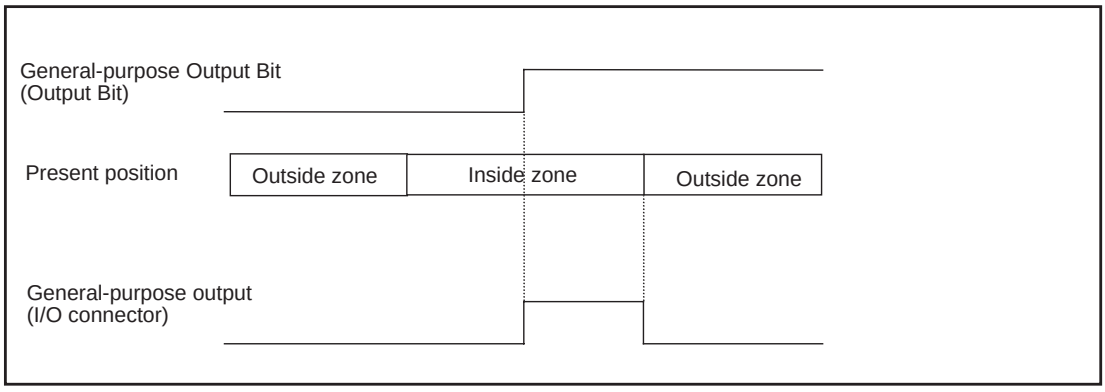

Execution Results

The general-purpose output will turn ON and OFF according to the present position. The response time is 2.1 to 4.1 ms.

Note The response time is the time from when the encoder reaches the edge of the zone until the general-purpose output is turned ON or OFF on the MC Unit.

Application Example

Set the axis and zone for general-purpose output as shown in the following table.

General-purpose output 4		General-purpose output 3		General-purpose output 2		General-purpose output 1	
U axis	Zone 4	Z axis	Zone 3	Y axis	Zone 2	X axis	Zone 1

1,2,3... 1. Set in A1999. (Use CX-Motion to set 34231201 directly or set it with the following ladder program.)

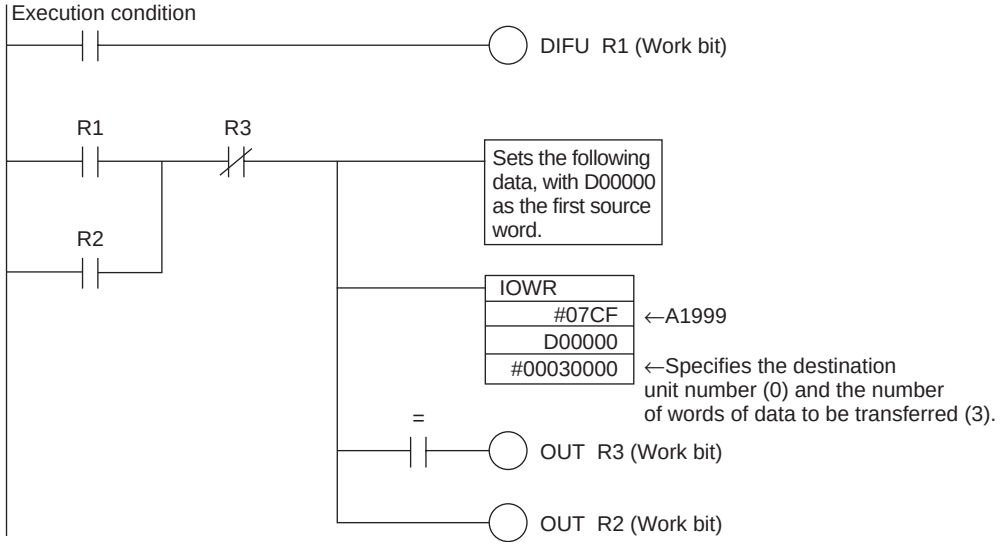

Transfer Data (DM)

D00000	0000
D00001	1201
D00002	3423

2. Select the customized functions. See “Customized Functions” on page 45.
3. Enable output.

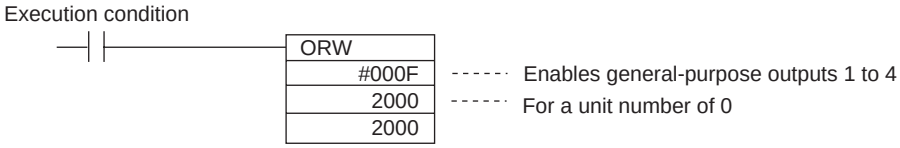

Application Precautions

- The settings in A1999 are read when the IOWR instruction is used to select the customized functions. Once set, the settings cannot be changed.
- Changes to the zone parameters are read in real time. The settings in the negative and positive directions cannot be changed at the same time. If there is a possibility that unexpected outputs will be produced when a zone is being changed, turn OFF the General-purpose Output Bits (allocated word n, bits 0 to 3) before changing the zone.

Note With the CX-Motion, both the positive and negative settings can be downloaded at the same time. There are, however, subtle differences in the timing for reading these at the MC Unit, so the above precaution applies even when downloading zone settings from the CX-Motion.

- The response time for changing zone parameters and General-purpose Output Bits (allocated word n, bits 0 to 3) depends on Unit status. Approximately 10 ms is required.

1-12-2 Easy Backup Function

This section describes the use of the easy backup function.

Overview

When the CS1W-MC221-V1 or CS1W-MC421-V1 MC Unit is mounted under a CS1-H CPU Unit, the CPU Unit's easy backup operation automatically backs up not only all the data in the CPU Unit, but also the following data in the MC Unit's flash memory. The data is automatically backed up, restored, and verified using a Memory Card inserted in the CPU Unit

- Position data
- System parameters
- G-language programs

When the above data is written to the Memory Card by the easy backup operation, it is backed up as a Unit/Board backup file with a filename of BACKUP□□.PRM.

Note The squares (□□) represent the MC Unit's unit address (i.e., the unit number + 10 hex).

This file can then be read from the Memory Card and verified.

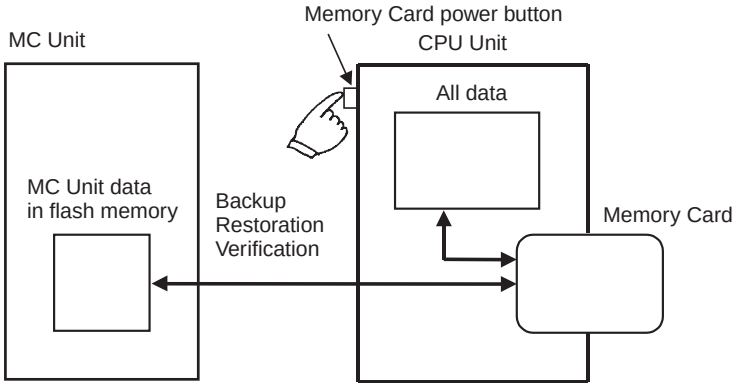

Note This function can be used only with the combination of models listed in the following table.

CPU Unit	MC Unit	
	CS1W-MC221-V1, CS1W-MC421-V1	CS1W-MC221, CS1W-MC421
CS1-H CPU Unit	Can be used.	No
CS1 CPU Unit	No	No

- Do not restore backup data created from an MC Unit with unit version 1.1 or later to a Pre-Ver. 1.1 MC Unit.
- Do not save any MC Unit data to the flash memory while the backup operation is in progress, or data will not be properly backed up, and a system parameters corrupted error (error code 0001) will occur when the data is restored (i.e., read from the Memory Card).
- The contents of the flash memory can be backed up even if it is corrupted, but a system parameters corrupted error (error code 0001) will occur when this data is restored (i.e., read from the Memory Card).

Applications

Use this function when creating backup data for the entire PLC, including the CPU Unit itself, DeviceNet Units, Serial Communications Units and Boards, etc., or when replacing an entire Unit.

Operations

Backing Up MC Unit Data Files to a Memory Card

Set the DIP switch on the CPU Unit's front panel as shown below, and then hold down the Memory Card power button for three seconds.

CPU Unit front panel DIP switch	
SW7	**SW8**
ON	OFF

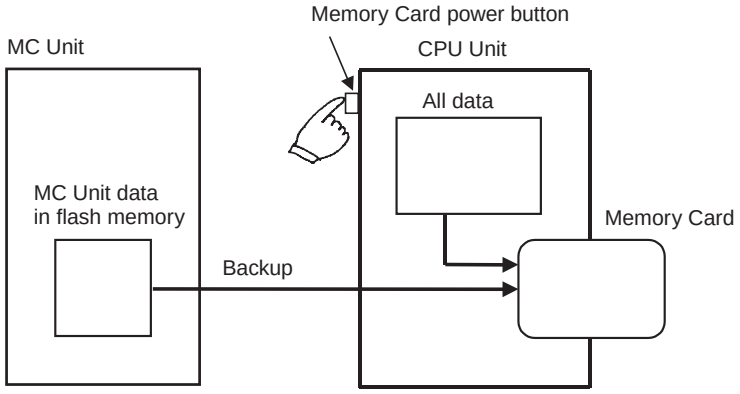

An MC Unit data file will be created and it will be written to the Memory Card along with the other backup files.

When the Memory Card power button is pressed, the MCPWR indicator on the CPU Unit's front panel will flash once and then remain lit while the data is being written. The indicator will then turn OFF after writing is completed successfully.

Restoring MC Unit Data Files from a Memory Card

The files on the Memory Card can be read and set in the MC Unit. Set the DIP switch on the CPU Unit's front panel as shown below, and then turn ON the power to the CPU Unit.

CPU Unit front panel DIP switch	
SW7	**SW8**
ON	OFF

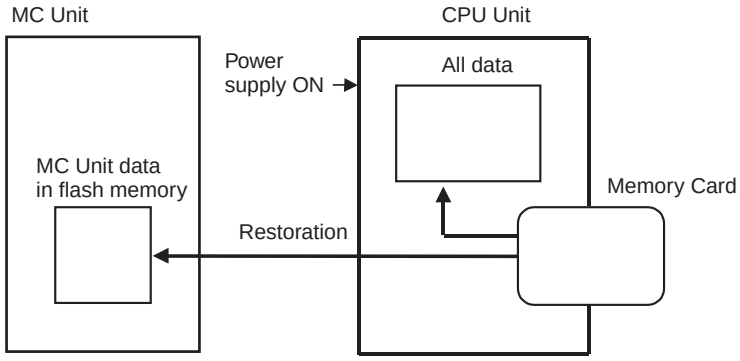

The MC Unit data file on the Memory Card will be read and it will be restored to the MC Unit.

Note During the restoration, data is read from the Memory Card to the MC Unit's internal RAM, and then the data is checked. If the data is normal, it is automatically written to the flash memory. If the data is not normal, a system parameters corrupted error (error code: 0001) will occur and the RAM will be initialized. In that case, the data will not be written to the flash memory.

When the power is turned ON, the MCPWR indicator on the CPU Unit's front panel will light. After flashing once, it will remain lit while the data is being read. The indicator will then turn OFF after reading is completed successfully.

Verifying the Data Against the MC Unit Data File on the Memory Card

Set the DIP switch on the CPU Unit's front panel as shown below, and then hold down the Memory Card power button for three seconds.

CPU Unit front panel DIP switch	
SW7	**SW8**
OFF	OFF

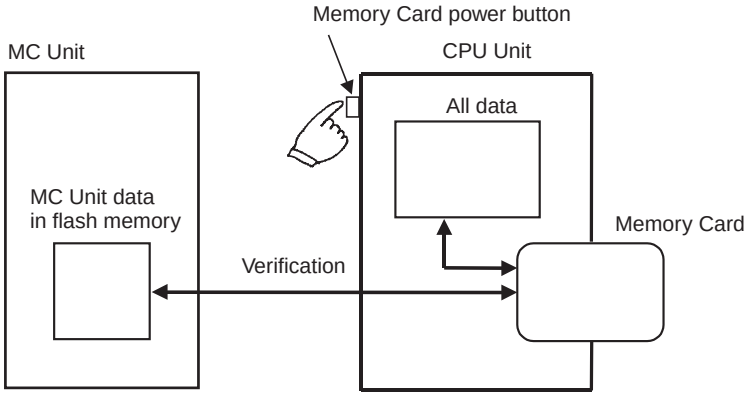

The MC Unit data file on the Memory Card will be compared with the data in the MC Unit's internal flash memory for verification.

When the Memory Card power button is pressed, the MCPWR indicator on the CPU Unit's front panel will flash once and then remain lit while the data is being compared. The indicator will then turn OFF if the data matches.

1-12-2-1 Position Data, IOWR Control Data, and G Codes for Customized Functions

Position Data

Position data addresses	Customized function	Use
1970 to 1985	Memory link function	Used as I/O data area
1986 to 1989	Memory link function	Used to specify position data addresses for destinations when using stopover M codes.
1990 to 1993	Linked traverse function	Used for operating parameters and start condition designation.
1994 to 1998	(Not used.)	(Not used.)
1999	High-speed general-purpose output function	Used as a setup area.

IOWR Instruction Control Data

IOWR instruction control data	Customized functions	Use
1838 to 183F hex	Memory link function	Used as link settings.
1840 hex	Synchronized control functions	Used as virtual axis settings.
FFFF hex	Customized function selection	Used for specifying whether individual customized functions are to be enabled or disabled.

G Codes

G code	Customized function	Use
G01	G-code command for synchronized control functions	Used as a G-code command for synchronized control functions in the format G01 <axis name> (E31) only. For any other operands, linear interpolation is performed as before.

1-12-2-2 Input Axis and Integrated Axis Operation

Position slippage may occur when certain functions are used with an input axis and integrated axis. These cases are listed in the following table.

The meanings of the symbols in the *Use* column are as follows:

Yes: Can be used. Conditional: Can be used under certain conditions. No: Cannot be used.

Axis operation	Use	Remarks
G00	Yes	---
G01	Yes	---
G02	Yes	---
G03	Yes	---
G26	Yes	---
G27	Yes	---
G28	No	Correct inputs cannot be obtained.
G30	Yes	---
G31	Conditional	Correct inputs cannot be obtained if the position command value is used and the deceleration time to the end point is less than 2 ms. If the time is 2 ms or greater or if there is an encoder, there is no problem.
G32	Yes	---
Electronic gear function	Yes	---
Electronic cam function	Yes	---
Origin search	No	Correct inputs cannot be obtained.
Reference origin return	Yes	---
JOG	Yes	---
Error counter reset	Conditional	Correct inputs cannot be obtained for position command values. There is no problem with the encoder.
Forced origin	Conditional	Position displays change, but inputs do not change.
ABS origin setting	No	Correct inputs cannot be obtained.
MPG	Yes	---
Servo-lock	Conditional	Axis movement is input by the wiring check.

1-12-2-3 Performance

1. How long is the processing time in the servo cycle?

   Differences in calculation time in the servo cycle. (Is there any effect on performance compared to the existing [G01/02] calculations?)

   G01 = Electronic gear < Electronic cam < G01 (two) < Electronic gear (two) < Electronic cam (two) < G02

   The startup time is designed so that it does not depend on the calculation time in the servo cycle. There is no problem in terms of the load because two electronic cams or electronic gears execute faster than one G02.

   There is, however, a possibility of an overload occurring if the G-code command for the register function is executed at the same time as G02. Therefore, do not allow the register function and G02 to be used together.

2. How much time is required for command interpretation when an electronic cam uses 100 points?

   With two points, it is faster than linear interpolation, but with 100 points it takes approximately 20 ms.

3. With an electronic cam, approximately how long is the period while waiting for a trigger?

   It is approximately twice as long as the time from one servo cycle to the next (i.e., approx. 2 to 4 ms).

4. How is the output axis PV handled during synchronized control, during an interruption, or at completion?

   The PV is controlled (held) in the normal way.

SECTION 2
Installation

This section describes the MC Unit components and provides the information required for installing the MC Unit.

2-1 Nomenclature and Unit Settings 102
2-1-1 Nomenclature 102
2-2 Installation 104
2-2-1 System Configuration Precautions 104
2-2-2 Mounting to the Backplane 104
2-2-3 Unit Handling Precautions 105
2-2-4 Dimensions 106
2-3 Wiring 107
2-3-1 I/O Connector 107
2-3-2 DRV Connectors 112
2-3-3 Driver Cables (Optional) 116
2-3-4 Wiring Connectors 118
2-3-5 Connection Examples for Special Servo Driver Cable 119
2-3-6 MPG Wiring 125
2-3-7 Interface Circuits 126
2-3-8 Wiring Precautions 128
2-3-9 Motor Runaway 130
2-3-10 Wiring Check Function 132
2-4 Failsafe Circuits 133
2-4-1 Failsafe Principles 134
2-4-2 Failures in the Command System 134
2-4-3 Failures in the Feedback System 138
2-4-4 Other Safety Features 138
2-5 Wiring Check Troubleshooting 139
2-5-1 Wiring Errors 139
2-5-2 Wiring Check Principles 139
2-5-3 Wiring Error Cause and Countermeasures 140
2-5-4 Checking for Wiring Errors 141
2-6 Changing the Mechanical Direction of Operation 141
2-7 Connecting Peripheral Devices 142
2-7-1 Connecting a Personal Computer to the CPU Unit 143
2-7-2 Connecting the Teaching Box 144

2-1 Nomenclature and Unit Settings

This section shows the names of the MC Unit components and explains the meanings of the LED indicators. It also explains how to set the unit number.

2-1-1 Nomenclature

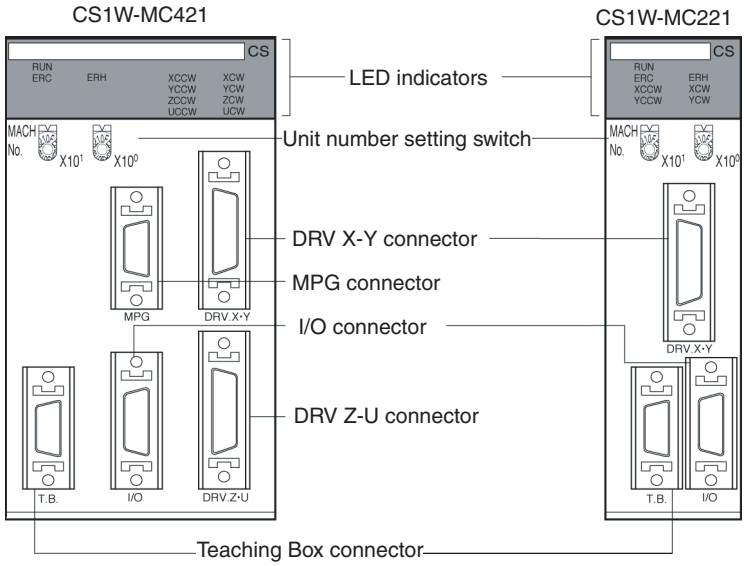

Indicators

The following table shows the meanings of the various LED indicators.

Indicator	Color	Status	Meaning
RUN	Green	ON	The MC Unit is operating normally.
		OFF	The MC Unit is not recognized by the CPU Unit or is malfunctioning.
ERC	Red	ON	An error occurred in the MC Unit.
		OFF	The MC Unit is operating normally.
ERH	Red	ON	An error occurred in the CPU Unit.
		OFF	The CPU Unit is operating normally.
XCCW YCCW ZCCW (See note.) UCCW (See note.)	Yellow	ON	The motor for the applicable axis is turning in the CCW direction. (The X to U axes correspond to XCCW to UCCW.)
		OFF	The applicable axis is stopped or is turning in the CW direction.
XCW YCW ZCW (See note.) UCW (See note.)	Yellow	ON	The motor for the applicable axis is turning in the CW direction. (The X to U axes correspond to XCW to UCW.)
		OFF	The applicable axis is stopped or is turning in the CCW direction.

Note The CS1W-MC221 does not have the ZCCW, UCCW, ZCW, and UCW indicators.

The XCCW, YCCW, XCW, and YCW indicators show the error contents when the ERC and ERH indicators light. For details, refer to *Section 12-2 Error Indicators*.

Unit No. Setting Switch

The unit number setting switch (MACHINE No.) is the switch that sets the MC Unit's unit number as a Special I/O Unit.



The unit number setting determines which words in the CPU Unit's Special I/O Unit area are allocated to the MC Unit. The CS1W-MC221 occupies 30 words, and the CS1W-MC421 occupies 50, so the unit numbers that can be set are as follows:

CS1W-MC221: 0 to 93
CS1W-MC421: 0 to 91

Unit number	Interface area	
	CS1W-MC421	CS1W-MC221
0	CIO 2000 to CIO 2049	CIO 2000 to CIO 2029
1	CIO 2010 to CIO 2059	CIO 2010 to CIO 2039
2	CIO 2020 to CIO 2069	CIO 2020 to CIO 2049
to	to	to
X	CIO n to CIO n+49	CIO n to CIO n+29
to	to	to
91	CIO 2910 to CIO 2959	CIO 2910 to CIO 2939
92	Cannot be set.	CIO 2920 to CIO 2949
93	Cannot be set.	CIO 2930 to CIO 2959
94	Cannot be set.	Cannot be set.
95	Cannot be set.	Cannot be set.

n = 2000 + 10 x unit number

If anything other than the above is set, an error will be generated when the power is turned ON.

As long as it does not overlap with the unit number of another Special I/O Unit mounted at the same PLC, any settings can be made within these ranges.

Connectors

- **I/O Connector**
  The connector for external inputs and outputs, including limit inputs, emergency stop inputs, origin proximity inputs, general inputs, and general outputs, for each axis. Special cables and terminal blocks are available.
- **DRV Connectors**
  The connector for connecting to the servo driver. A Driver Cable is available for connecting to OMRON G-, W-, U-, M-, or H-series Servo Drivers.

  The DRV X-Y connector is for the X and Y axes, and the DRV Z-U connector is for the Z and U axes
- **Teaching Box Connector**
  The connector for the Teaching Box.
- **MPG Connector (CS1W-MC421 Only)**
  The connector for an MPG (Manual Pulse Generator) or a sync encoder.

2-2 Installation

2-2-1 System Configuration Precautions

- Words in I/O memory are allocated to the MC Unit according to the setting of the unit number switch on the front panel of the Unit. Allocations are not affected by the slot in which the Unit is mounted.
- MC Units can be mounted to CS1W-BC□□3 CPU Backplanes and CS1W-BI□□3 CS1 Expansion Backplanes.

2-2-2 Mounting to the Backplane

Use the following steps to mount or remove MC Units.

1,2,3... 1. Mount the Unit to the Backplane by hooking the top of the Unit into the slot on the Backplane and rotating the Unit downwards.

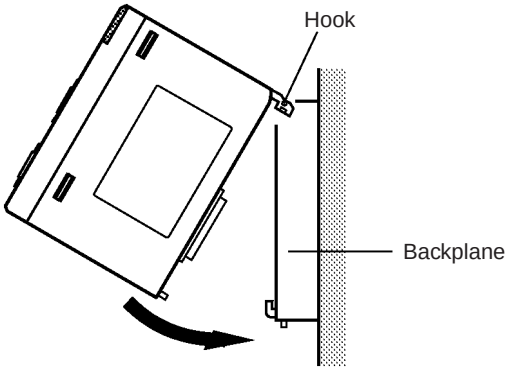

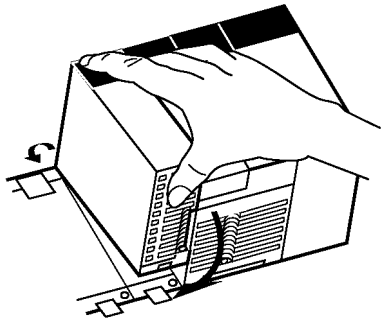

2. Make sure that the connector on the back of the Unit is properly inserted into the connector in the Backplane.
3. Use a Phillips screwdriver to tighten the screw on the bottom of the Unit. The screwdriver must be held at a slight angle, so be sure to leave enough space below the Rack.

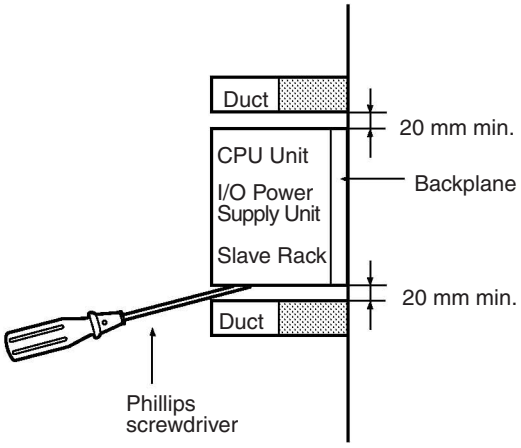

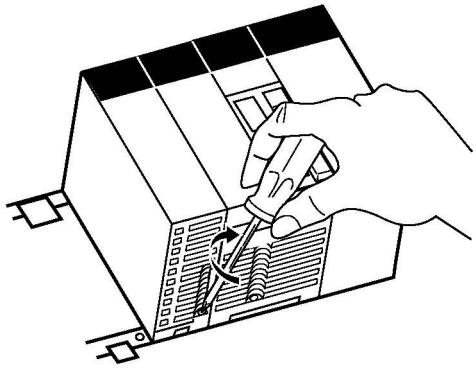

Note Tighten the screw to a torque of 0.4 N·m.

To remove the Unit, loosen the screw with a Phillips screwdriver, rotate the Unit upwards, and then remove it.

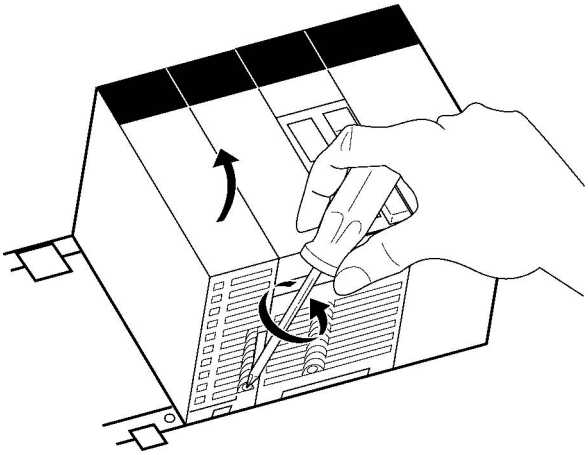

2-2-3 Unit Handling Precautions

- Always turn OFF the CPU Unit before mounting or removing a MC Unit or connecting or disconnecting cables to/from the MC Unit.
- Place the port connecting cables in a different duct from those for high-voltage lines or power lines to prevent the effects of electrical noise from these lines.
- Do not remove the protective label from the top of the Unit until wiring has been completed. This label prevents wire strands and other foreign matter from entering the Unit during wiring. Remove the label after wiring has been completed to allow air circulation needed for cooling.

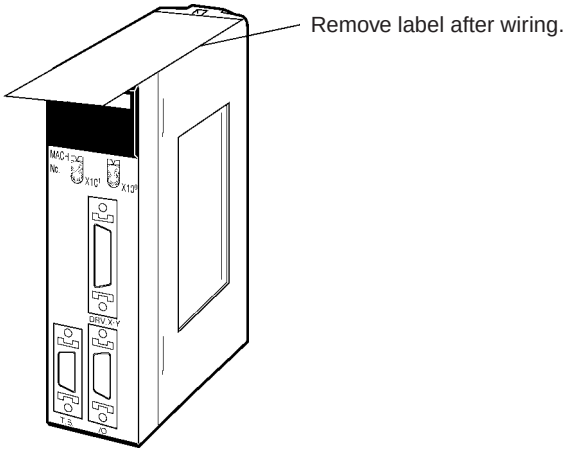

2-2-4 Dimensions

CS1W-MC421

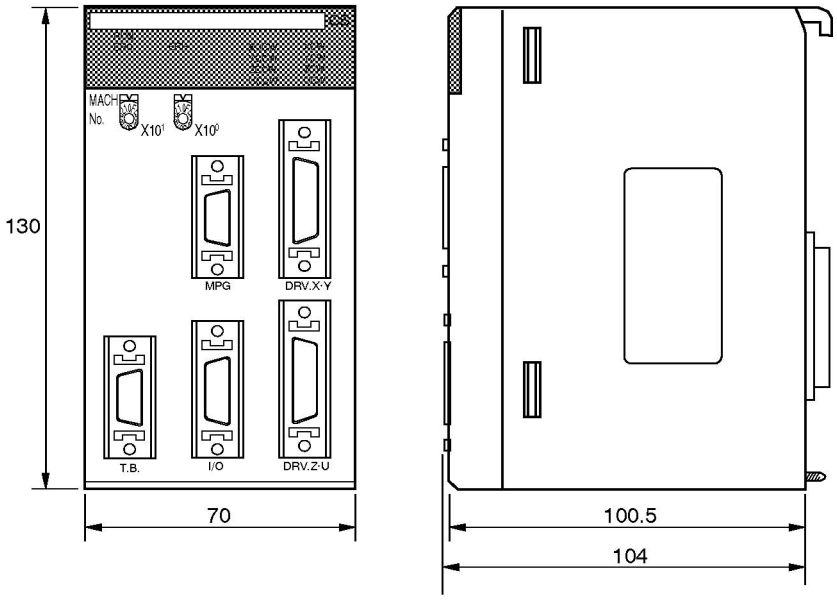

CS1W-MC221

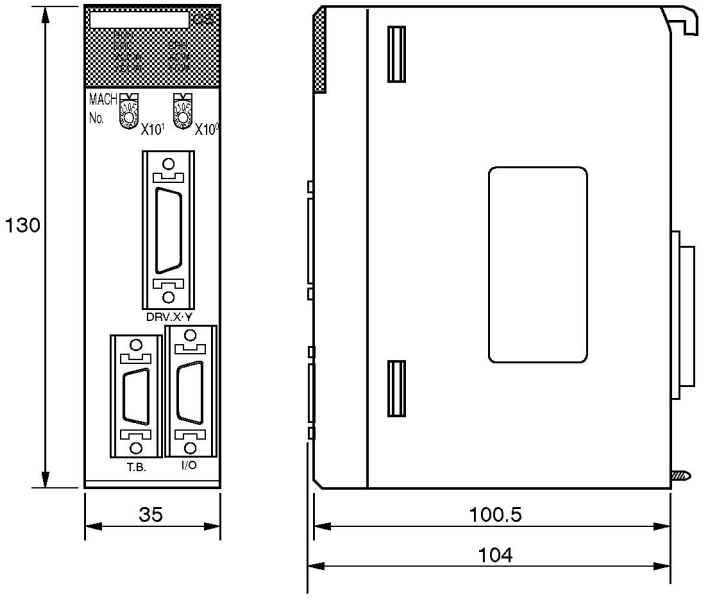

Dimensions When Mounted

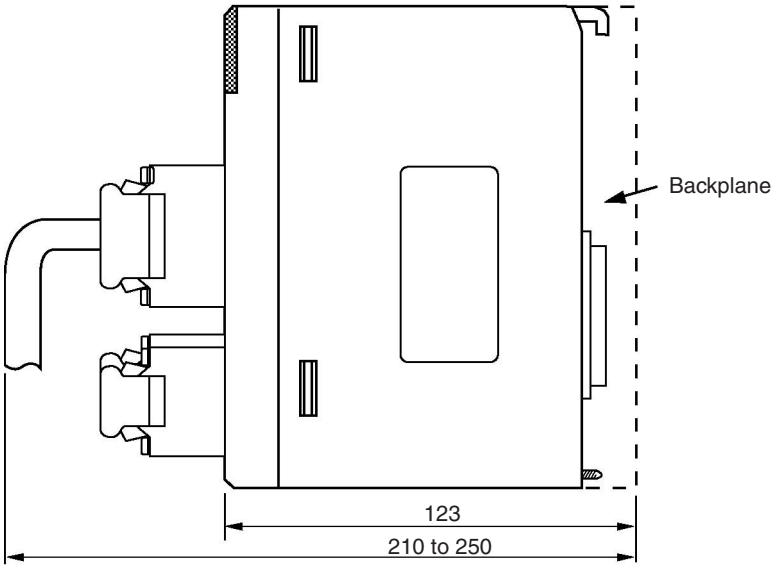

2-3 Wiring

2-3-1 I/O Connector

The I/O connector is used primarily for wiring to external I/O. There are connections for each axis's CW and CCW limit inputs, emergency stop inputs, and origin proximity inputs, as well as general I/O connections. Special cables and terminals can be connected to the I/O connector.

Snap-on Connector

Connector (1): 10126-3000PE (Sumitomo 3M)
Case (1): 10326-52F0-008 (Sumitomo 3M)

CS1W-MC221

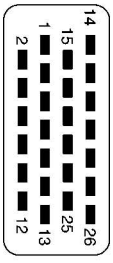

2	XCWL	1	+24	15	—	14	DC GND
4	XCCWL	3	YCWL	17	MPG-B	16	MPG-A
6	XSTOP	5	YCCWL	19	MPG-$\overline{B}$	18	MPG-$\overline{A}$
8	IN1	7	YSTOP	21	IN3	20	—
10	XORG	9	IN2	23	—	22	IN4
12	OUT1	11	YORG	25	OUT3	24	—
		13	OUT2			26	OUT4

Connector pin arrangement

CS1W-MC421

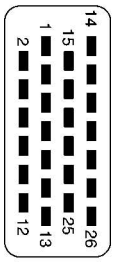

2	XCWL	1	+24	15	ZCWL	14	DC GND
4	XCCWL	3	YCWL	17	ZCCWL	16	UCWL
6	XSTOP	5	YCCWL	19	ZSTOP	18	UCCWL
8	IN1	7	YSTOP	21	IN3	20	USTOP
10	XORG	9	IN2	23	ZORG	22	IN4
12	OUT1	11	YORG	25	OUT3	24	UORG
		13	OUT2			26	OUT4

Connector pin arrangement

Attaching a Connector

Attach the connector as follows:

- Use the connector (snap-on type) provided with the Unit.
- Use the anti-electrostatic screws provided with the Unit. There are eight screws for the CS1W-MC421 and four for the CS1W-MC221.

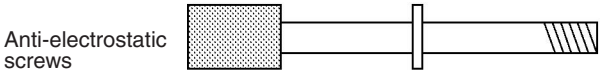

MC221 Pin Functions

The following table gives the names of the CS1W-MC221 I/O connector pins, and explains their functions.

Pin	Symbol (See note 1.)	Name	Function
1	+24V	24-VDC input	Connects to the + terminal of the 24-VDC external power supply.
2	XCWL (NC)	X-axis CW limit input	Limits movement of the X axis in the CW direction.
3	YCWL (NC)	Y-axis CW limit input	Limits movement of the Y axis in the CW direction.
4	XCCWL (NC)	X-axis CCW limit input	Limits movement of the X axis in the CCW direction.
5	YCCWL (NC)	Y-axis CCW limit input	Limits movement of the Y axis in the CCW direction.
6	XSTOP (NC)	X-axis emergency stop input	Disables the X-axis run output and stops it.
7	YSTOP (NC)	Y-axis emergency stop input	Disables the Y-axis run output and stops it.
8	IN1 (NO)	General input 1	General input 1
9	IN2 (NO)	General input 2	General input 2
10	XORG (NC,NO) (See note 2.)	X-axis origin proximity input	Used for the X-axis origin search.
11	YORG (NC,NO) (See note 2.)	Y-axis origin proximity input	Used for the Y-axis origin search.
12	OUT1 (See note 4.)	General output 1	General output 1 or X-axis brake signal output
13	OUT2 (See note 4.)	General output 2	General output 2 or Y-axis brake signal output
14	DC GND	24-VDC input ground	Connects to the – terminal (0 V) of the 24-VDC external power supply.
15	---		
16	MPG-A	MPG input phase A	MPG input phase A
17	MPG-B	MPG input phase B	MPG input phase B
18	MPG-$\overline{A}$	MPG input phase $\overline{A}$	MPG input phase $\overline{A}$
19	MPG-$\overline{B}$	MPG input phase $\overline{B}$	MPG input phase $\overline{B}$
20	---		
21	IN3 (NO)	General input 3	General input 3
22	IN4 (NO)	General input 4	General input 4
23	---		
24	---		
25	OUT3	General output 3	General output 3
26	OUT4	General output 4	General output 4

Note

1. “NC” stands for normally closed and “NO” stands for normally open.
2. Either NC or NO logic can be used for the origin proximity inputs. This setting is a machine parameter.
3. Pin numbers 15, 20, 23, and 24 are not used.
4. General outputs cannot directly drive the motor brake. They must be utilized through bit control.
5. Always short unused NO input terminals to the DC ground on the connector.

MC421 Pin Functions

The following table gives the names of the CS1W-MC421 I/O connector pins, and explains their functions.

Pin	Symbol (See note 1.)	Name	Function
1	+24V	24-VDC input	Connects to the + terminal of the 24-VDC external power supply.
2	XCWL(NC)	X-axis CW limit input	Limits movement of the X axis in the CW direction.
3	YCWL(NC)	Y-axis CW limit input	Limits movement of the Y axis in the CW direction.
4	XCCWL(NC)	X-axis CCW limit input	Limits movement of the X axis in the CCW direction.
5	YCCWL(NC)	Y-axis CCW limit input	Limits movement of the Y axis in the CCW direction.
6	XSTOP(NC)	X-axis emergency stop input	Disables the X-axis run output and stops it.
7	YSTOP(NC)	Y-axis emergency stop input	Disables the Y-axis run output and stops it.
8	IN1(NO)	General input 1	General input 1
9	IN2(NO)	General input 2	General input 2
10	XORG(NC,NO) (See note 2.)	X-axis origin proximity input	Used for the X-axis origin search.
11	YORG(NC,NO) (See note 2.)	Y-axis origin proximity input	Used for the Y-axis origin search.
12	OUT1 (See note 3.)	General output 1	General output 1 or X-axis brake signal output
13	OUT2 (See note 3.)	General output 2	General output 2 or Y-axis brake signal output
14	DC GND	24-VDC input ground	Connects to the – terminal (0 V) of the 24-VDC external power supply.
15	ZCWL (NC)	Z-axis CW limit input	Limits movement of the Z axis in the CW direction.
16	UCWL (NC)	U-axis CW limit input	Limits movement of the U axis in the CW direction.
17	ZCCWL (NC)	Z-axis CCW limit input	Limits movement of the Z axis in the CCW direction.
18	UCCWL (NC)	U-axis CCW limit input	Limits movement of the U axis in the CCW direction.
19	ZSTOP (NC)	Z-axis emergency stop input	Disables the Z-axis run output and stops it.
20	USTOP (NC)	U-axis emergency stop input	Disables the U-axis run output and stops it.
21	IN3 (NO)	General input 3	General input 3
22	IN4 (NO)	General input 4	General input 4
23	ZORG (NC, NO) (See note 2.)	Z-axis origin proximity input	Used for the Z-axis origin search.
24	UORG (NC, NO) (See note 2.)	U-axis origin proximity input	Used for the U-axis origin search.
25	OUT3 (See note 2.)	General output 3	General output 3
26	OUT4 (See note 2.)	General output 4	General output 4

Note

1. “NC” stands for normally closed and “NO” stands for normally open.
2. Either NC or NO logic can be used for the origin proximity inputs. This setting is a machine parameter.
3. General outputs cannot directly drive the motor brake. They must be utilized through bit control.
4. Always short unused NO input terminals to the DC ground on the connector.

Connection Example

The following diagram shows an example connection for just the X axis. Wire the Y, Z, and U axes in the same way.

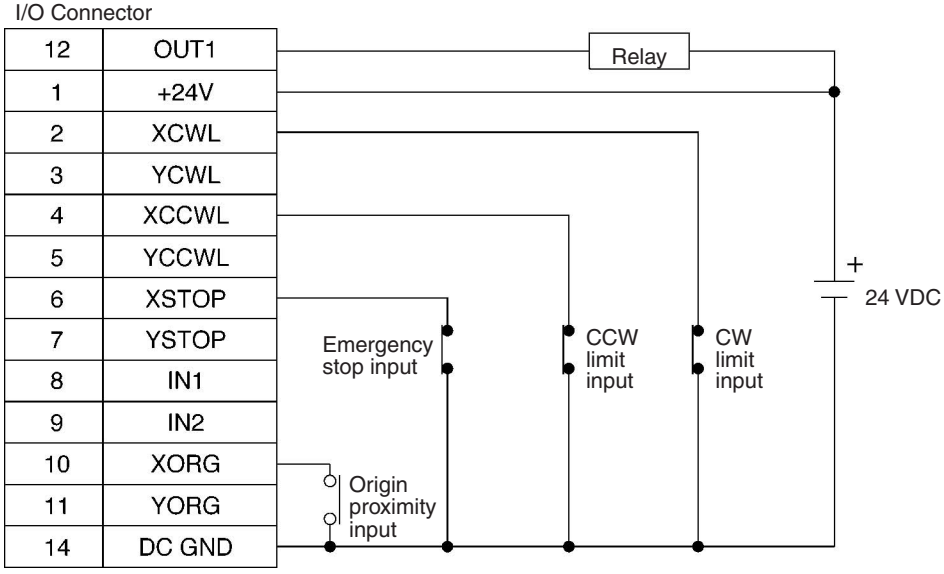

Cable and Terminals For CS1W-MC221

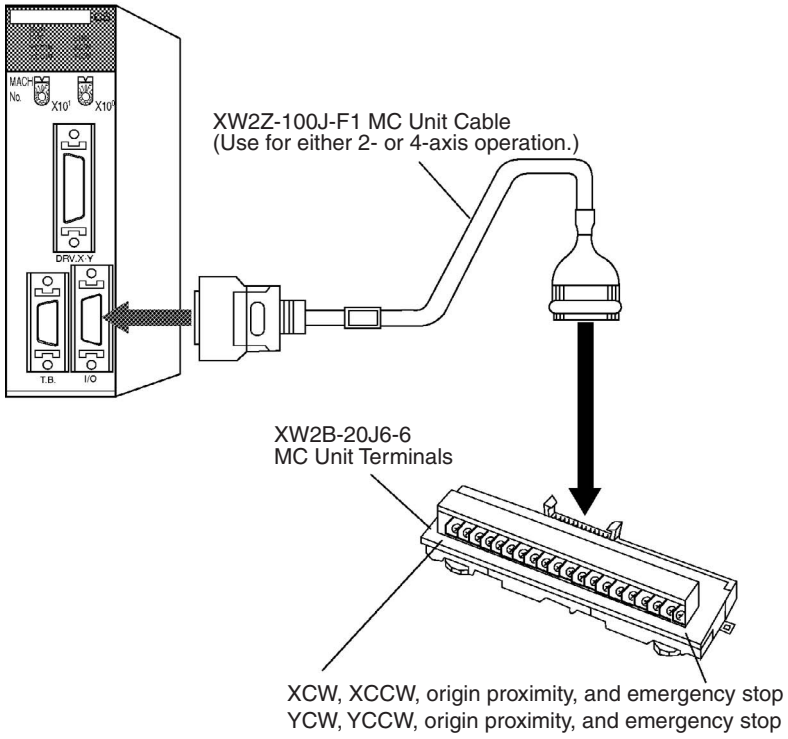

Connection Example

The following diagram shows an example connection for just the X axis of the CS1W-MC221. Wire the Y axis in the same way.

XW2B-2036-6

Terminal No.	Label
0	0V
1	COM
2	COM
3	COM
4	IN1
5	COM
6	COM
7	COM
8	YSTOP
9	IN2
10	+24V
11	XCWL
12	XCCWL
13	XORG
14	XSTOP
15	OUT1
16	YCWL
17	YCCWL
18	YORG
19	OUT2

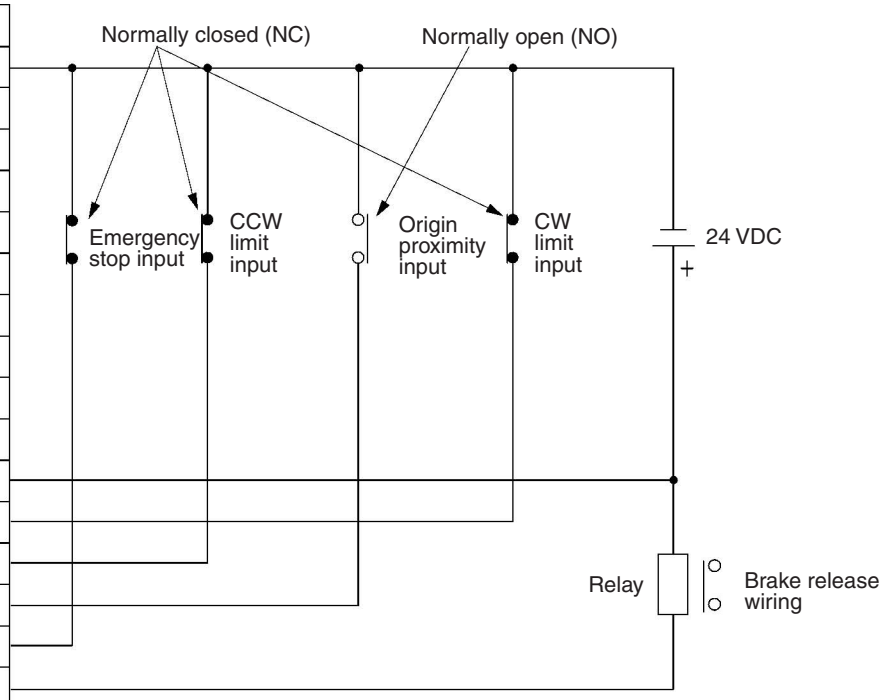

Use the XW2B-40J6-J Terminal Block for the CS1W-MC421.

XW2B-40J6-7

Terminal No.	Label	Terminal No.	Label
0	0 V	20	+24 V
1	COM	21	XCWL
2	COM	22	XCCWL
3	COM	23	XORG
4	IN1	24	XSTOP
5	COM	25	OUT1
6	COM	26	YCWL
7	COM	27	YCCWL
8	YSTOP	28	YORG
9	IN2	29	OUT2
10	Not used.	30	Not used.
11	COM	31	ZCWL
12	COM	32	ZCCWL
13	COM	33	ZORG
14	IN3	34	ZSTOP
15	COM	35	OUT3
16	COM	36	UCWL
17	COM	37	UCCWL
18	USTOP	38	UORG
19	IN4	39	OUT4

2-3-2 DRV Connectors

The DRV connectors are used primarily to connect servo drivers. The DRV X-Y connector is for the X and Y axes, and the DRV Z-U connector is for the Z and U axes.

Note Special driver cables, which are sold separately, are available for OMRON G, W, U-, H-, and M-series Servo Drivers. Refer to *Section 2-3-3 Driver Cables (Optional)*.

Snap-on Connectors

Connectors (2): 10136-3000PE (Sumitomo 3M)
Cases (2): 10336-52F0-008 (Sumitomo 3M)

DRV X-Y Pin Allocation

The following diagram shows the pin allocation for the DRV X-Y connector. Pins 6, 7, 24, and 25 are not used.

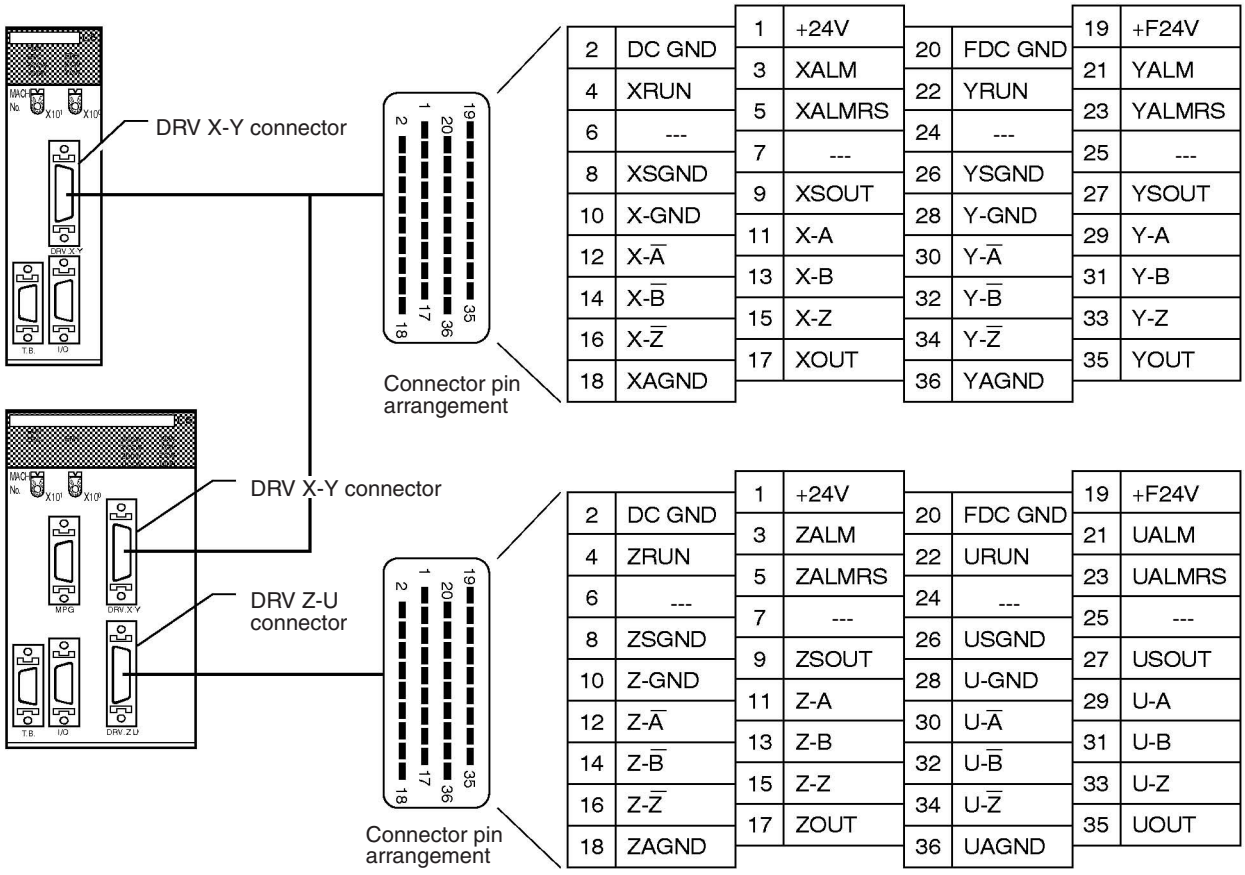

2	DC GND	1	+24V	20	FDC GND	19	+F24V
4	XRUN	3	XALM	22	YRUN	21	YALM
6	---	5	XALMRS	24	---	23	YALMRS
8	XSGND	7	---	26	YSGND	25	---
10	X-GND	9	XSOUT	28	Y-GND	27	YSOUT
12	X-$\overline{A}$	11	X-A	30	Y-$\overline{A}$	29	Y-A
14	X-$\overline{B}$	13	X-B	32	Y-$\overline{B}$	31	Y-B
16	X-$\overline{Z}$	15	X-Z	34	Y-$\overline{Z}$	33	Y-Z
18	XAGND	17	XOUT	36	YAGND	35	YOUT

2	DC GND	1	+24V	20	FDC GND	19	+F24V
4	ZRUN	3	ZALM	22	URUN	21	UALM
6	---	5	ZALMRS	24	---	23	UALMRS
8	ZSGND	7	---	26	USGND	25	---
10	Z-GND	9	ZSOUT	28	U-GND	27	USOUT
12	Z-$\overline{A}$	11	Z-A	30	U-$\overline{A}$	29	U-A
14	Z-$\overline{B}$	13	Z-B	32	U-$\overline{B}$	31	U-B
16	Z-$\overline{Z}$	15	Z-Z	34	U-$\overline{Z}$	33	U-Z
18	ZAGND	17	ZOUT	36	UAGND	35	UOUT

Attaching Connectors

Attach the connectors as follows:

- Use the connectors (snap-on type) provided with the Unit.
- Use the anti-electrostatic screws provided with the Unit. There are eight screws for the CS1W-MC421 and four for the CS1W-MC221.

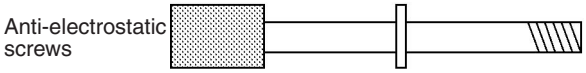

DRV X-Y Pin Functions The following table explains the functions of the pins in the DRV X-Y connector.

Pin	Symbol	Name	Function
1	+24V	24 VDC input	External power supply's 24-VDC input (for the X-Y axes)
2	DC GND	24 VDC input ground	External power supply's 24-VDC ground (for the X-Y axes)
3	XALM	X-axis alarm input	Driver alarm input for the X-axis
4	XRUN	X-axis run output	Driver run output for the X-axis
5	XALMRS	X-axis alarm reset output	Reset output for the X-axis's driver alarm.
6 to 7	---	---	Not used.
8	XSGND	X-axis SEN signal ground	SEN signal ground for the X-axis
9	XSOUT	X-axis SEN signal output	SEN signal output for the X-axis (absolute encoder driver)
10	X-GND	X-axis feedback ground	Feedback ground for the X-axis
11	X-A	X-axis phase A input	Phase A feedback input for the X-axis
12	X-$\overline{A}$	X-axis phase $\overline{A}$ input	Phase $\overline{A}$ feedback input for the X-axis
13	X-B	X-axis phase B input	Phase B feedback input for the X-axis
14	X-$\overline{B}$	X-axis phase $\overline{B}$ input	Phase $\overline{B}$ feedback input for the X-axis
15	X-Z	X-axis phase Z input	Phase Z feedback input for the X-axis
16	X-$\overline{Z}$	X-axis phase $\overline{Z}$ input	Phase $\overline{Z}$ feedback input for the X-axis
17	XOUT	X-axis speed control	Speed control voltage to the X-axis driver
18	XAGND	X-axis speed control ground	Ground for the X-axis's speed control voltage
19	+F24V	24 VDC output	24-VDC input to the driver (for the X-Y axes)
20	FDC GND	24 VDC output ground	Ground for 24-VDC outputs (for the X-Y axes)
21	YALM	Y-axis alarm input	Driver alarm input for the Y-axis
22	YRUN	Y-axis run output	Driver run output for the Y-axis
23	YALMRS	Y-axis alarm reset output	Reset output for the Y-axis's driver alarm.
24 to 25	---	---	Not used.
26	YSGND	Y-axis SEN signal ground	SEN signal ground for the Y-axis
27	YSOUT	Y-axis SEN signal output	SEN signal output for the Y-axis (absolute encoder driver)
28	Y-GND	Y-axis feedback ground	Feedback ground for the Y-axis
29	Y-A	Y-axis phase A input	Phase A feedback input for the Y-axis
30	Y-$\overline{A}$	Y-axis phase $\overline{A}$ input	Phase $\overline{A}$ feedback input for the Y-axis
31	Y-B	Y-axis phase B input	Phase B feedback input for the Y-axis
32	Y-$\overline{B}$	Y-axis phase $\overline{B}$ input	Phase $\overline{B}$ feedback input for the Y-axis
33	Y-Z	Y-axis phase Z input	Phase Z feedback input for the Y-axis
34	Y-$\overline{Z}$	Y-axis phase $\overline{Z}$ input	Phase $\overline{Z}$ feedback input for the Y-axis
35	YOUT	Y-axis speed control	Speed control voltage to the Y-axis driver
36	YAGND	Y-axis speed control ground	Ground for the Y-axis's speed control voltage

Note Use only the wiring shown on pages 119 to 124 for pins 19 and 20. If any other wiring is used, components in the Unit may fail.

DRV Z-U Pin Functions The following table explains the functions of the pins in the DRV Z-U connector. This connector is on the CS1W-MC421 only.

Pin	Symbol	Name	Function
1	+24V	24 VDC input	External power supply's 24-VDC input (for the Z-U axes)
2	DC GND	24 VDC input ground	External power supply's 24-VDC ground (for the Z-U axes)
3	ZALM	Z-axis alarm input	Driver alarm input for the Z-axis
4	ZRUN	Z-axis run output	Driver run output for the Z-axis
5	ZALMRS	Z-axis alarm reset output	Reset output for the Z-axis's driver alarm.
6 to 7	---	---	Not used.
8	ZSGND	Z-axis SEN signal ground	SEN signal ground for the Z-axis
9	ZSOUT	Z-axis SEN signal output	SEN signal output for the Z-axis (absolute encoder driver)
10	Z-GND	Z-axis feedback ground	Feedback ground for the Z-axis
11	Z-A	Z-axis phase A input	Phase A feedback input for the Z-axis
12	Z-$\overline{A}$	Z-axis phase $\overline{A}$ input	Phase $\overline{A}$ feedback input for the Z-axis
13	Z-B	Z-axis phase B input	Phase B feedback input for the Z-axis
14	Z-$\overline{B}$	Z-axis phase $\overline{B}$ input	Phase $\overline{B}$ feedback input for the Z-axis
15	Z-Z	Z-axis phase Z input	Phase Z feedback input for the Z-axis
16	Z-$\overline{Z}$	Z-axis phase $\overline{Z}$ input	Phase $\overline{Z}$ feedback input for the Z-axis
17	ZOUT	Z-axis speed control	Speed control voltage to the Z-axis driver
18	ZAGND	Z-axis speed control ground	Ground for the Z-axis's speed control voltage
19	+F24V	24 VDC output	24-VDC input to the driver (for the Z-U axes)
20	FDC GND	24 VDC output ground	Ground for 24-VDC outputs (for the Z-U axes)
21	UALM	U-axis alarm input	Driver alarm input for the U-axis
22	URUN	U-axis run output	Driver run output for the U-axis
23	UALMRS	U-axis alarm reset output	Reset output for the U-axis's driver alarm.
24 to 25	---	---	Not used.
26	USGND	U-axis SEN signal ground	SEN signal ground for the U-axis
27	USOUT	U-axis SEN signal output	SEN signal output for the U-axis (absolute encoder driver)
28	U-GND	U-axis feedback ground	Feedback ground for the U-axis
29	U-A	U-axis phase A input	Phase A feedback input for the U-axis
30	U-$\overline{A}$	U-axis phase $\overline{A}$ input	Phase $\overline{A}$ feedback input for the U-axis
31	U-B	U-axis phase B input	Phase B feedback input for the U-axis
32	U-$\overline{B}$	U-axis phase $\overline{B}$ input	Phase $\overline{B}$ feedback input for the U-axis
33	U-Z	U-axis phase Z input	Phase Z feedback input for the U-axis
34	U-$\overline{Z}$	U-axis phase $\overline{Z}$ input	Phase $\overline{Z}$ feedback input for the U-axis
35	UOUT	U-axis speed control	Speed control voltage to the U-axis driver
36	UAGND	U-axis speed control ground	Ground for the U-axis's speed control voltage

Note Use only the wiring shown on pages 119 to 124 for pins 19 and 20. If any other wiring is used, components in the Unit may fail.

2-3-3 Driver Cables (Optional)

When using OMRON's U-, H-, M-, W-, or G-series Servo Drivers, use Special Driver Cables that are available as options to connect the MC Unit to Servo Drivers. These Special Driver Cables will eliminate the need for wiring.

The following Driver Connection Cables are available.

Series	For two axes	For single axis	Length (m)
R88D-U for 30-W to 750-W Servo Drivers	R88A-CPU001M2	R88A-CPU001M1	1.0
	R88A-CPU002M2	R88A-CPU002M1	2.0
R88D-U for 1-W to 5-kW Servo Drivers	R88A-CPUB001M2	R88A-CPUB001M1	1.0
	R88A-CPUB002M2	R88A-CPUB002M1	2.0
R88D-H	R88A-CPH001M2	R88A-CPH001M1	1.0
	R88A-CPH002M2	R88A-CPH002M1	2.0
R88D-M	R88A-CPM001M2	R88A-CPM001M1	1.0
	R88A-CPM002M2	R88A-CPM002M1	2.0
R88D-W	R88A-CPW001M2	R88A-CPW001M1	1.0
	R88A-CPW002M2	R88A-CPW002M1	2.0
	R88A-CPW003M2	R88A-CPW003M1	3.0
	R88A-CPW005M2	R88A-CPW005M1	5.0
R88D-G	R88A-CPG001M2	R88A-CPG001M1	1.0
	R88A-CPG002M2	R88A-CPG002M1	2.0
	R88A-CPG003M2	R88A-CPG003M1	3.0
	R88A-CPG005M2	R88A-CPG005M1	5.0

R88A-CPU001M2/002M2 (For U Series)
R88A-CPUB001M2/002M2

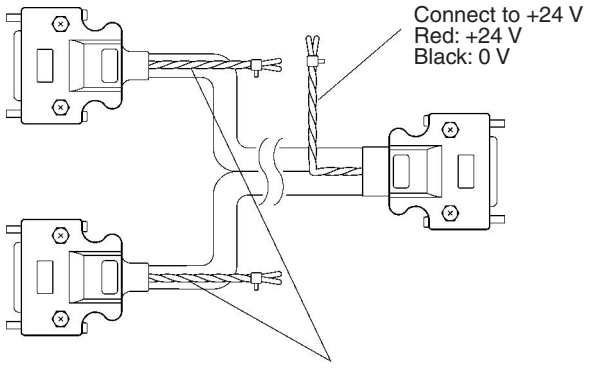

Connect to a battery when using the absolute encoder.
Red: Positive
Black: Negative

R88A-CPH001M2/002M2 (For H Series)

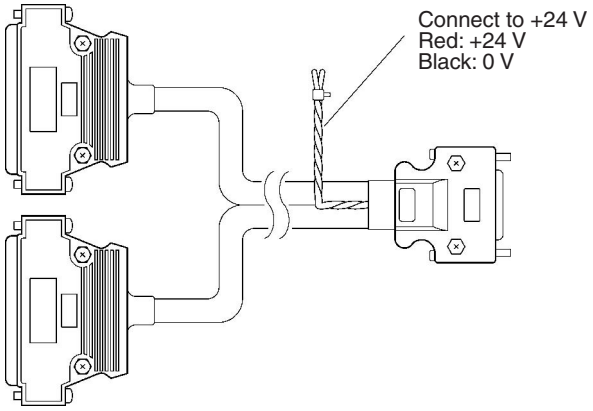

R88A-CPM001M2/002M2 (For M Series)

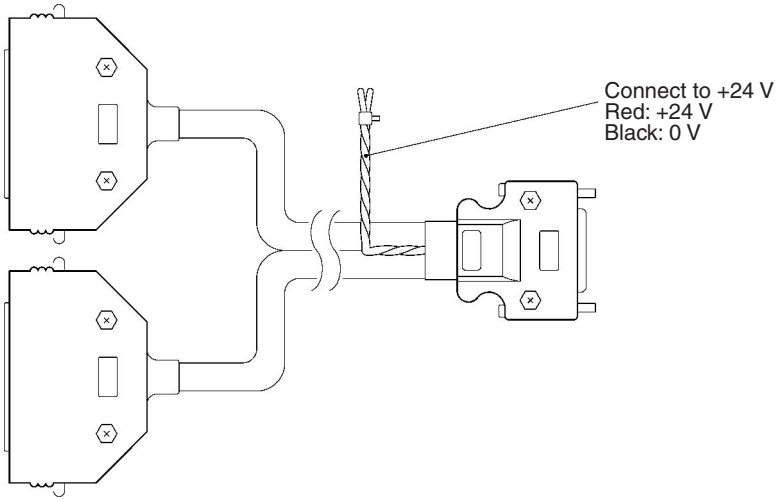

For Cables for single-axis models, only one connector is available for the MC Unit side and only the X-axis or Z-axis signal line is wired.

If the above Cables are not used, then use the connector and case provided with the Unit and connect them in combination with the connector.

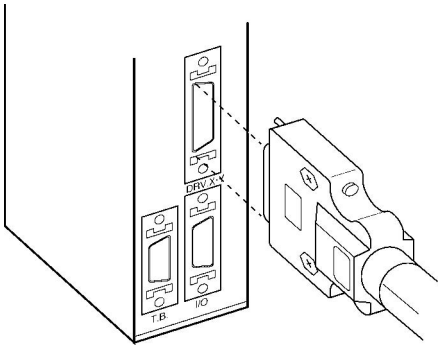

2-3-4 Wiring Connectors

1,2,3...

1. Pass each wire through heat-shrink tubing.
2. Spot-solder the wires and connector terminals.
3. Solder the wires.

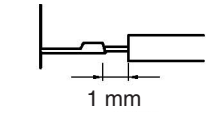

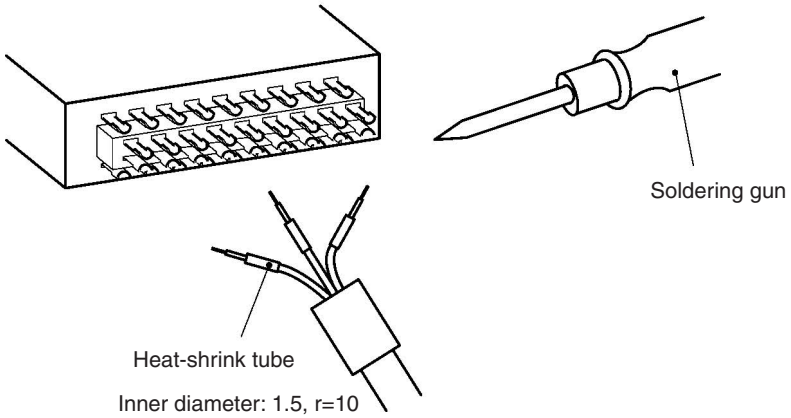

4. Pull the heat-shrink tubing back over the soldered area and heat the tubing to shrink it.

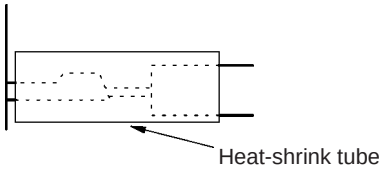

2-3-5 Connection Examples for Special Servo Driver Cable

Connection to G-series Models

Special Driver Cable: R88A-CPG00□M2

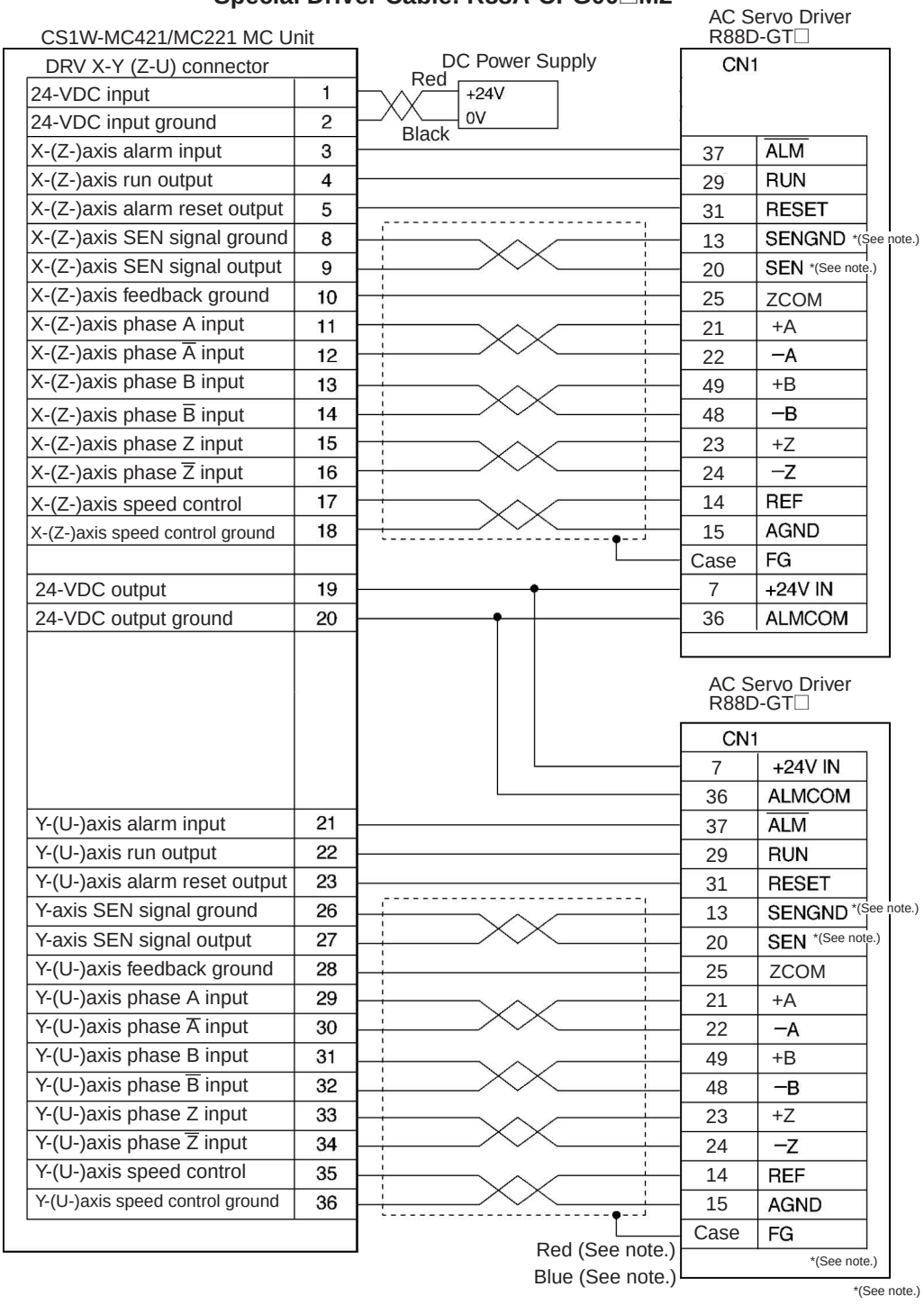

Note

1. Signals marked with asterisks are used with an absolute encoder. These signals will be connected even for an incremental encoder if the specified cable is used, but this will not interfere with operation. Do not connect these signals when wiring a custom cable for an incremental encoder.
2. Use only the wiring shown above for pins 19 and 20. If any other wiring is used, components in the Unit may fail.

Connection to U-series (30-W to 750-W) Models (Using an Absolute Encoder)

Special Driver Cable: R88A-CPU00 M2

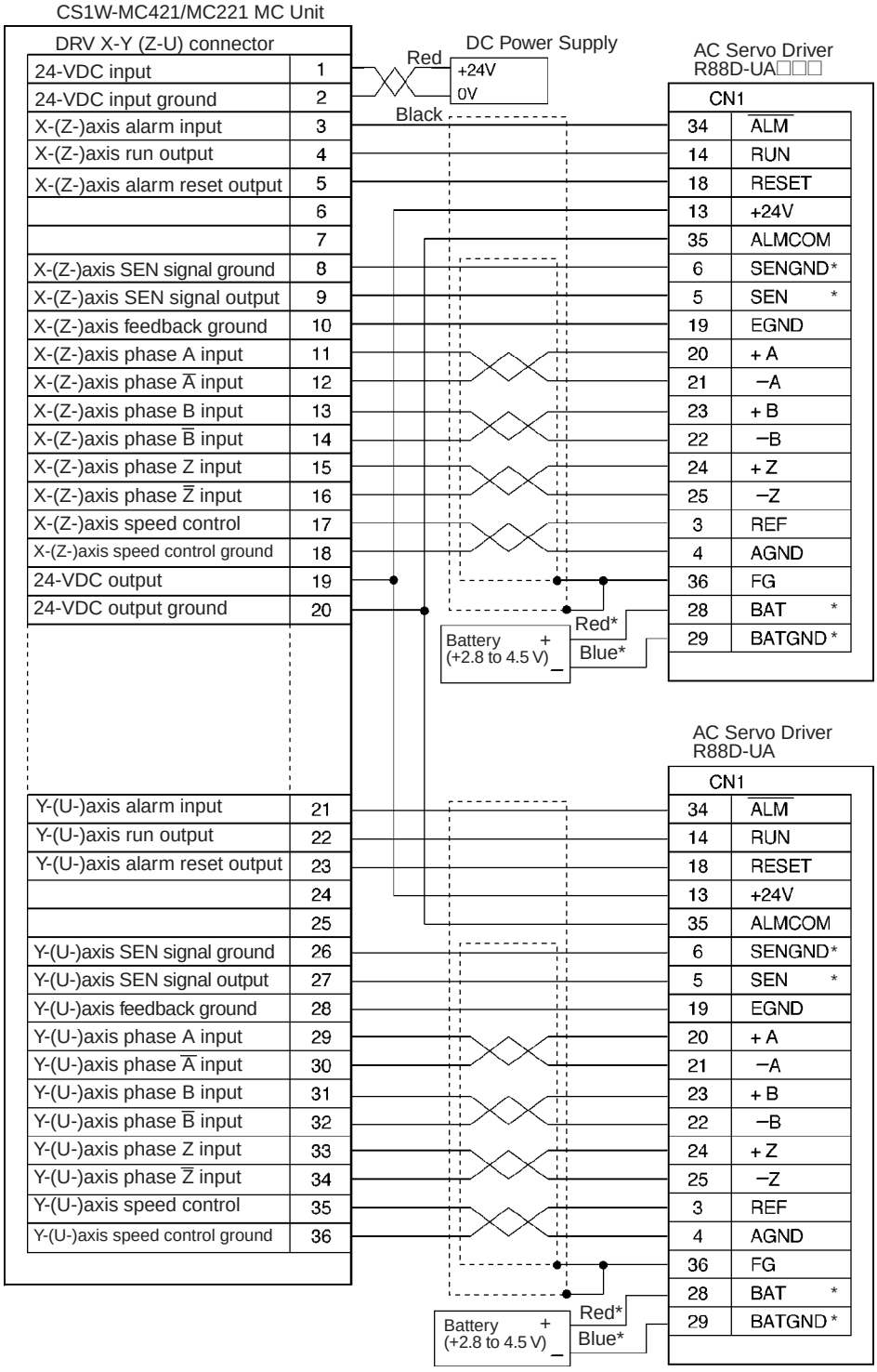

Note

1. Signals marked with asterisks are used with an absolute encoder. These signals will be connected even for an incremental encoder if the specified cable is used, but this will not interfere with operation. Do not connect these signals when wiring a custom cable for an incremental encoder.
2. Use only the wiring shown above for pins 19 and 20. If any other wiring is used, components in the Unit may fail.

Connection to U-series (1kW and Higher) Models

Special Driver Cable: R88A-CPUB00□M2

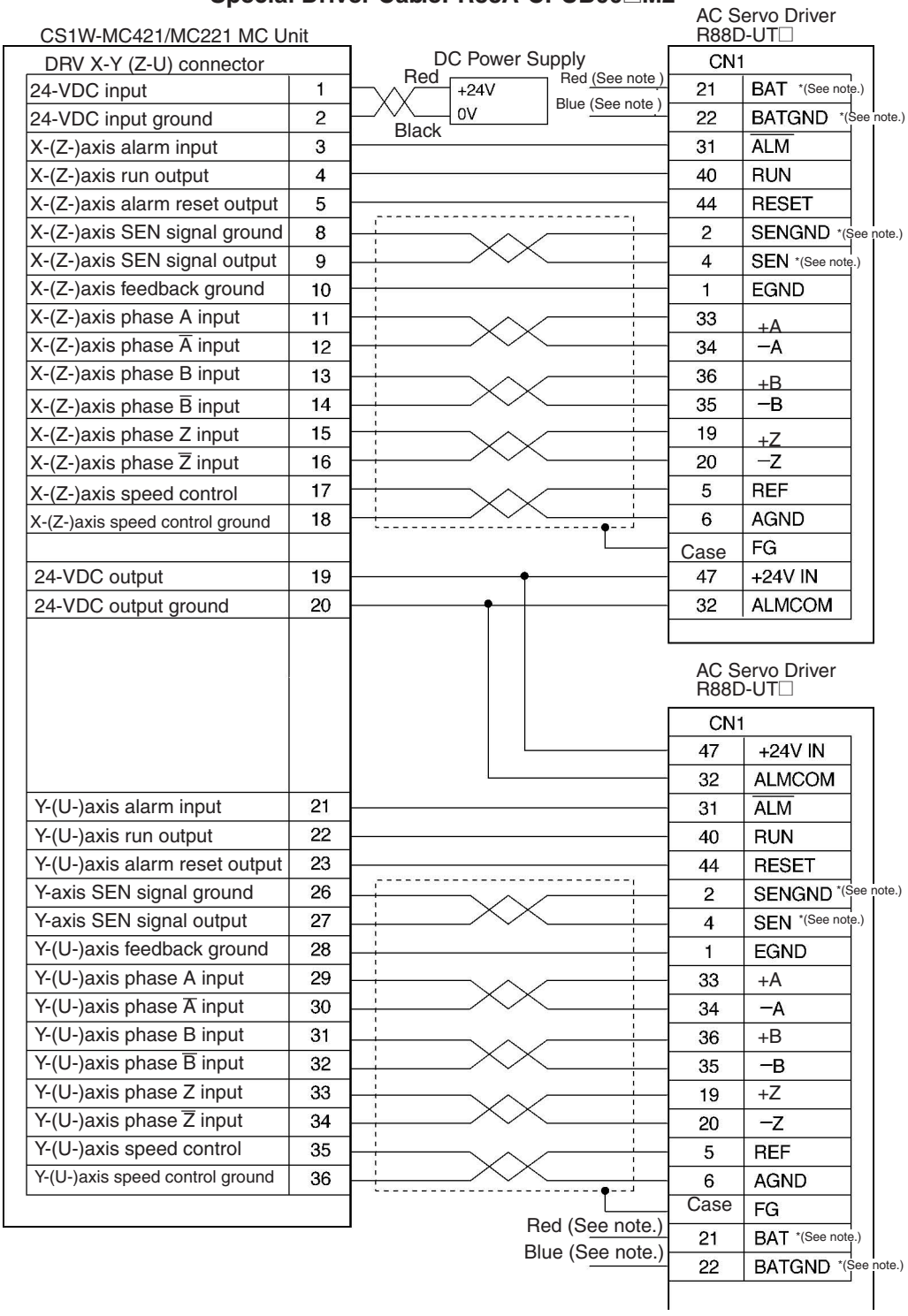

Note

1. Signals marked with asterisks are used with an absolute encoder. These signals will be connected even for an incremental encoder if the specified cable is used, but this will not interfere with operation. Do not connect these signals when wiring a custom cable for an incremental encoder.
2. Use only the wiring shown above for pins 19 and 20. If any other wiring is used, components in the Unit may fail.

Connection to W-series Models

Special Driver Cable: R88A-CPH00□M2

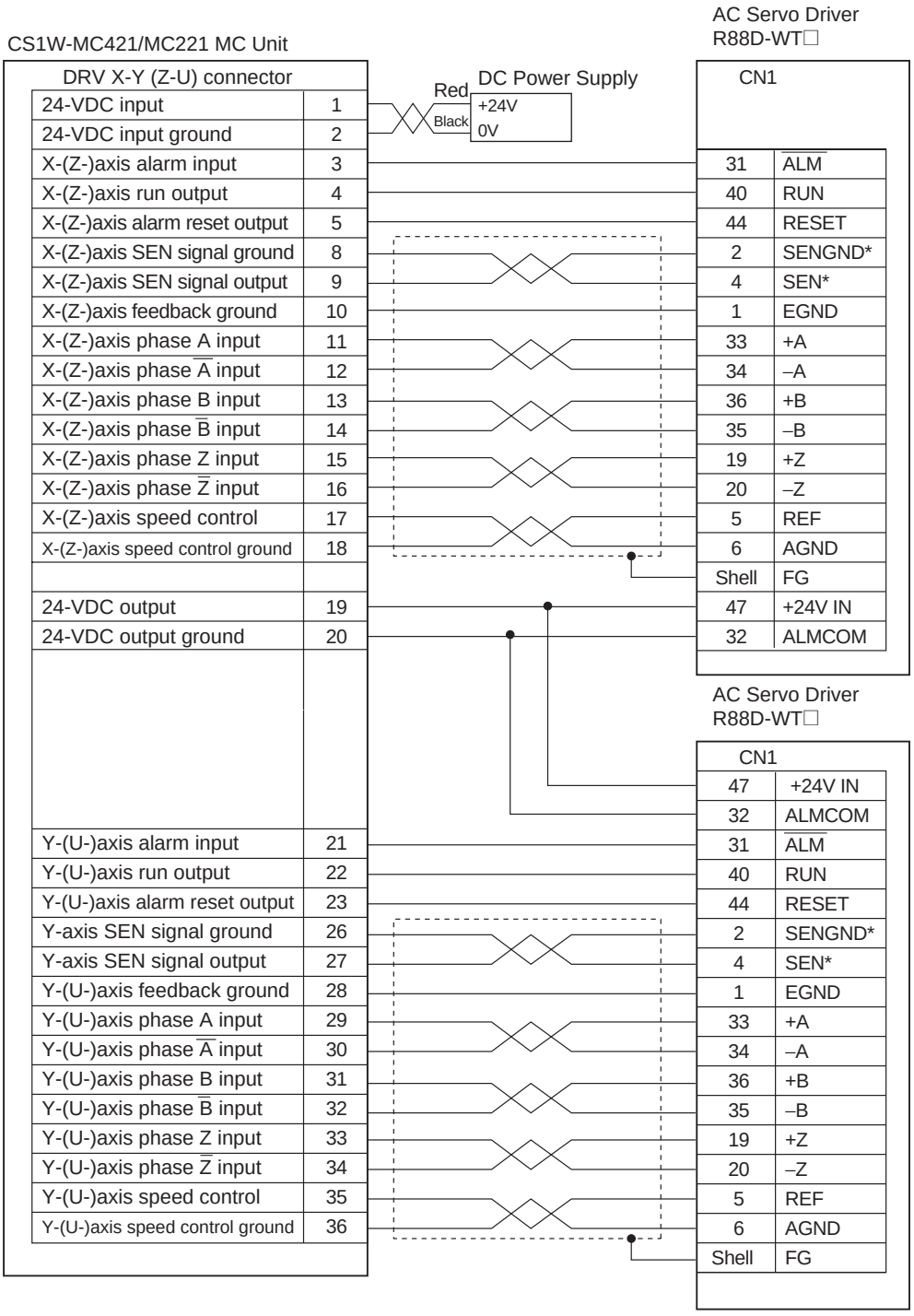

Note

1. Signals marked with asterisks are used with an absolute encoder. These signals will be connected even for an incremental encoder if the specified cable is used, but this will not interfere with operation. Do not connect these signals when wiring a custom cable for an incremental encoder.
2. Use only the wiring shown above for pins 19 and 20. If any other wiring is used, components in the Unit may fail.

Connection to H-series Models

Special Driver Cable: R88A-CPH00 M2

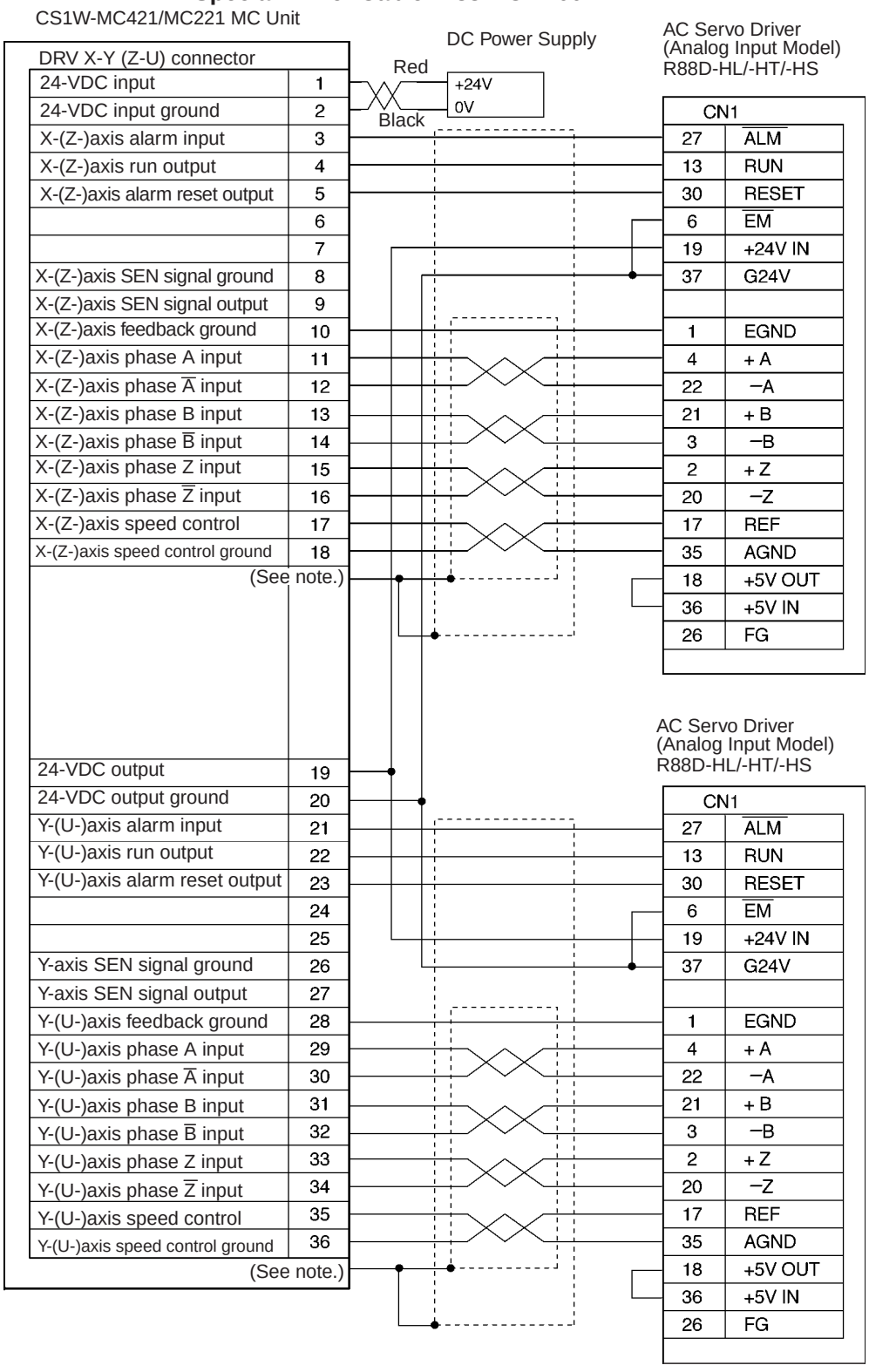

Note

1. Ground the shielded line to the connector bracket on the MC Unit side.
2. Use only the wiring shown above for pins 19 and 20. If any other wiring is used, components in the Unit may fail.

Connection to M-series Models

Special Driver Cable: R88A-CPM00 M2

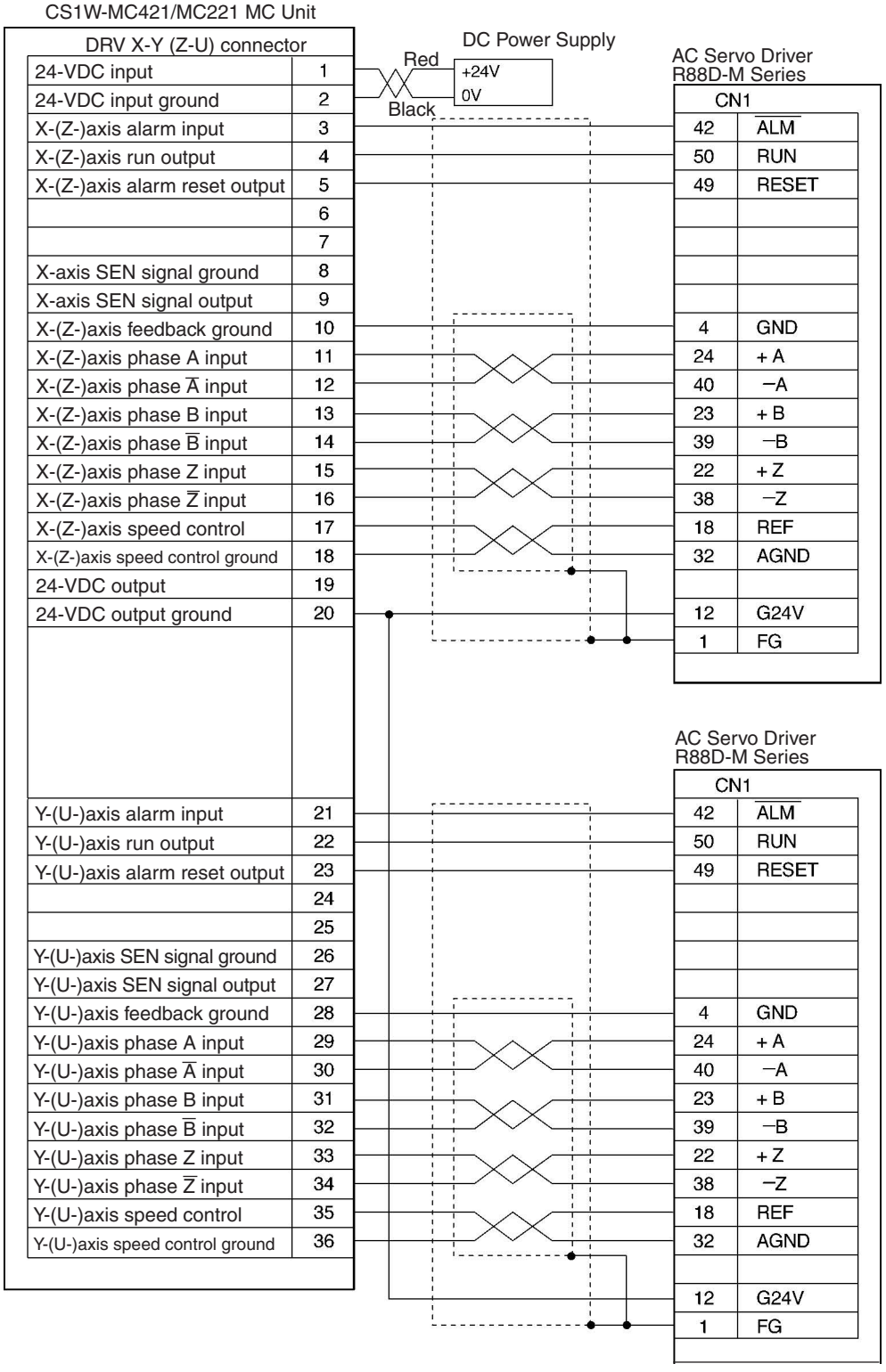

Note Use only the wiring shown above for pin 20. If any other wiring is used, components in the Unit may fail.

2-3-6 MPG Wiring

The MPG connector is used to connect a manual pulse generator (MPG). With the CS1W-MC421, it is wired with an MPG connector. With the CS1W-MC421, there is an MPG terminal at the I/O connector.

Recommended MPG

Use a line driver model for the MPG. The LGF-003-100 (by Sumtak) is recommended.

Snap-on Connectors

Connector (1): 10114-3000PE (Sumitomo 3M)
Case (1): 10314-52F0-008 (Sumitomo 3M)

MPG Connector Pin Arrangement

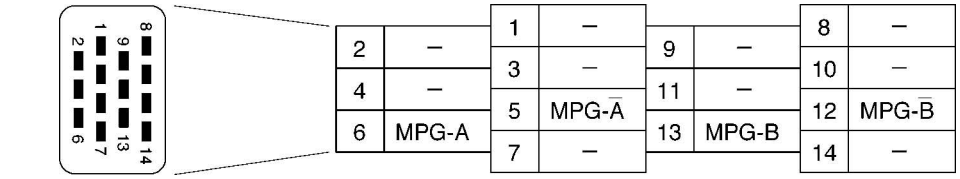

Connector pin arrangement

Pin number 1-4, 7-11, and 14 are not used.

MPG Connector Pin Names for CS1W-MC421

Pin No.	Symbol	Name
5	MPG-$\overline{A}$	MPG input phase $\overline{A}$
6	MPG-A	MPG input phase A
12	MPG-$\overline{B}$	MPG input phase $\overline{B}$
13	MPG-B	MPG input phase B

CS1W-MC421 Connection Example

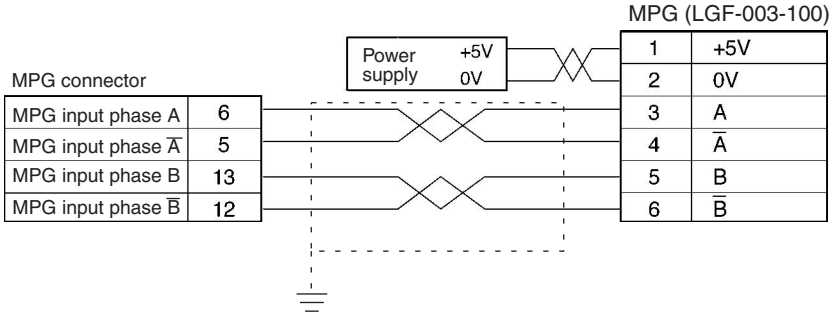

CS1W-MC221 Connection Example

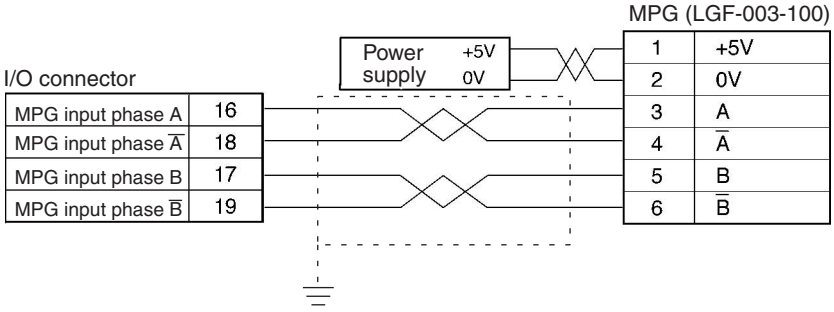

Using the Terminal Block

To connect the MPG to the CS1W-MC221, use the XW2B-40J6-7 Terminal Block (i.e., the Terminal Block for the CS1W-MC421). When the XW2B-40J6-7 is used, different signal names and terminals used for the MPG signals. Wiring according to the following table.

Connector pin number	Connector MPG signal name	Terminal Block terminal number	Terminal Block signal name
16	MPG-A	36	UCWL
17	MPG-B	32	ZCCWL
18	MPG-A	37	UCCWL
19	MPG-B	34	ZSTOP

2-3-7 Interface Circuits

The following tables provide specifications and circuit diagrams for the interface circuits for the I/O and DRV connectors.

I/O and DRV Connector Circuits

The circuit in the table below is used to interface the following inputs.

NC inputs: CWL (X to U), CCWL (X to U), STOP (X to U), and ALM
NO inputs: IN (1 to 4)
NC or NO inputs: ORG (X to U)

Item	Specification	Circuit Configuration
Rated input voltage	24 VDC ± 10%	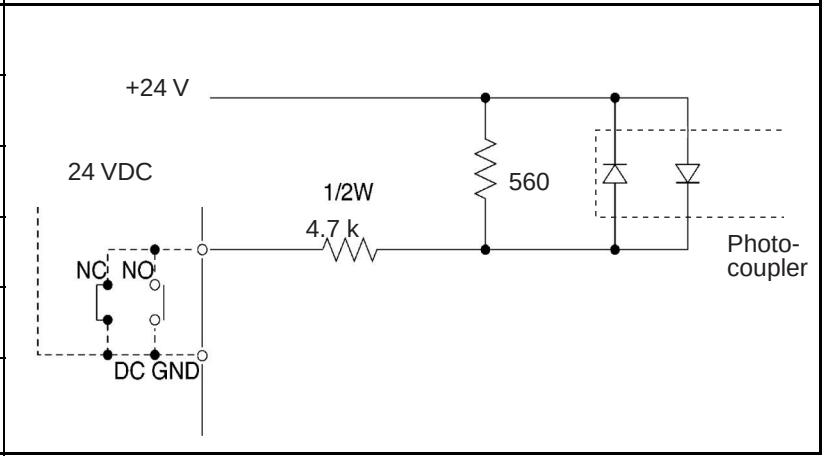
Rated input current	4.66 to 5.15 mA (24 VDC)	
ON voltage	17 V min.	
OFF voltage	5.0 V max.	
ON response time	1 ms max. (See note.)	
OFF response time	1 ms max.	

Note

1. IN 1 to 4: 0.1 ms max.
2. The MC Unit's input circuits (CWL (X to U), CCWL (X to U), and ORG (X to U)) are high-speed response circuits. Take the chattering time (bounce time) of input signals into consideration.

The circuit in the table below is used to interface outputs 1 to 4.

Item	Specification	Circuit Configuration
Max. switching capacity	50 mA/24 VDC	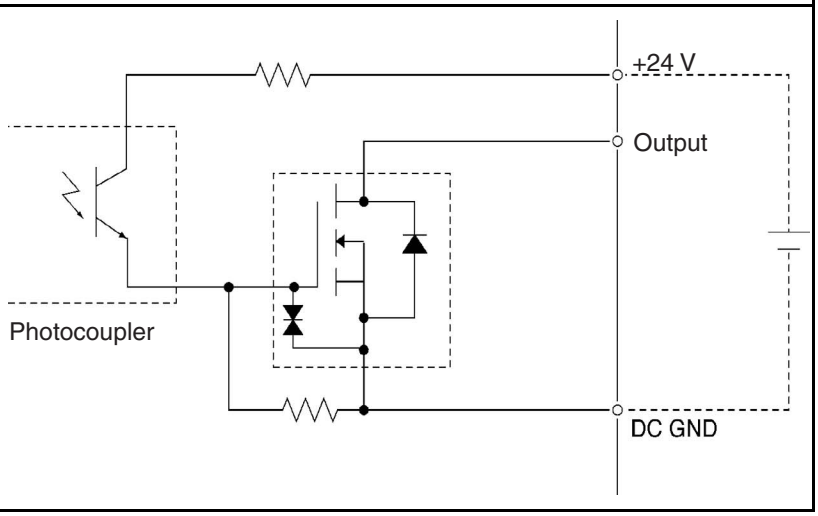
Leakage current	0.1 mA max.	
Residual voltage	1.0 V max.	
External supply voltage	24 VDC ± 10%	

The circuit in the following table is used to interface RUN (X to U) and ALMRS (X to U).

Item	Specification	Circuit Configuration
Max. switching capacity	10 mA/24 VDC	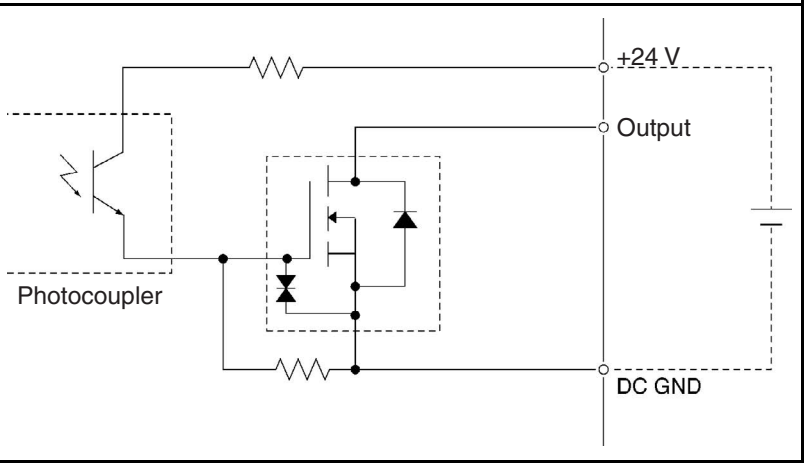
Leakage current	0.1 mA max.	
Residual voltage	1.0 V max.	
External supply voltage	24 VDC ± 10%	

The circuit in the table below is used to interface outputs SOUT (X to U).

Circuit Configuration
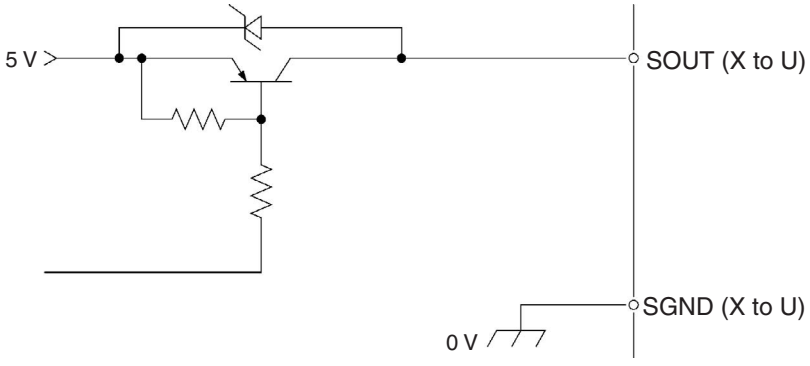

The circuit in the table below is used to interface phase inputs A, $\overline{A}$, B, $\overline{B}$, Z, and $\overline{Z}$ (for X to U) and MPG-A, MPG-$\overline{A}$, MPG-B, and MPG-$\overline{B}$.

Item	Specification	Circuit Configuration
Signal level	EIA RS-422-A Standards	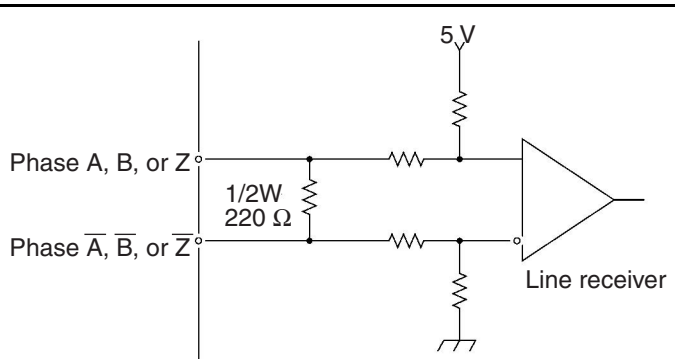
Input impedance	220 Ω	
Response frequency	500 kp/s max.	

The circuit in the table below is used to interface outputs OUT (X to U).

Item	Specification	Circuit Configuration
Output voltage	0 to ± 10 V	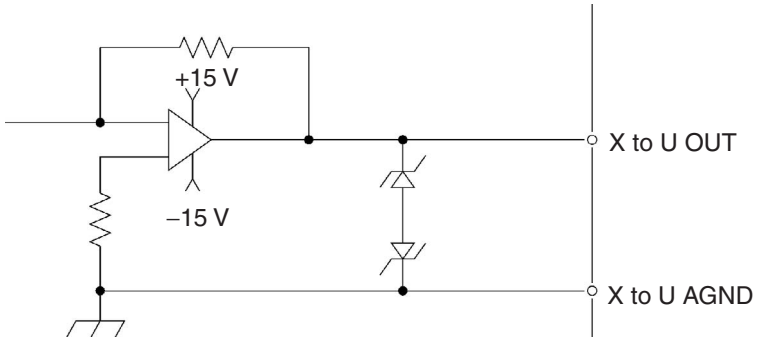
Load impedance	10 kΩ min.	

2-3-8 Wiring Precautions

Heed the following precautions when wiring the MC Unit to the servo drivers and motors.

Electronically controlled equipment may malfunction because of noise generated by power supply lines or external loads. Such malfunctions are difficult to reproduce; hence, determining the cause often requires a great deal of time. The following tips should aid in avoiding noise malfunction and improving system reliability.

Use electrical wires or cables of 0.2 mm^2 or as specified in the instruction manual for the servo driver.

Use larger size cables for the FG lines of the PLC or the driver and ground them over the shortest possible distance.

Separate power cables (AC power supply lines and motor power supply lines) from control cables (pulse output lines and external input signal lines). Do not group the two types of cable together or place them in the same conduit. Use shielded cables for control lines.

For inductive loads such as relays or solenoid valves, connect surge absorbers.

DC Relay

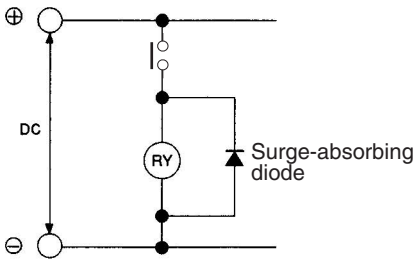

AC Relay

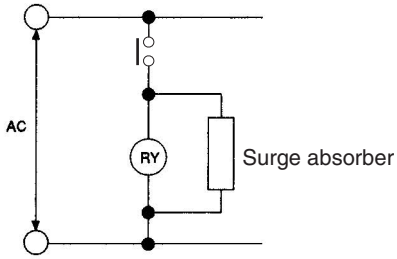

Solenoid

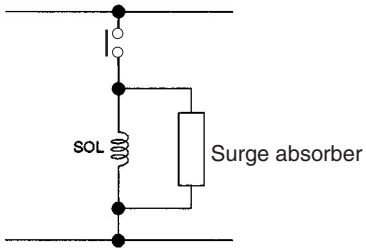

Note Connect a surge-absorbing diode or surge absorber close to the relay. Use a surge-absorbing diode with a voltage tolerance at least five times greater than the circuit voltage.

Noise may be generated on the power supply line if the same power supply line is used for an electric welder or electrical discharge unit. Provide an insulating transformer and a line filter in the power supply section to remove such noise.

It is recommended that twisted-pair cables be used for power supply lines. Use adequate grounds (i.e., to 100 Ω or less) with a wire cross section of 2 mm^2 or greater.

Use twisted-pair shielded cables for control voltage output signals, MPG signals, sync encoder signals, and feedback input signals.

For the control voltage output signals, wire a maximum of 2 m between the MC Unit and the servo driver.

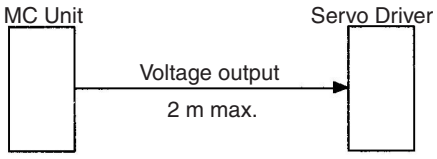

Wire the distance between the MC Unit and the feedback pulse generator (i.e., encoder or the servo driver) with a maximum length of 2 m.

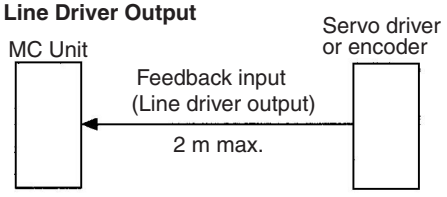

Note The input terminals that operate the 24-V system are isolated with photocouplers to reduce external noise effects on the control system. Avoid connec-

tions between the analog control voltage ground (AG) and the 24-V system ground (DC GND).

2-3-9 Motor Runaway

In a servo system employing a Servomotor, faulty or disconnected wiring may cause the servomotor to run out of control. Therefore, careful attention must be paid to preventing faulty or disconnected wiring. Also implement the measures explained in *2-4 Failsafe Circuits* for preventing motor runaway due to such problems.

When the wiring is correct, the servomotor maintains the stopped position through corrective operations as long as a position loop is formed and servolock is in effect.

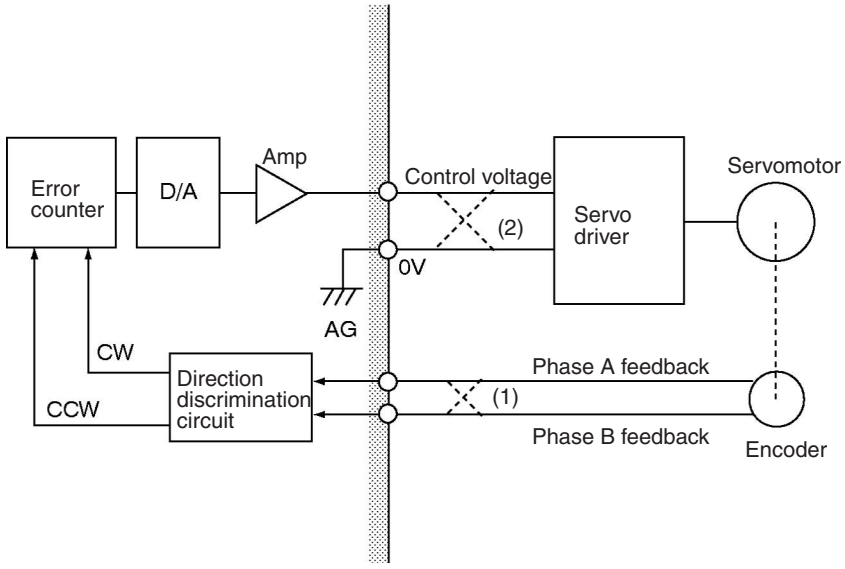

If the motor rotates in the CW direction due to a factor such as temperature drift, it is detected by the encoder and the internal error counter of the Motion Control Unit is notified of the direction and amount of rotation by means of feedback signals given by the encoder.

The count of the error counter is ordinarily zero unless otherwise designated. When the motor moves in the CW direction, the feedback signal transfers the direction and travel distance as a count to the error counter. Then the Motion Control Unit outputs a control voltage to rotate the motor in the CCW direction so as to zero this count figure.

The control voltage is output to the servo driver, and the motor rotates in the CCW direction. Again, when the motor rotates in this CCW direction, the encoder detects the direction and travel distance and notifies the error counter in the Motion Control Unit with feedback signals to subtract and zero the count figure.

This position loop subtracts the count in the error counter to maintain it at zero.

Runaway Due to Faulty Wiring

If the phase-A and phase-B feedback input lines are wired in reverse (crossed dotted lines at 1 in the figure), the servolock will not be effective and the motor will run out of control.

1,2,3...

1. If the motor rotates in the CW direction due to drift or some other cause, the encoder detects the direction and travel distance and transmits feedback signals to the error counter in the Motion Control Unit.

2. If the phase A and phase B feedback input lines are wired in reverse, the error counter receives the information as a rotation in the CCW direction.
3. As a result, the error counter having a count in the CCW direction attempts to zero the count by outputting a control voltage to the motor driver in the CW direction.
4. The servomotor rotates in the CW direction, repeating the above steps *1.* to *3.* Eventually, the motor runs out of control.

Runaway can occur not only from reversed wiring of phases A and B of the feedback inputs, but also from reversed wiring of the speed control voltage and the ground lines (crossed dotted lines at 2 in the figure above).

Runaway Due to Disconnected Wiring

The servomotor runs out of control not only when the position loop is not correctly formed but also when the position loop is not interrupted due to disconnected wiring.

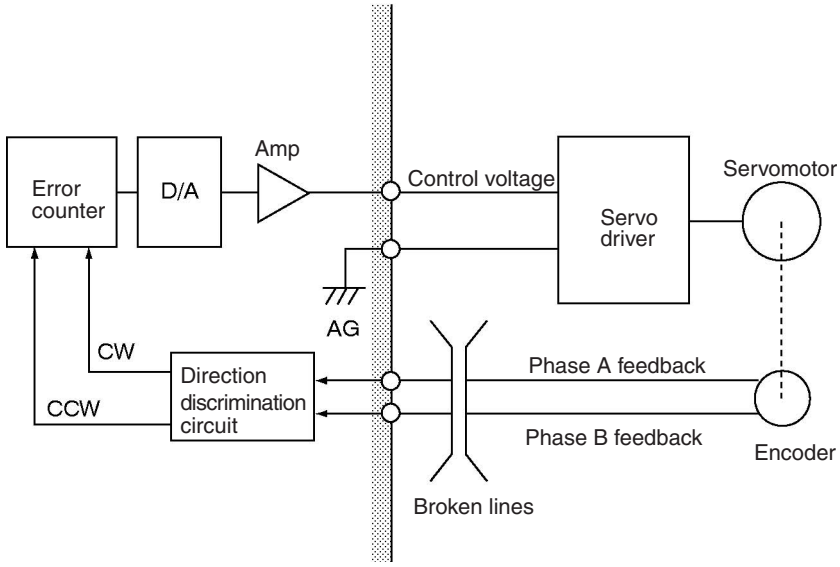

1,2,3...

1. Wire breakage while the servomotor is rotating:
   While the servomotor is rotating, the speed control voltage is not 0 V because of the signal from the error counter. If the feedback line is broken, no feedback signals will be given to the error counter and the speed control voltage remains unchanged from the value existed before the line breakage, causing motor runaway.
2. Wire breakage while the motor is stopped:
   If the feedback line is broken while the servomotor is stopped and correct feedback signals cannot be returned, the speed control voltage remains at zero without changing. Therefore, the servomotor also remains stopped. In fact, however, the motor may move in one direction without stopping.

This is caused by a discrepancy between the 0 V of the MC Unit's control voltage and the 0 V of the servo driver's voltage input.

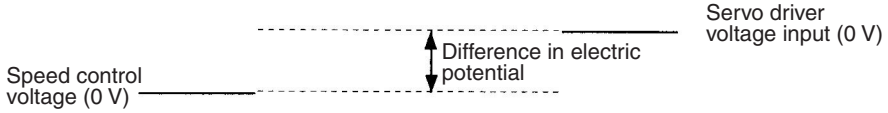

When the two 0 voltages do not match, an electric potential difference is generated, resulting in a false control voltage. This in turn causes the servomotor to move in one direction without stopping.

In order to prevent this, repair the wiring or adjust the 0 V of either the MC Unit or the servo driver so that the 0 V levels match, and, to be on the safe side, implement fail-safe measures in the system.

2-3-10 Wiring Check Function

The MC Unit is provided with a wiring check function. This function is designed to check for reverse wiring and disconnected wiring when the power supply switch is turned on in order to prevent motor runaway. Whether or not to a execute wiring check can be determined by setting a system parameter.

For details on troubleshooting when performing the wiring check, refer to *Section 2-5 Wiring Check Troubleshooting*.

This function is designed to output a specified number of pulses in the specified direction and to check whether correct feedback pulses are read.

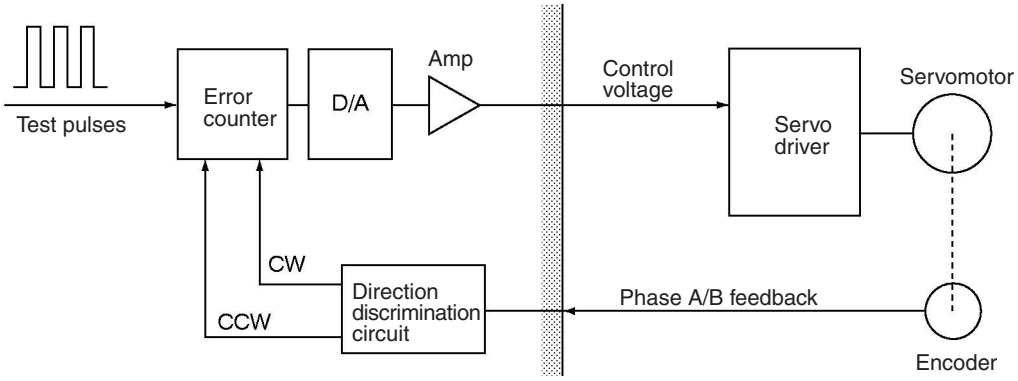

Set a specified number of test pulses in the error counter. After a set period of time (the time required for the system parameter to perform wiring check), check the content of the error counter to determine whether the number of pulses that were initially set and also the direction are correctly returned.

When the test pulses are set in the CW direction, the feedback pulses corresponding to the set number of pulses will be returned in the CW direction. If the direction is reversed, it is treated as a reverse wiring error and the servolock is cleared, dropping the voltage output to 0 V.

To correct this faulty wiring, either turn OFF the power and repair the reversed wiring or change the machine parameter “encoder polarity” from the preset setting to the opposite setting, i.e., change from “forward rotation for encoder increase” to “reverse rotation for encoder increase” or from “reverse rotation for encoder increase” to “forward rotation for encoder increase.”

In addition to the descriptions on the previous page, if the feedback pulses returned is less than the number of test pulses, a disconnected wiring error will be generated. Just as with a faulty wiring error, the servolock will be cleared and the voltage output will drop to 0 V.

To correct a disconnected wiring, turn OFF the power and repair the wiring.

Disconnected wiring errors can also be generated from errors other than wiring errors, such as failure of internal MC Unit components, servo driver errors, and so on.

Faulty wiring checks and disconnected wiring checks can be carried out simultaneously. Both checks can be skipped by setting the machine parameter “wiring check” from the MC Support Software to NO. It is initially set to YES.

The settings for specifying whether a wiring check will be performed, determining the wiring check time, and specifying the number of pulses, are all

made in the machine parameters. For details, refer to *SECTION 3 MC Unit Internal Data Configuration* or the *CX-Motion Online Help*.

2-4 Failsafe Circuits

To protect against unforeseen problems that may occur during operation, provide failsafe circuits, as those shown below, in the positioning system in which the MC Unit is used.

Errors during Positioning

As illustrated below, motor runaway may occur during operation without a position loop being formed for these reasons:

- Failure of command system
- Failure of feedback system

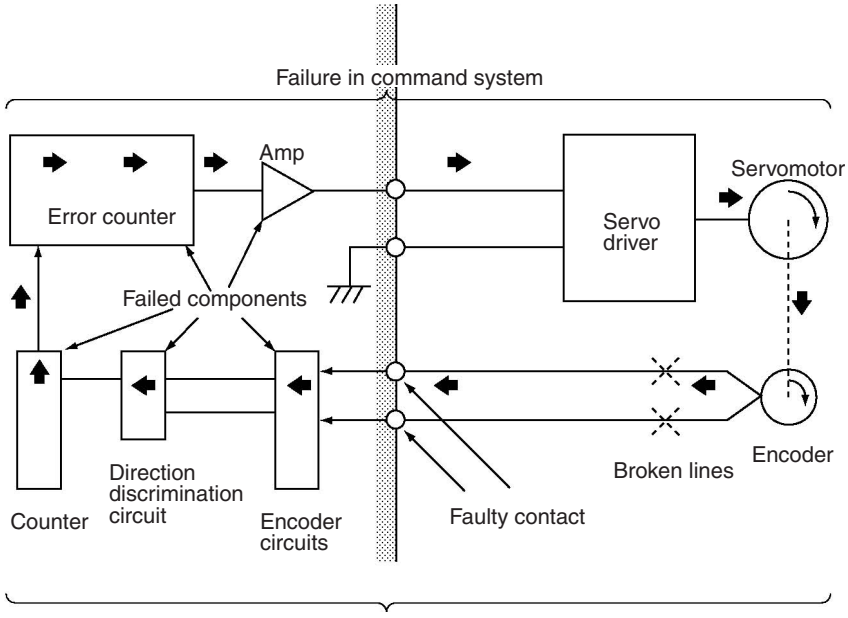

2-4-1 Failsafe Principles

The MC Unit handles failsafe measures as described in the following table. Applications examples are provided in the following sections.

Item	Failure in the command system	Failure in the feedback system
Outline	Movements are not performed at the command speed or in the desired direction.	Movement occurs for stop commands or movement is not performed in the desired direction.
Location of failure	Digital-to-analog circuits or analog power circuits in the MC Unit. Analog-to-digital circuits in Servo Drive, wiring of command systems, etc.	Motor encoder, encoder cable, Servo Drive encoder circuit, MC Unit encoder circuit.
Failsafe measures	Installing sensors in dangerous locations to stop the mechanical system by turning OFF the Servo Drive main circuits.	
Remarks	Machine movements can be determined from the amount of movement in the encoder, which in turn can be determined by the value of the error counter. The following measures can thus be taken. Creating a system that will stop the motor for the error counter warning function. Creating a system that will stop the motor for the error counter overflow function. If the command from the MC Unit is within a range determined to be, zones can be set and used to sop the motor.	If the feedback system fails, it will not be possible to determine the position of the mechanical system, e.g., the amount of encoder movement will be 0 even though the machine is moving. Here, hardware measures, such as sensors to stop movement, are required.

2-4-2 Failures in the Command System

Stopping the Motor with an Error Counter Warning

Error Counter Warnings

The Error Counter Warning Flag will be turned ON to notify the CPU Unit if the number of pulses in the error counter exceeds the value set as the Error Counter Warning Value in the System Parameters. The Error Counter Warning Flag can be monitored in the ladder program to handle errors if they occur.

Use the following procedure to set the Error Counter Warning Value.

1,2,3...

1. Move the system in trial operation and check the number of pulses that accumulate in the error counter.
2. After confirming the maximum number of pulses in the error counter, set the Error Counter Warning Value in the System Parameters to between 10% and 20% higher than the maximum number.

Refer to *Error Counter Function Selection Bit* in *5-4-1 System Controls* for more information.

Failsafe Circuits

The example shown below shows handling an error occurring during positioning. The MC Unit checks the error counter, and the Error Counter Warning Flag in the PLC Interface Area is turned ON whenever the Error Counter Warning Value is exceeded. The CPU Unit uses an external output to activate a dynamic brake and stop motion when it detects that the Error Counter Warning Flag has turned ON.

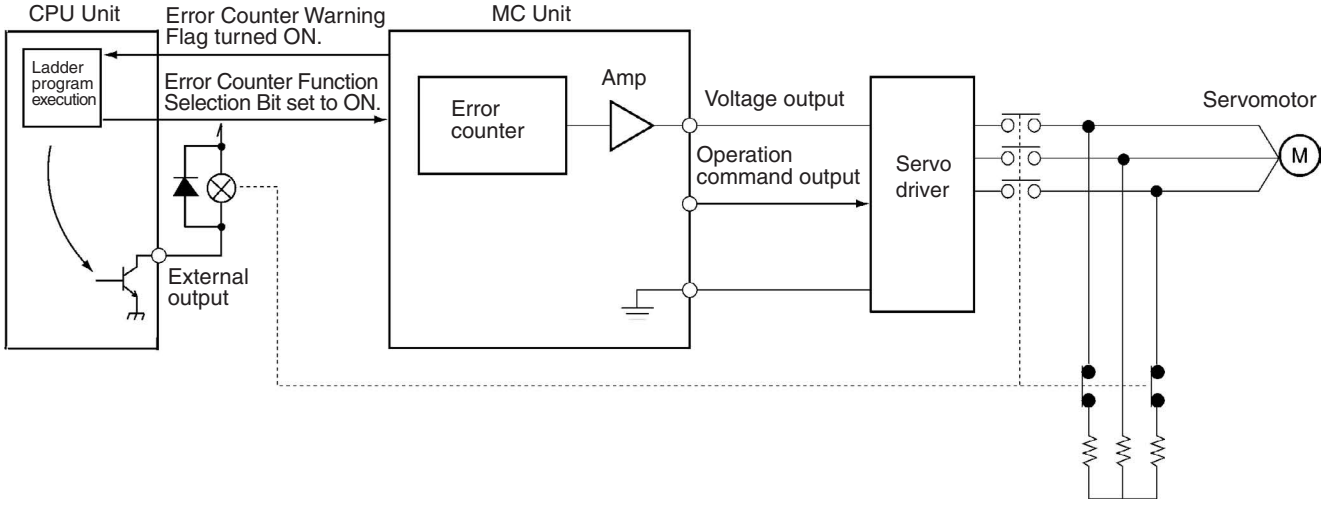

The example shown below also shows handling an error occurring during positioning. The MC Unit checks the error counter, and the Error Counter Warning Flag in the PLC Interface Area is turned ON whenever the Error Counter Warning Value is exceeded. The CPU Unit uses an external output to send an emergency stop input to the MC Unit when it detects that the Error Counter Warning Flag has turned ON.

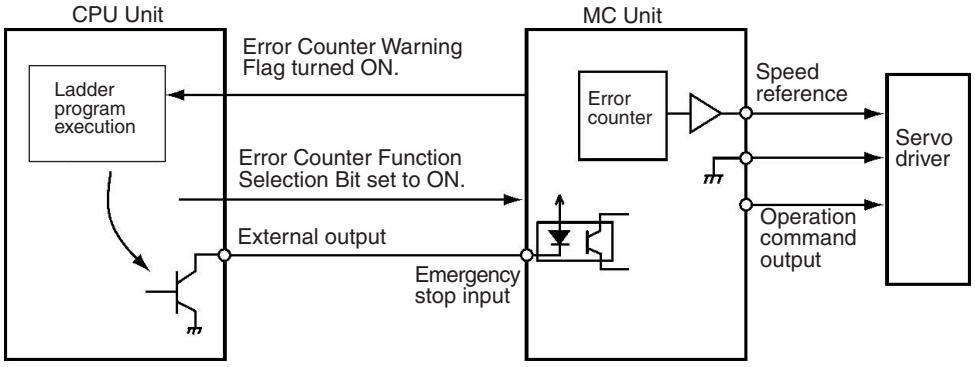

In either of the above examples, the motor makes a sudden stop when an error counter warning occurs. Make sure that this sudden stop will not result in damage to the system.

Stopping the Motor with an Error Counter Overflow

Error Counter Overflows

When the error counter overflows, a speed reference voltage of 0 V will be output to the Servo Driver for 0.5 s and then the operation command output to the Servo Driver will be turned OFF.

The value of the error counter at which an overflow occurs can be controlled using the Error Counter Function Selection Bit. The following settings are possible.

ON: An overflow will occur at 65,535.
When the Selection Bit is ON, the Error Counter Warning Flag can also be used.

OFF: An overflow will occur at the value set for the error counter warning. When the Selection Bit is ON, the Error Counter Warning Flag thus cannot be used.

Refer to *Error Counter Function Selection Bit* in *5-4-1 System Controls* for more information.

Failsafe Circuits

The example shown below shows handling an error occurring during positioning. The MC Unit checks the error counter, and the Error Counter Warning Flag in the PLC Interface Area is turned ON whenever the Error Counter Warning Value is exceeded.

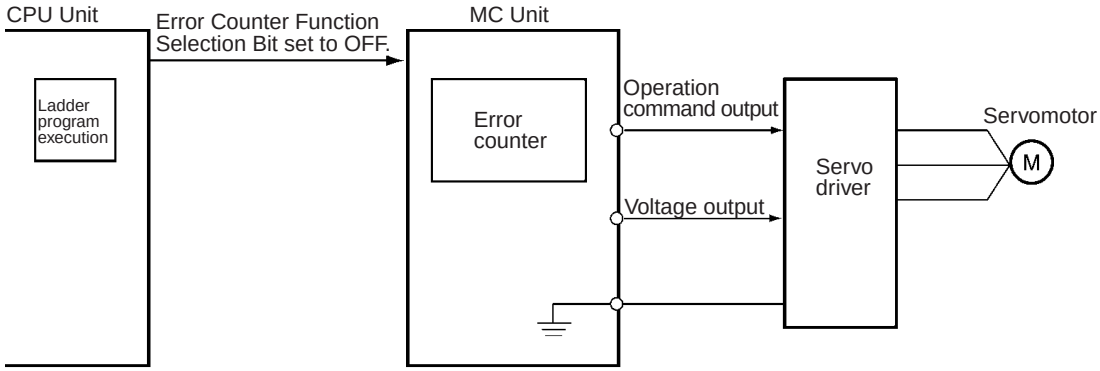

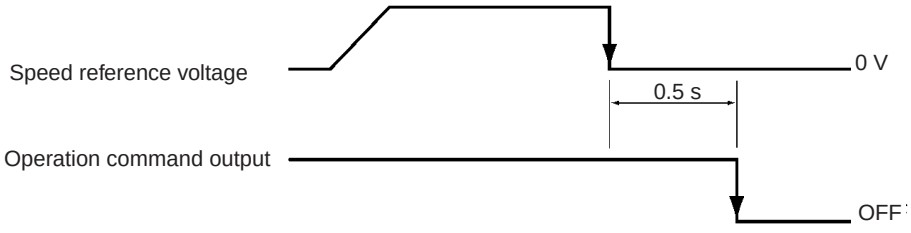

Stopping the Motor with Zones

Zones

Zones can be set in the Zone Parameters in the System Parameters so that a Zone Flag will be turned ON in the CPU Unit when the motor is within a zone. Refer to *Zone Parameters* on page 167 for details.

Failsafe Circuits

First, the zones are set in the System Parameters and then the ladder program is written to stop the motor when a Zone Flag turns ON. In the following example, the X-axis and Y-axis Zone Flags are monitored in the ladder diagram. If both flags are ON at the same time, the CPU Unit uses an external output to activate a dynamic brake and stop motion.

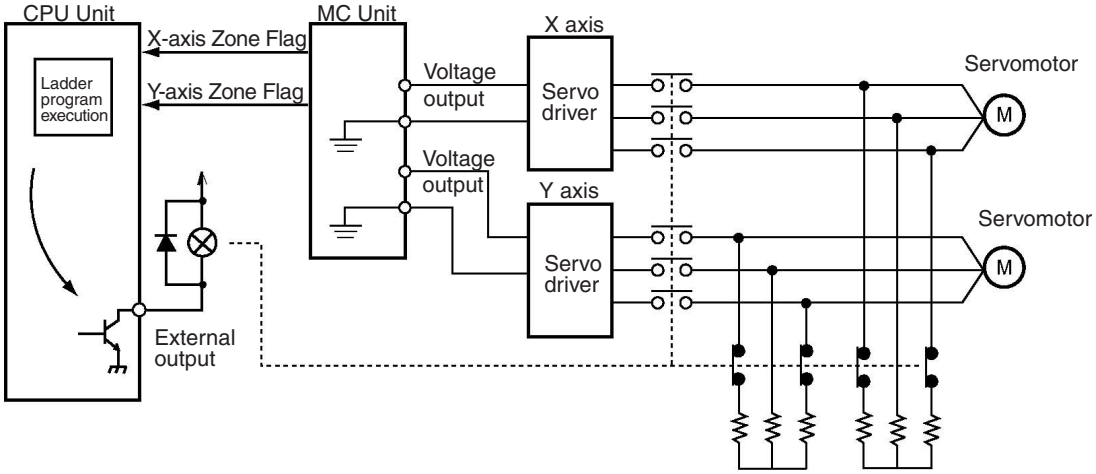

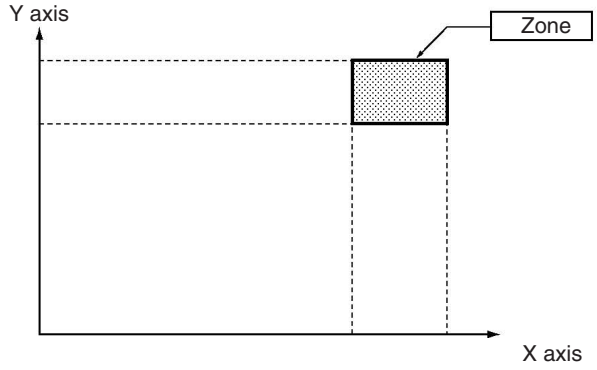

2-4-3 Failures in the Feedback System

Sensors can be mounted in dangerous areas to stop the machine by turned OFF the main circuits of the Servo Drivers. To be sure that the failsafe measure is dependable, sensors are mounted in areas where the machine must never enter. If a sensor is activated, a dynamic brake is applied to the Servo Drivers, the Servo Driver main circuits are turned OFF, other similar measures are taken.

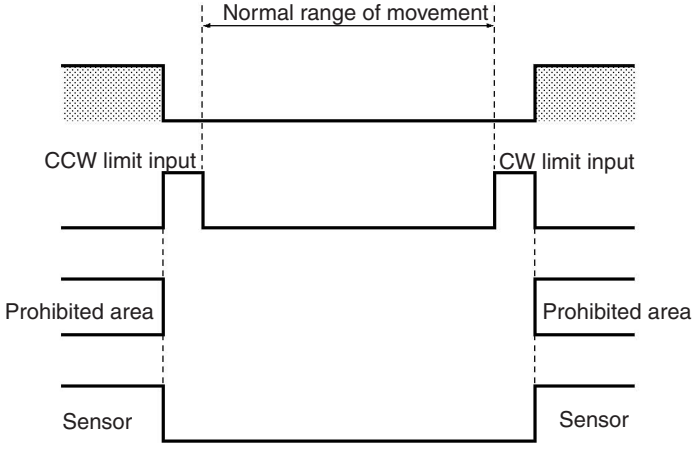

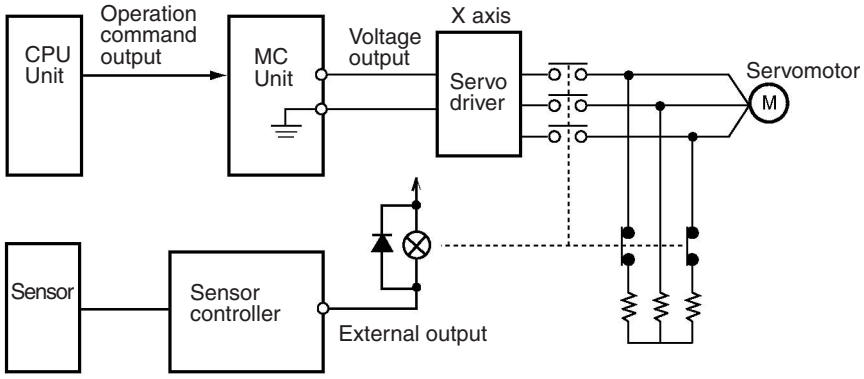

2-4-4 Other Safety Features

The following functions are also available to aid in implementing safety measures.

Wiring Check

A wiring check can be performed the first time a servo is locked after starting or restarting the MC Unit. Both the command system and feedback system wiring is checked. Refer to *2-3-10 Wiring Check Function* for details.

Software Limits

Clockwise and counterclockwise limits can be set in the software to prevent motion outside of a specific range. An error will occur and the axis will be decelerated to a stop if a software limit is exceeded. Refer to *Positive (+) and Negative (–) Software Limits* on page 178 for details.

Feedback Pulse Error Detection

An error will occur if the feedback pulse from the encoder exceeds 500 kpps. When this happens, a speed reference voltage of 0 V will be output to the Servo Driver for 0.5 s and then the operation command output to the Servo Driver will be turned OFF.

Input Limit Stop Function If a clockwise or counterclockwise limit sensor is activated, a speed reference voltage of 0 V will be output to the Servo Driver for 0.5 s and then the operation command output to the Servo Driver will be turned OFF. One of the System Parameters can also be set to stop using the pulses remaining in the error counter (with the servo still locked). Refer to *Emergency/Limit Input Stop Method* on page 176 for details.

Emergency Stop Function An emergency stop input is also provided in addition to the clockwise or counterclockwise limit sensors. If the emergency stop input is activated, a speed reference voltage of 0 V will be output to the Servo Driver for 0.5 s and then the operation command output to the Servo Driver will be turned OFF. One of the System Parameters can also be set to stop using the pulses remaining in the error counter (with the servo still locked). Refer to *Emergency/Limit Input Stop Method* on page 176 for details.

2-5 Wiring Check Troubleshooting

There are often cases where a wiring error other than faulty or disconnected wiring will be generated during the MC Unit wiring check. This section explains the causes of other such errors, and suggests countermeasures to deal with them.

2-5-1 Wiring Errors

The cable between the MC Unit and the servo driver must match the combined devices. Mistakes in the wiring may cause servomotor runaway. Moreover, contact problems and disconnections may occur over time even in systems that were originally wired correctly, and this may also cause servomotor runaway. In particular, wiring disconnections can easily occur in devices such as robots with movable parts where cables are frequently bent. The wiring check function helps to prevent servomotor runaway in these kinds of cases. Any errors that are discovered during the wiring check are called “wiring errors.”

2-5-2 Wiring Check Principles

During a wiring check a movement is executed for a given number of pulses, and it is checked whether a corresponding number of feedback pulses is returned within a given period of time. The number and direction of pulses are checked. If the feedback pulses are not returned before the specified period of time has elapsed, a wiring error is generated. A wiring error (reversed wiring error) will also be immediately generated if feedback pulses are returned in the opposite direction from the direction of movement during the monitoring period. Any Servomotor runaway that occurs during the check, caused by errors such as reversed wiring, will immediately generate a wiring error even if the specified time has not yet elapsed.

For details on the wiring check function, refer to *Section 2-3-10 Wiring Check Function*.

The settings determining whether or not the wiring check will be executed, the number of wiring check pulses, and the wiring check time, are all made in the MC Unit machine parameters using CX-Motion.

2-5-3 Wiring Error Cause and Countermeasures

As explained above, wiring errors can occur for reasons other than actual wiring problems. The following table list possible causes of such errors, and suggests countermeasures that can be taken.

⚠ **Caution** When a wiring error occurs, be sure to turn OFF the power supply before checking the wiring or setting the machine parameters.

Cause of error	Contents	Countermeasures
Wiring is faulty or disconnected.	Feedback pulses were not returned within the wiring check time period, so a wiring error was generated. The wiring check function is operating normally.	Check for faulty wiring or disconnections.
The wiring is reversed for feedback pulses or speed reference.	Feedback pulses were returned in the opposite direction from the specified direction of movement, so a wiring error was generated. The wiring check function is operating normally.	Correct the reversed wiring or change the machine parameter “encoder polarity” from the preset setting to the opposite setting, i.e., change from “forward rotation for encoder increase” to “reverse rotation for encoder increase” or from “reverse rotation for encoder increase” to “forward rotation for encoder increase.”
There is a speed reference offset. (The zero balance is distorted.)	The MC Unit’s 0 V command reference does not match that of the servo drive.	Connect the MC Unit to the servo driver, turn ON the power supply, and adjust the 0 V at the servo driver with servo-lock disabled. For U-, W-, and G-series Servo Drivers, execute an automatic offset adjustment. An automatic offset adjustment is an adjustment for reading the present input voltage as 0 V. Only U-, W-, and G-series Servo Drivers have this function.
There is weight or external force on an axis.	Even after the wiring check time has elapses, a wiring error (reverse wiring error) may be generated if weight or external force causes reverse movement.	• It is a bit difficult for a wiring check, but it is possible to set a speed reference offset that just corresponds to the weight or external force. • If reverse movement due to weight or external force cannot be avoided, as a temporary measure set the wiring check so that it will not be executed.
The machinery is too heavy.	Feedback pulses are not returned within the specified wiring check time because the machinery is too heavy.	• Set the number of wiring check pulses and the wiring check time to double their original values, and execute the check again. • Increase the gain so that the feedback pulses are returned within the wiring check time.
Some component in the MC Unit has failed.	• If there is a problem with the power supply circuitry or the analog circuitry in the MC Unit, the speed reference voltage will not be output correctly. • If there is a problem with the feedback circuitry, feedback pulses will not be returned.	If the error persists even after the above countermeasures have been tried, there may be a component failure in the MC Unit. Replace the MC Unit.

2-5-4 Checking for Wiring Errors

With an MC Unit and a U-series Servo Driver, the following procedures can be used to check whether or not there are any wiring errors.

Wiring or Parameter Check

1,2,3...

1. Remove the servomotor from the machinery, and set the MC Unit machine parameters so that the wiring check will not be performed.
2. Turn ON the power supply. If there is no servomotor runaway, the wiring and machine parameters will be correct. If there is runaway, check the wiring. If it is correct, change either the “rotation direction” or “encoder polarity” machine parameter.

Zero Balance Adjustment

When the above procedure eliminates servomotor runaway, perform a zero balance adjustment.

1,2,3...

1. Connect the servomotor to the machinery.
2. Set the MC Unit machine parameters so that the wiring check will be performed.
3. Turn ON the power supply (to the MC Unit and Servo Driver together). Do not use servo-lock.
4. Execute an automatic offset adjustment at the Servo Driver, with servo-unlock still in effect at the MC Unit. For details on executing an automatic offset adjustment, refer to the Servo Driver manual.
5. Adjust the gain at the Servo Driver. It is convenient to use autotuning. For details on Servo Driver autotuning, refer to the Servo Driver manual.
6. Adjust the gain at the MC Unit. If this is done by means of Servo Driver autotuning, read the Servo Driver’s position loop gain and use CX-Motion to set that value in the MC Unit’s servo parameter.
7. Execute servo-lock at the MC Unit, and check for any wiring errors.

⚠ **Caution** The Teaching Box can be used for monitoring the present position or outputting an analog voltage. In either case, be sure to take safety precautions such as removing the motor from the machinery. For detail on performing these operations, refer to the *Teaching Box Operation Manual* (W320).

2-6 Changing the Mechanical Direction of Operation

Either of the following operations can be performed to change the mechanical direction of operation after wiring has been completed:

- Change the wiring.
- Change the Servo Motor and MC Unit parameters.

The second method (changing the parameters) will be explained here.

As shown below, there are two parameters to be changed for the MC Unit, and one to be changed for OMRON U-series and M-series Servo Drivers.

MC Unit parameters: Rotation direction, encoder polarity
Servo Driver parameter: CCW direction

The following example illustrates how to combine these parameters.

Example

In this example it is assumed that the default settings are in effect for the machinery, and that positioning moves in the minus (–) direction with plus (+) position command values from the MC Unit.

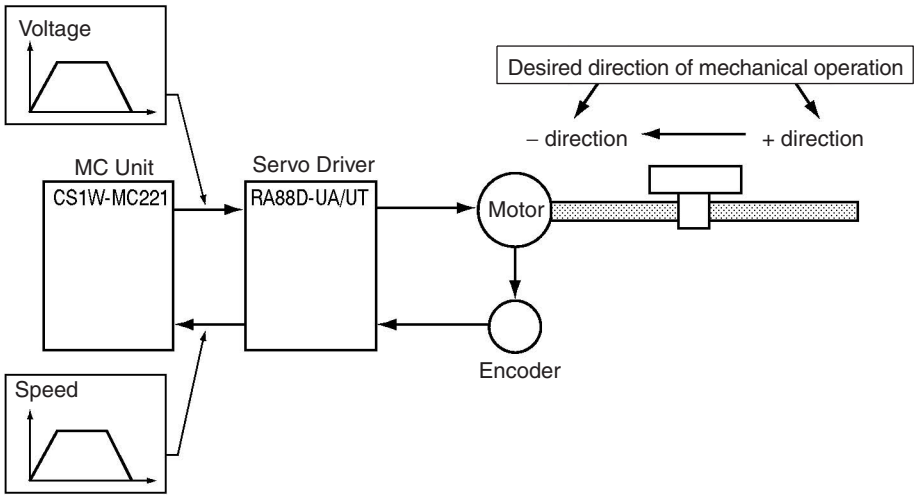

In this case, by setting the parameters according to setting method 3 or 4, positioning can be moved in the plus (+) direction by plus (+) position command values from the MC Unit. The ● marks in the following table indicate the set values.

Direction of operation		MC Unit (with parameters set by CX-Motion)				U-series Servo Driver setting	
		Direction of rotation		Encoder polarity		Cn-02 bit 0 = 0	Cn-02 bit 0 =1
		Forward with + voltage	Reverse with + voltage	Encoder increased by forward	Encoder increased by reverse	CCW direction: Forward	CCW direction: Reverse
Move in minus direction with plus command value	Setting method 1	● (Default setting)		● (Default setting)		● (Default setting)	
	Setting method 2		●		●		●
Move in plus direction with plus command value	Setting method 3		●		●	●	
	Setting method 4	●		●			●

When using an absolute encoder-type motor, use either setting method 1 or 3. If either of the other two setting methods is used, the present value cannot be correctly re-established following a power outage.

With a W-series Servo Driver, bit 0 of Cn-02 corresponds to digit number 0 of Pn000.

With a G-series Servo Driver, bit 0 of CN-02 corresponds to Pn51. (Set Pn46 to 0.)

2-7 Connecting Peripheral Devices

This section explains how to connect a personal computer, with CX-Motion installed, to the CPU Unit, and how to connect a Teaching Box.

2-7-1 Connecting a Personal Computer to the CPU Unit

Connect the computer to the CPU Unit's peripheral port or built-in RS-232C port. For details, refer to the *SYSMAC CS Series Programmable Controller Operation Manual* (W399).

Note It is also possible to connect the computer to the port for the Serial Communications Board/Unit if the port is set to Host Link Mode.

Connecting an IBM PC/AT or Compatible Computer

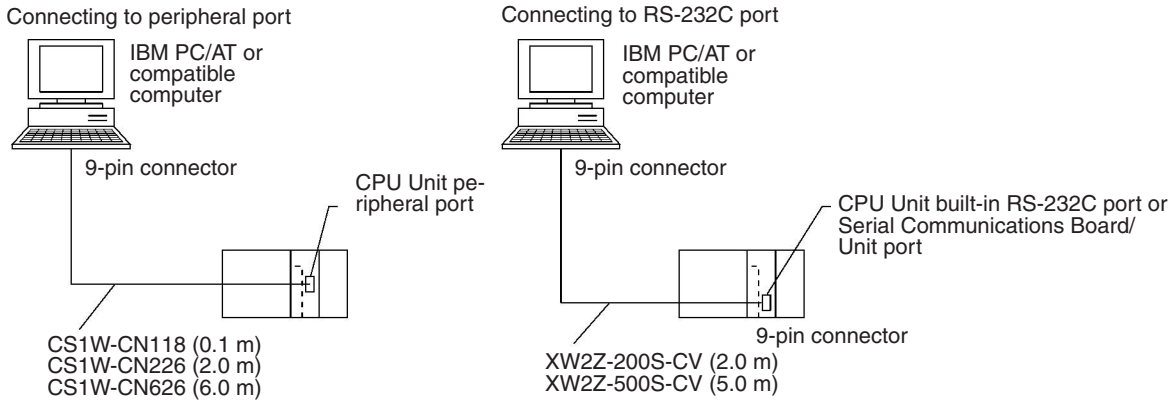

CX-Motion Connecting Cables (for IBM PC/AT or Compatible)

Unit	Port on Unit	Port on computer	Serial communications mode (network)	Model numbers	Length	Remarks
CPU Unit	Peripheral	9-pin D-sub male	Peripheral bus or Host Link	CS1W-CN226	2.0 m	---
				CS1W-CN626	6.0 m	
	RS-232C (9-pin D-sub female)			XW2Z-200S-CV	2.0 m	ESD (static electricity)-resistant connectors used.
				XW2Z-500S-CV	5.0 m	
Serial Communications Board/ Unit	RS-232C (9-pin D-sub female)		Host Link	XW2Z-200S-CV	2.0 m	
				XW2Z-500S-CV	5.0 m	

⚠ **Caution** Before connecting to an RS-232C port, touch a grounded metal object to discharge static electricity from your body. (Although the XW2Z-□00S-CV cables are equipped with static-resistant connector hoods (XM2S-0911-E), you must still discharge static electricity before touching the connectors.)

The following cables can be used to connect an RS-232C cable to the peripheral port.

Unit	Port on Unit	Port on computer	Serial communications mode (network)	Model numbers	Length	Remarks
CPU Unit	Peripheral port	9-pin D-sub male	Peripheral bus or Host Link	CS1W-CN118 + XW2Z-200S-CV or XW2Z-500S-CV	0.1 m + (2 or 5 m)	ESD (static electricity)-resistant connectors used for XW2Z-□00S-CV.
			Host Link	CS1W-CN118 + XW2Z-200S-C or XW2Z-500S-C		---

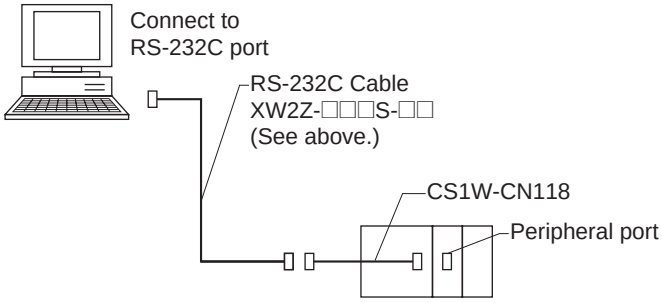

The following cables can be used to connect the previous CQM1-01/02 cables to the peripheral port.

Unit	Port on Unit	Port on computer	Serial communications mode (network)	Model numbers	Length	Remarks
CPU Unit	Peripheral port	9-pin D-sub male	Host Link	CS1W-CN114 + CQM1-CIF02		---

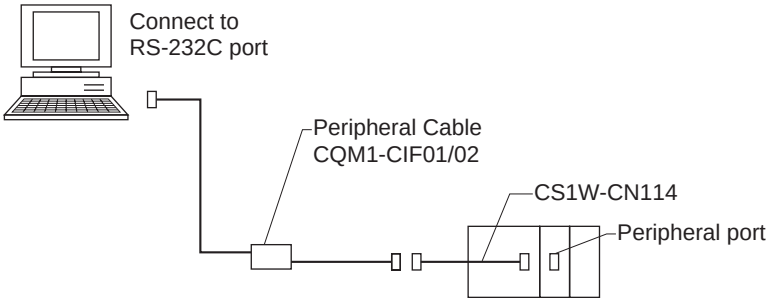

The following cables can be used to connect an RS-232C cable to the computer.

Unit	Port on Unit	Port on computer	Serial communications mode (network)	Model numbers	Length	Remarks
CPU Unit	RS-232C (9-pin D-sub female)	9-pin D-sub male	Host Link	XW2Z-200S-V	2 m	---
				XW2Z-500S-V	5 m	
Serial Communications Board/Unit	RS-232C (9-pin D-sub female)		Host Link	XW2Z-200S-V	2 m	
				XW2Z-500S-V	5 m	

2-7-2 Connecting the Teaching Box

Connecting Cables

Use the Connecting Cables listed below (separately sold) to connect the Teaching Box to the MC Unit.

Model	Cable length
CV500-CN224	2 m
CV500-CN424	4 m
CV500-CN624	6 m

Connection Procedure

Use the following procedure to connect the Teaching Box to the MC Unit.

1,2,3... 1. Remove the connector cover.

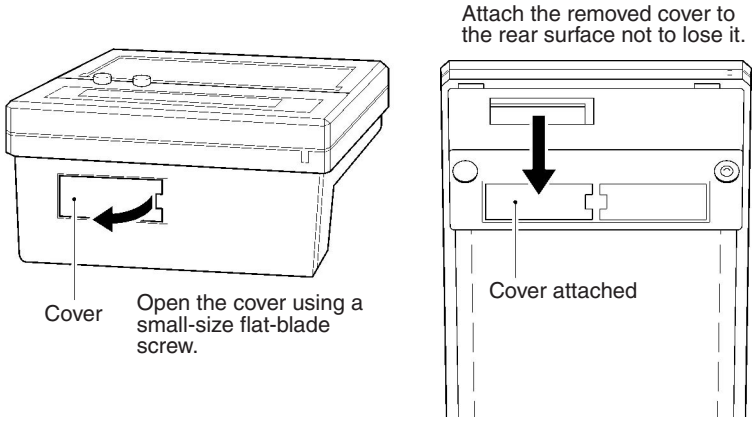

2. Plug the Connecting Cable into the connector.

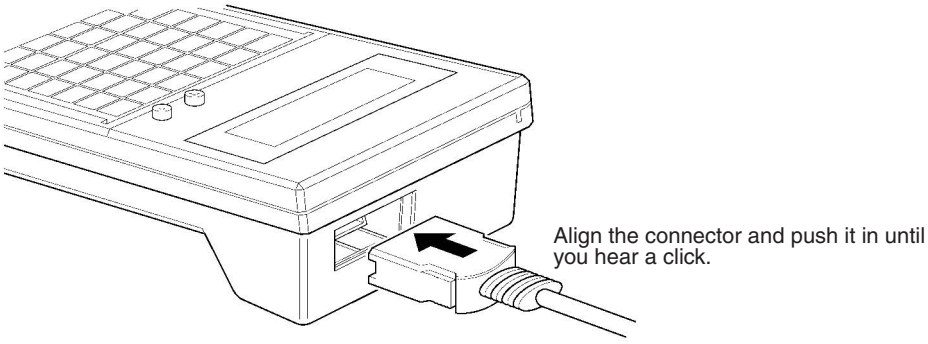

3. Plug the Connecting Cable into the MC Unit connector marked “T.B.”

Removing the Cable

Using your fingers, press in and hold the clamps on both sides of the connector and pull out the connector.

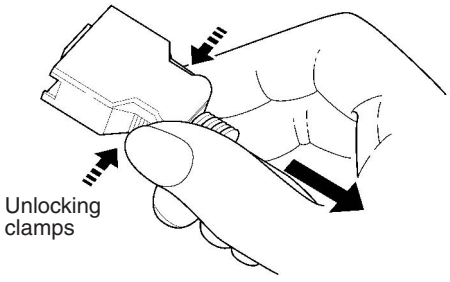

SECTION 3
MC Unit Internal Data Configuration

This section describes the data contained within the MC Unit.

3-1 Data Configuration 148
3-2 Determining the Task Configuration 149
3-2-1 Task Configuration 149
3-3 System Parameters 151
3-3-1 System Parameters 151
3-3-2 Description of System Parameters 152
3-3-3 System Parameter Addresses 155
3-3-4 Data Configuration for System Parameters 156
3-3-5 Timing that Validates Transferred System Parameters 170
3-3-6 System Parameters 171
3-4 Position Data 187
3-4-1 Position Data Addresses 188
3-4-2 Position Data Configuration 188
3-5 Monitor Data 189
3-5-1 Monitor Data Addresses 189
3-5-2 Monitor Data Configuration 191
3-6 Command Area 196
3-6-1 Command Area Addresses 197
3-6-2 Command Area Data Configuration 197

3-1 Data Configuration

The MC Unit handles the following types of data.

1,2,3...

1. System parameters
   - Unit parameters
   - Memory management parameters
   - Axis parameters
2. Position data
3. Monitor data
4. Command area data

Note Programs written in G language aren't treated as data.

Data	Function	MC Unit internal memory address
System parameters	System parameters are comprised of unit parameters, memory management parameters, and axis parameters that contain system information used in the MC Unit, such as the number of axes used, number of tasks, feed rates, and operating ranges.	4000 to 4684
Position data	There are 2,000 addresses that indicate positions. In G language, these are identified as A0000 through A1999.	0000 to 1999
Monitor data	Monitor data is read-only data consisting of various types of MC Unit data. such as I/O monitor data that indicates the status of I/O signals as well as status, tasks, and axes error codes generated in the MC Unit.	6000 to 6081
Command area	The command area is used to transfer position data, write system parameters to flash memory, execute automatic loading, and perform other functions by writing special command data using the IOWR instruction.	6100 to 6120 (See note.)

Note The override function selection (6120) can be used only with Unit Ver. 1.15 or later, and with Units whose model number ends in -V1.

Data Transfer Methods

The following methods are used to transfer the preceding data between MC Units, to read monitor data, and to execute all functions in the command area. Refer to the *CX-Motion Online Help* and also refer to *SECTION 4 Data Transfer and Storage* for more details.

- Use CX-Motion.
- Execute IOWR/IORD instructions (INTELLIGENT I/O READ and INTELLIGENT I/O WRITE instructions) from a ladder program.
- Execute IOWR instructions from a ladder program and write position data that has been specified for transfer to the command area (addresses 6102/6103).

Specify the internal memory addresses of the MC Unit in hexadecimal to identify data when IOWR/IORD instructions are executed from a ladder program. Refer to *Section 3-2 Determining the Task Configuration* for details.

Basic Data Concepts

System Parameters

Transfer system parameters created on the CX-Motion to the MC Unit (IOWR instructions can be used to change system parameters while the CPU Unit is running if needed).

Position Data

- Write a position data transfer command to the position data write address in the command area using the IOWR instruction to transfer position data indirectly to the MC Unit.

↓

- Change position data directly using IOWR instructions.

↓

- Use a Teaching Box or CX-Motion to create and write position data.

Monitor Data

Read monitor data with IORD instructions from a ladder program while the CPU Unit is running.

Command Area

Execute functions with the IOWR instruction as needed for the following.

- Writing position data or system parameters to flash memory
- Automatically downloading MC programs and position data to the MC Unit from an external memory device on a personal computer while CX-Motion is running
- Setting the present position
- Setting the teaching address for a task
- Setting the override function selection (See note.)

Note Applicable only with Unit Ver. 1.15 or later, and with Units whose model number ends in -V1.

3-2 Determining the Task Configuration

The tasks must be configured when an MC Unit is first used. Set the configuration in the unit parameters under the system parameters. (Refer to *Section 3-3 System Parameters.*) The MC programs must be changed if the task configuration is changed after a system has already been built with a certain task configuration.

3-2-1 Task Configuration

A maximum of 4 tasks can be set with the CS1W-MC421. A task is a unit that is used to execute a program.

If four tasks are executed simultaneously, the MC Unit will function like four controllers capable of controlling the X, Y, Z and U axes. The same axis cannot be set for more than one task.

With a CS1W-MC221, a maximum of two tasks can be set, enabling X and Y axes control only.

Example 1: Four Tasks, Four Axes

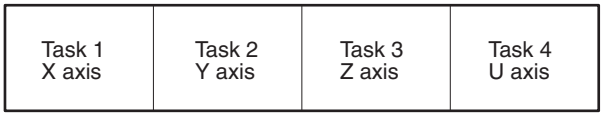

Example 2: Two Tasks, Three Axes

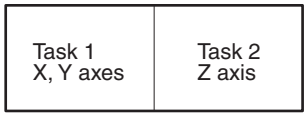

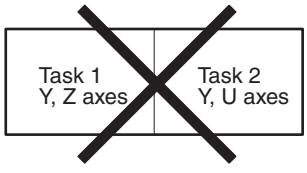

Example 3: Two Tasks, Four Axes



Example 4: One Task, Two Axes

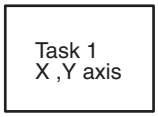

Note The default task configuration (axis configuration, number of tasks, task axis declaration) is shown in the following table. The task configuration must be set as an initial setting when any other task configuration is required.

Default Task Configuration

Item	CS1W-MC421	CS1W-MC221
Axis configuration	4 axes	2 axes
Number of tasks	1 task	1 task
Task axis declaration for task 1	X, Y, Z and U axes	X and Y axes
Task axis declaration for task 2	Not used	Not used
Task axis declaration for task 3	Not used	Not used
Task axis declaration for task 4	Not used	Not used

The MC programs are managed by the number of tasks, and new MC programs must be created for a new task configuration if the above parameters are changed after the MC programs have been created. Refer to the following procedure for changing the task configuration.

Changing the Task Configuration

Use the following procedure to change the task configuration.

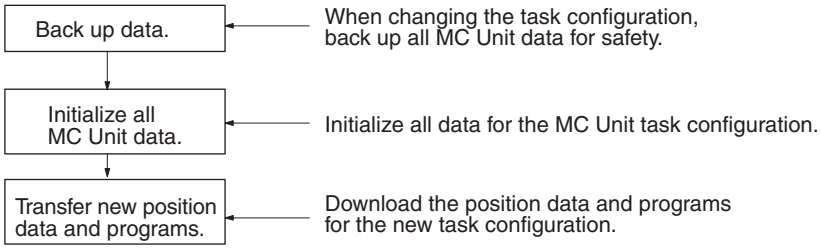

1,2,3...

1. Data Backup
   Use CX-Motion to transfer the system parameters, programs, and position data stored in the MC Unit to the personal computer.
2. Data Initialization
   a) Use CX-Motion to delete all MC Unit programs and write all data to flash memory.
   b) Use CX-Motion to open MC Unit parameters and change the number of tasks. If there are other parameters that should be changed, change and save them. (Configuring a task)
   c) Transfer the system parameters created in step 2 from the personal computer to the MC Unit and write all data to flash memory.

d) Turn the MC Unit power supply OFF and back ON again. (The program configuration will be determined automatically.)

These steps will initialize the MC Unit with the new task configuration.

3. Data Transfer

a) Create the position data and programs for the new task configuration and transfer the data and programs from the personal computer to the MC Unit.

b) When the entire position data and program have been transferred, write all data to flash memory.

These steps complete the MC Unit setup.

3-3 System Parameters

System parameters are comprised of three groups of parameters. The CS1W-MC421 has axis parameters for 4 axes; the CS1W-MC221, for 2 axes.

1,2,3...

1. Unit parameters
2. Memory management parameter
3. Axis parameters
   - Machine parameters
   - Coordinate parameters
   - Feed-rate parameters
   - Zone parameters
   - Servo parameters

3-3-1 System Parameters

The following table describes the function of each group of parameters.

Parameters		Function
Unit parameters		Specify information inherent to the Unit, such as the number of axes used and the number of tasks.
Memory management parameter		Specifies the range of the position data for teaching in each task.
Axis parameters (for 2 or 4 axes)	Machine parameters	Specify machine and electrical system parameters, such as the minimum setting unit, display unit, encoder resolution, pulse rate, and operating ranges.
	Coordinate parameters	Specifies the offset values for the reference and workpiece coordinate systems.
	Feed-rate parameters	Specifies feed-rate information, such as the maximum feed rate and maximum interpolation feed rate.
	Zone parameters	Specifies zone information.
	Servo parameters	Specifies servo system information such as the position loop gain and in-position.

Note All data can be read by specifying the address of the data in the IORD instruction. Position data as well as acceleration/deceleration time, interpolation acceleration/interpolation deceleration time, MPG ratio, zone parameters and servo parameters in coordinate parameters, and feed-rate parameters from system parameters can be transferred to the Unit using the IOWR instruction.

3-3-2 Description of System Parameters

Unit Parameters

The following unit parameters can be set.

Parameter name	Function
Axis configuration (See note 2.)	Sets the number of axes to use in the MC Unit: 1 to 4 (2) axes
Number of tasks (See note 2.)	Sets the number of tasks to use in the MC Unit: 1 to 4 (2) tasks
Task axis declaration (See note 2.)	Sets the axes used for each task
Output port setting	Sets whether a general output or brake signal output is output from the port.
MPG/sync encoder setting	Sets whether to use an MPG or a sync encoder.
Pass Mode	Selects the time for switching to the next operation in pass operation and sets whether to use constant acceleration feed rate when operating just one axis.
Teaching Box language/autoload timeout	Selects the Teaching Box message language and sets the automatic loading time up time.

Note

1. Parenthesis indicate CS1W-MC221 settings.
2. Be sure to set these three task configuration-related settings (axis configuration, number of tasks, and task axis declaration) as initial settings.

   The following table shows the default settings. Be sure to change the unit parameters (axis configuration, number of tasks, and task axis declaration) if you use a task configuration other than that in the table.

Default Task Configuration

Parameter	CS1W-MC421	CS1W-MC221
Axis configuration	4 axes	2 axes
Number of tasks	1 task	1 task
Task axis declaration for task 1	X, Y, Z and U axes	X and Y axes
Task axis declaration for task 2	Not used.	Not used.
Task axis declaration for task 3	Not used.	Not used.
Task axis declaration for task 4	Not used.	Not used.

The MC programs are managed by the number of tasks, and new MC programs must be created for a new task configuration if the above parameters are changed after the MC programs have been created. Refer to *3-2 Determining the Task Configuration* for the procedure to change the task configuration.

Memory Management Parameter

The memory management parameter is used to set position data for each task. An MC program can use a total of 2,000 position data addresses (A0000 to A1999). This parameter is used to prevent data from being incorrectly used when two or more tasks are involved.

Machine Parameters

Machine parameters determine the minimum unit setting, rotation direction, stop method, and other machine configuration settings, as well as the operating procedure and type of servomotor used. The parameters are set for each axis that is used (X, Y, Z and U axes).

Parameter name	Function
Minimum unit setting	Specifies the minimum unit for the machine system settings: 1, 0.1, 0.01, 0.001. 0.0001.
Axis Mode/display unit	Specifies Normal Feed Mode or Unlimited Feed Mode at Axis Mode and specifies the unit that will be used when monitoring the present position: mm, inches, degrees, pulses.
Rotation direction	Specifies whether the motor will rotate in forward or reverse when the command voltage to the servomotor driver is positive (+).
Emergency/limit input stopping methods	Specifies the stopping method used when an emergency stop or limit input is received.
Encoder ABS/INC	Sets the type of encoder used.
Encoder resolution	Sets the number of encoder pulses output (encoder frequency dividing ratio) when the servomotor rotates once.
Encoder ratio	Sets the encoder ratio: 1, 2 or 4
Encoder polarity	Sets whether the encoder will advance in phase A or phase B when the servomotor is rotating in the forward direction.
Pulse rate	Sets how much the axis will move per feedback pulse (numerator/denominator, set individually).
Max. motor frequency	Sets the number of servomotor rotations with a speed reference of 10 V applied.
Positive (+) or negative (–) software limit	Sets the limit monitored in the software.
Origin search method	Sets the origin search operation mode.
Origin search direction	Sets whether to move in the positive or negative direction when performing an origin search.
Origin deceleration method	Sets whether to use the origin proximity input signal or to use the limit input signal as the origin proximity input signal and it sets the deceleration method used when a limit input signal is detected.
Origin proximity input logic	Sets whether the origin proximity input is normally open or normally closed.
Wiring check	Decide to whether or not to perform wiring check at the time of servo lock.
Wiring check time	Sets the time from test pulse output until the feedback pulse is checked.
Wiring check pulses	Sets the number of test pulses in the wiring check.
ABS encoder default setting	The ABS encoder default setting is displayed when it is executed.

Coordinate Parameters

Coordinate parameters are used to set the offset for each axis from the machine origin or the reference origin.

Parameter name	Function
Reference origin offset value	Origin position in the reference coordinate system (offset from the machine origin)
Workpiece origin offset value	Origin position in the workpiece coordinate system (offset from the reference origin)

The machine origin is the origin set at origin search and is where the encoder counter reads zero. It is set from the absolute origin setting when an absolute encoder is used.

The desired reference coordinate system can be set using a G code.

G50: Reference coordinate system

G51: Workpiece coordinate system

It is easier to use the workpiece origin offset change code (G53) for multiple positioning in the same pattern. This is because coordinate parameter settings will not change if the workpiece origin is changed from a G language program.

Feed-rate Parameters

Feed-rate parameters are used to set the maximum feed, maximum interpolation feed and other rate settings, acceleration and deceleration time settings, acceleration and deceleration curve type settings, and the MPG ratio/electronic gear setting for each axis.

Parameter name	Function
Maximum feed rate	Sets the maximum feed rate in PTP operation.
Maximum interpolation feed rate	Sets the maximum feed rate in interpolation operation.
High-speed origin search feed rate	When an origin search is executed, it is performed at this feed rate until an origin proximity sensor input is received.
Low-speed origin search feed rate	When an origin search is executed, it is performed at this feed rate until phase Z is detected after an origin proximity sensor input is received.
Maximum jog feed rate	Sets the maximum jog feed rate.
Acceleration/deceleration curve	Specifies whether the acceleration/deceleration curve is trapezoidal or S-shaped.
Acceleration time	Sets the time required to accelerate from zero to the maximum feed rate in PTP operation.
Deceleration time	Sets the time required to decelerate from the maximum feed rate to zero in PTP operation.
Interpolation acceleration time	Sets the time required to accelerate from zero to the maximum interpolation feed rate in interpolation operation.
Interpolation deceleration time	Sets the time required to decelerate from the maximum interpolation feed rate to zero in interpolation operation.
MPG ratio (1 to 4)/electronic gear (1 to 4)	A maximum of four ratios can be set for pulses when an MPG or sync encoder is used (numerator and denominator set separately).

Zone Parameters

The following values are set as zone parameters. A zone is a specified range for each axis. If the present position is in a zone, then the zone flag in the PLC interface area will turn ON (1). A maximum of 8 zones can be set per axis.

Parameter name	Function
Zone specification	Sets whether or not to use the zone function and it sets the timing that will make the zone setting valid if the function is used.
Negative zone setting	Sets the lower limit of the zone.
Positive zone setting	Sets the upper limit of the zone.

Servo Parameters

The following values are set and adjusted as servo parameters.

Parameter name	Function
Error counter warning value	Sets the number of error counter pulses used to detect an error counter warning or error counter overflow.
In-position	Sets the number of error counter pulses used to decide if positioning has been completed.
Position loop gain	Adjusts the gain used to adjust servo system response.
Position loop feedforward gain	Adjusts the gain used to adjust servo system response.
Backlash correction	Sets the backlash correction value for the mechanical system.
Brake OFF time	Sets the brake OFF time (the duration from the brake OFF output of the MC Unit to the actual brake OFF operation) when the output port is set for a brake output.
Brake ON time	Sets the brake ON time (the duration from the brake ON output of the MC Unit to the actual brake ON operation) when the output port is set for a brake output.

Set the in-position (positioning complete width) based on the accuracy required by the system. It will take longer to position the equipment if the in-position is set lower than is necessary.

Use the following initial position loop gain settings for mechanical system rigidity and make minor adjustments while watching system response.

General machining tools: 50 to 70 (1/s)

General machines and assembly equipment: 30 to 50 (1/s)

Industrial robots: 10 to 30 (1/s)

Position loop feedforward gain is effective when the position loop gain is small (25 (1/s) or less). Feedforward gain is not passed through the error counter but is directly added to the speed reference voltage, thus increasing the response speed of the Servo system. Set position loop feedforward gain only after completing adjustment of the Servo Driver and the position loop gain. Always increase it gradually starting from 0%. Overshooting will increase if the position loop feedforward gain is too large.

3-3-3 System Parameter Addresses

Specify system parameters at the following addresses in internal MC Unit memory. Specify the address using hexadecimal if you are using an IOWR/IORD instruction to specify the address. In the table, R means the parameter is read-only and R/W means the data can be read and written. The number in parentheses in the address range column is the decimal address. When transferring system parameters, the number of words to transfer is 0002 hex.

Parameter		R/W	Addresses
Unit parameters		R	0FA0 to 0FA9 hex (4000 to 4009)
Memory management parameters		R	1004 to 100D hex (4100 to 4109)
Machine parameters	X axis	R	1068 to 1080 hex (4200 to 4224)
	Y axis	R	1081 to 1099 hex (4225 to 4249)
	Z axis	R	109A to 10B2 hex (4250 to 4274)
	U axis	R	10B3 to 10CB hex (4275 to 4299)

Parameter		R/W	Addresses
Coordinate parameters	X axis	R/W	10CC to 10CF hex (4300 to 4303)
	Y axis	R/W	10E5 to 10E8 hex (4325 to 4328)
	Z axis	R/W	10FE to 1101 hex (4350 to 4353)
	U axis	R/W	1117 to 111A hex (4375 to 4378)
Feed-rate parameters	X axis	R/W (See note.)	1130 to 1143 hex (4400 to 4419)
	Y axis	R/W (See note.)	1149 to 115C hex (4425 to 4444)
	Z axis	R/W (See note.)	1162 to 1175 hex (4450 to 4469)
	U axis	R/W (See note.)	117B to 118E hex (4475 to 4494)
Zone parameters	X axis	R/W	1194 to 11A4 hex (4500 to 4516)
	Y axis	R/W	11AD to 11BD hex (4525 to 4541)
	Z axis	R/W	11C6 to 11D6 hex (4550 to 4566)
	U axis	R/W	11DF to 11EF hex (4575 to 4591)
Servo parameters	X axis	R/W	11F8 to 1201 hex (4600 to 4609)
	Y axis	R/W	1211 to 121A hex (4625 to 4634)
	Z axis	R/W	122A to 1233 hex (4650 to 4659)
	U axis	R/W	1243 to 124C hex (4675 to 4684)

Note Only acceleration/deceleration time, interpolation time, interpolation deceleration time, and MPG ratio/electronic gear data can be written. Other data is read-only.

3-3-4 Data Configuration for System Parameters

In the table, R means the parameter is read-only and R/W means the data can be read and written. Only the X and Y axes and tasks 1 and 2 are available with the CS1W-MC221. Numbers for addresses and default settings are hexadecimal on top and are decimal in parenthesis () at the bottom.

Unit Parameters

Address		R/W	Name	Description	Default setting Top: L + 1, Bottom: L	
MC221	MC421				MC221	MC421
0FA0 (4000)	0FA0 (4000)	R	Axis configuration	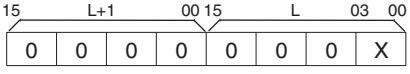 X = 1: One axis is used, X = 2: Two axes are used, X = 3: Three axes are used, X = 4: Four axes are used	0000 0002 (2)	0000 0004 (4)
0FA1 (4001)	0FA1 (4001)	R	No. of tasks	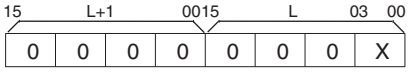 X = 1: One task is used, X = 2: Two tasks are used, X = 3: Three tasks are used, X = 4: Four tasks are used	0000 0001 (1)	0000 0001 (1)

Address		R/W	Name	Description	Default setting Top: L + 1, Bottom: L	
MC221	MC421				MC221	MC421
0FA2 (4002)	0FA2 (4002)	R	Task axis declaration (for task 1)	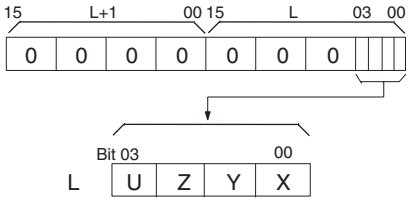 Specifies the axis or axes used for task 1. Bits 00 to 03 correspond to axes X through U. X = 1: Axis is used. X = 0: Axis is not used.	0000 0003 (3)	0000 000F (15)
0FA3 (4003)	0FA3 (4003)	R	Task axis declaration (for task 2)	Specifies the axis or axes used for task 2. The data configuration is the same as that of the task axis declaration for task 1.	0000 0000 (0)	
---	0FA4 (4004)	R	Task axis declaration (for task 3)	Specifies the axis or axes used for task 3. The data configuration is the same as that of the task axis declaration for task 1.	0000 0000 (0)	
---	0FA5 (4005)	R	Task axis declaration (for task 4)	Specifies the axis or axes used for task 4. The data configuration is the same as that of the task axis declaration for task 1.	0000 0000 (0)	
0FA6 (4006)	0FA6 (4006)	R	Output port setting	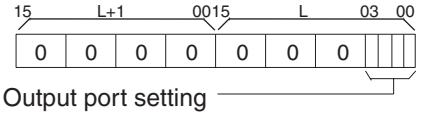 Specifies whether the output ports will be used for general output or brake signal output. Bits 00 to 03 correspond to output ports 1 to 4 if the ports are used for general output and to axes X through U if the ports are used for brake signal output. 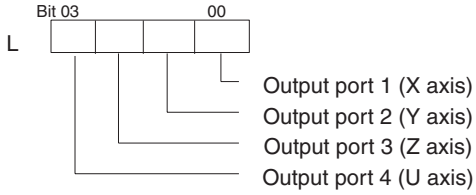 X = 0: General output, X = 1: Brake signal output	0000 0003 (3)	0000 000F (15)
0FA7 (4007)	0FA7 (4007)	R	MPG/sync encoder ratio	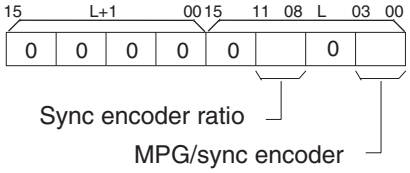 Specifying MPG/sync encoder. Specifies whether to use an MPG or a sync encoder. X = 0: MPG, X = 1: Sync encoder Sync encoder ratio Specifies the sync encoder ratio. X = 0: ratio of 4, X = 1: ratio of 2, X = 2: ratio of 1	0000 0000 (0)	

Address		R/W	Name	Description	Default setting Top: L + 1, Bottom: L	
MC221	MC421				MC221	MC421
0FA8 (4008)	0FA8 (4008)	R	Pass Mode	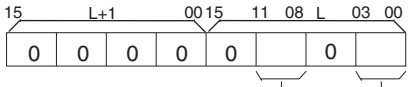 Acceleration mode Specifies the pass time mode Specifying the pass time mode Specifies whether to move to the next operation in the preceding interpolation acceleration time or to the next operation in the preceding interpolation deceleration time during pass operation. X = 0: Interpolation acceleration time, X = 1: Interpolation deceleration time Acceleration mode Specifies whether to linearly interpolate or accelerate just one axis or to accelerate the axis at a fixed rate until the start of pass operation. X = 0: Invalid, X = 1: Valid (Fixed acceleration)	0000 0000 (0)	
0FA9 (4009)	0FA9 (4009)	R	Teaching Box language/autoload timeout	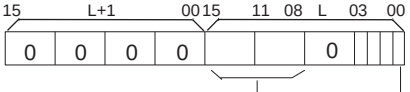 Autoload timeout T.Box language T.Box language Specifies whether the T.Box message is displayed in English or Japanese. (Only bit 0 is valid) X = 0: English, X = 1: Japanese Autoload timeout Specifies whether the time up time is displayed when the automatic loading function is used. Range: 00 to B4 Hex (0 to 180 s) Autoloading will not time-up when 00 is set.	0000 0000 (0)	
1004 (4100)	1004 (4100)	R	First position data number for task 1	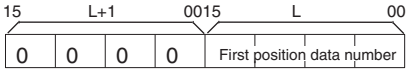 Specifies the first position data number for task 1.	0000 0000 (0)	
1005 (4101)	1005 (4101)	R	Last position data number for task 1	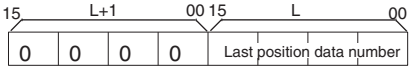 Specifies the last position data number for task 1. Teaching is possible in this range only. Range: 0000 to 07CF Hex (0 to 1999)	0000 07CF (1999)	
1006 (4102)	1006 (4102)	R	First position data number for task 2	Specify the first and last position data numbers for task 2. The data configuration and range are the same as those for task 1.	0000 0000 (0)	
1007 (4103)	1007 (4103)	R	Last position data number for task 2		0000 07CF (1999)	

Address		R/W	Name	Description	Default setting Top: L + 1, Bottom: L	
MC221	MC421				MC221	MC421
---	1008 (4104)	R	First position data number for task 3	Specify the first and last position data number for task 3. The data configuration and range are the same as those for task 1.	0000 0000 (0)	
---	1009 (4105)	R	Last position data number for task 3		0000 07CF (1999)	
---	100A (4106)	R	First position data number for task 4	Specify the first and last position data number for task 4. The data configuration and range is the same as that for task 1.	0000 0000 (0)	
---	100B (4107)	R	Last position data number for task 4		0000 07CF (1999)	
100C (4108)	100C (4108)	R	Reserved for the system	These addresses are reserved for the system.	---	
100D (4109)	100D (4109)	R	Reserved for the system		---	

Machine Parameters

Address				R/W	Name	Description	Default setting Top: L + 1, Bottom: L
MC221		MC421					
X	Y	Z	U				
1068 (4200)	1081 (4225)	109A (4250)	10B3 (4275)	R	Minimum setting unit	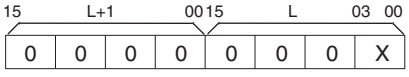 Specifies the minimum unit (i.e., the decimal position) for the mechanical system. X = 0 (1) X = 1 (0.1) X = 2 (0.01) X = 3 (0.001) X = 4 (0.0001)	0000 0000 (0)
1069 (4201)	1082 (4226)	109B (4251)	10B4 (4276)	R	Axis Mode/ display unit	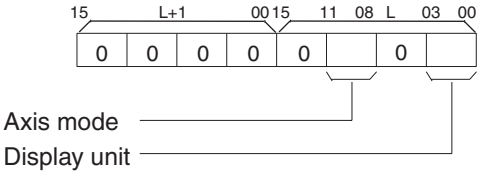 Axis Mode Specifies the Axis Feed Mode. X = 0: Normal Feed Mode, X = 1: Unlimited Feed Mode Display unit Specifies unit displayed by CX-Motion. 0: mm 1: inch 2: degree 3: pulse	0000 0000 (3)
106A (4202)	1083 (4227)	109C (4252)	10B5 (4277)	R	Rotation direction	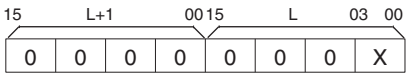 Specifies the rotation direction of the motor. X = 0: CW with positive voltage. X = 1: CCW with positive voltage.	0000 0000 (0)

Address				R/W	Name	Description	Default setting Top: L + 1, Bottom: L
MC221		MC421					
X	Y	Z	U				
106B (4203)	1084 (4228)	109D (4253)	10B6 (4278)	R	Emergency stop/limit input stop	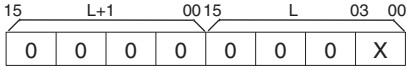 Specifies machine movement with emergency stop input or CW/CCW limit switch input. X = 0: Voltage output set to 0 V immediately. The servo driver RUN command output will turn OFF after voltage is output for 0.5 s. X = 1: Stop after error count is exhausted.	0000 0000 (0)
106C (4204)	1085 (4229)	109E (4254)	10B7 (4279)	R	Encoder ABS/INC	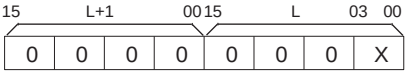 Specifies the type of encoder. X = 0: Incremental encoder X = 1: Absolute encoder for U or W Series X = 2: Absolute encoder for G Series **Note** "2: Absolute encoder for G Series" can be used with unit version 1.1 or later.	0000 0000 (0)
106D (4205)	1086 (4230)	109F (4255)	10B8 (4280)	R	Encoder resolution	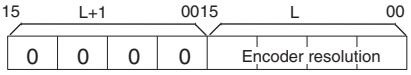 Specified the resolution of the encoder. Range: 0001 to FFFF Hex (1 to 65535 [ppr])	0000 0000 (1000)
106E (4206)	1087 (4231)	10A0 (4256)	10B9 (4281)	R	Encoder ratio	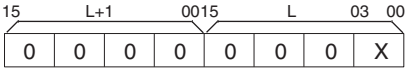 Specifies the multiplier ratio for the encoder. X = 0: ratio of 4, X = 1: ratio of 2, X = 2: ratio of 1	0000 0000 (0)
106F (4207)	1088 (4232)	10A1 (4257)	10BA (4282)	R	Encoder polarity	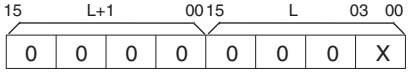 Specifies the polarity of the encoder. X = 0: CW with increments. X = 1: CCW with decrements.	0000 0000 (0)
1070 (4208)	1089 (4233)	10A2 (4258)	10BB (4283)	R	Pulse rate numerator	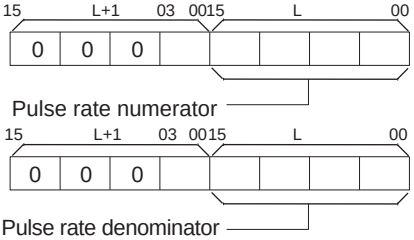	0000 0001 (1)
1071 (4209)	108A (4234)	10A3 (4259)	10BC (4284)	R	Pulse rate denominator	Specify the numerator and denominator of the pulse rate. Range: 00000001 to 000186A0 Hex (1 to 100000) The pulse rate indicates the weight of each encoder feedback pulse (mm/pulse, deg/pulse, inches/pulse, pulses/pulse). Range: 1/100000 ≤ pulse rate ≤ 1	0000 0001 (1)

Address				R/W	Name	Description	Default setting Top: L + 1, Bottom: L
MC221		MC421					
X	Y	Z	U				
1072 (4210)	108B (4235)	10A4 (4260)	10BD (4285)	R	Max. motor frequency	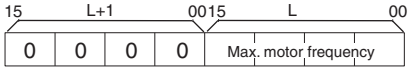 Specifies the maximum motor frequency. Range: 0001 to 7FFF Hex (1 to 32767 [r/min])	0000 0BB8 (3000)
1073 (4211)	108C (4236)	10A5 (4261)	10BE (4286)	R	Reserved for the system	These addresses are reserved for the system.	---
1074 (4212)	108D (4237)	10A6 (4262)	10BF (4287)	R	Reserved for the system	These addresses are reserved for the system.	---
1075 (4213)	108E (4238)	10A7 (4263)	10C0 (4288)	R	Software limit (–)	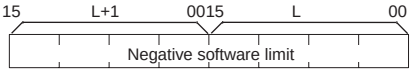 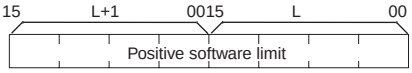 Specifies the negative and positive software limits. The data is 32-bit signed binary data. L+1: Leftmost 16 bits, L: Rightmost 16 bits Range: FD9DA601 to 026259FF Hex (–39999999 to 39999999) If the negative software limit is set to 18F Hex (399), the minimum setting unit is 0.01, and the unit is mm, the negative software limit would be 3.99 mm (399 × 0.01).	FD9D A601 (–39999999)
1076 (4214)	108F (4239)	10A8 (4264)	10C1 (4289)	R	Software limit (+)		0262 59FF (39999999)
1077 (4215)	1090 (4240)	10A9 (4265)	10C2 (4290)	R	Origin search method	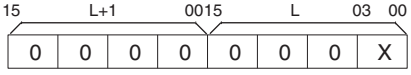 Specifies the method to search for the origin. X = 0: Origin mode when power is turned ON. X = 1: Limit reverse mode X = 2: Single direction mode	0000 0001 (1)
1078 (4216)	1091 (4241)	10AA (4266)	10C3 (4291)	R	Origin search direction	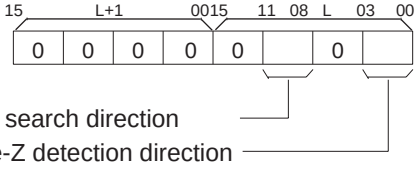 Specifies the phase-Z detection direction and origin search start direction for an origin search. If the origin search start direction is set to 1, then the search direction will be opposite the Z-phase detection direction only if the origin proximity signal input and CW/CCW limit signal input all turn OFF. X = 0: Same as the phase-Z detection direction, X = 1: Opposite the phase-Z detection direction Phase-Z Detection Direction Specifies the phase-Z detection direction. 0: Positive; 1: Negative	0000 0000 (0)

Address				R/W	Name	Description	Default setting Top: L + 1, Bottom: L
MC221		MC421					
X	Y	Z	U				
1079 (4217)	1092 (4242)	10AB (4267)	10C4 (4292)	R	Origin deceleration method	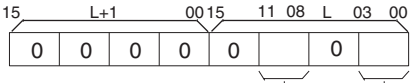 Specifies the deceleration method when the CW or CCW limit input signal is detected. X = 0: Accumulate pulses to stop, X = 1: Decelerate to a stop Origin deceleration method Specifies the origin deceleration method. 0: Use the origin proximity input signal. 1: Use the limit input signal for the origin proximity input signal.	0000 0000 (0)
107A (4218)	1093 (4243)	10AC (4268)	10C5 (4293)	R	Origin proximity input logic	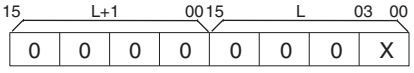 Specifies the origin proximity input logic. X = 0: Normally open. X = 1: Normally closed.	0000 0000 (0)
107B (4219)	1094 (4244)	10AD (4269)	10C6 (4294)	R	Wiring check	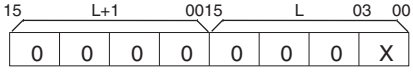 Specifies whether the wiring check function is used. X = 0: The wiring check function is not used. X = 1: The wiring check function is used.	0000 0001 (1)
107C (4220)	1095 (4245)	10AE (4270)	10C7 (4295)	R	Wiring check time	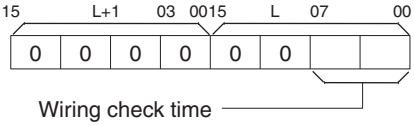 Specifies the wiring check time within a range of 0 to 99 (x 10 ms). Range: 00 to 63 Hex (0 to 99 [x 10 ms])	0000 000A (10)
107D (4221)	1096 (4246)	10AF (4271)	10C8 (4296)	R	Wiring check pulses	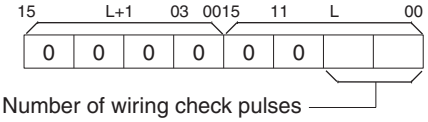 Specifies the number of pulses to check the wiring within a range of 0 to 999 pulses. Range: 000 to 3E7 Hex (0 to 999 [pulses])	0000 0032 (50)
107E (4222)	1097 (4247)	10B0 (4272)	10C9 (4297)	R	Absolute position setting	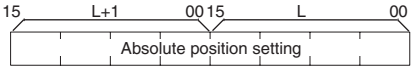 Specifies the correction value for the ABS encoder used when the ABS origin setting is executed. The data is 32-bit signed binary data. L+1: Leftmost 16 bits, L: Rightmost 16 bits Range: 80000000 to 7FFFFFFF Hex (–2147483648 to 2147483647)	0000 0000 (0)

Address				R/W	Name	Description	Default setting Top: L + 1, Bottom: L
MC221		MC421					
X	Y	Z	U				
107F (4223)	1098 (4248)	10B1 (4273)	10CA (4298)	R	Reserved for the system	These addresses are reserved for the system.	---
1080 (4224)	1099 (4249)	10B2 (4274)	10CB (4299)	R	Reserved for the system	These addresses are reserved for the system.	---

Coordinate Parameters

Address				R/W	Name	Description	Default setting Top: L + 1, Bottom: L
MC221		MC421					
X	Y	Z	U				
10CC (4300)	10E5 (4325)	10FE (4350)	1117 (4375)	R/W	Reference origin offset value	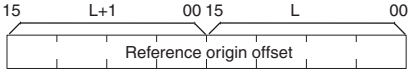 Specifies the offset of the reference origin. The data is 32-bit signed binary data. L+1: Leftmost 16 bits, L: Rightmost 16 bits Range: FD9DA601 to 026259FF Hex (–39999999 to 39999999) The minimum setting unit is set to 2 (for 0.01), the display unit is set to 0 (for mm) and the reference origin offset is 3.99 [mm] (i.e., 399 x 0.01) if the data is 399. If the value is changed, the new value will be valid when the next origin search is executed.	0000 0000 (0)
10CD (4301)	10E6 (4326)	10FF (4351)	1118 (4376)	R/W	Workpiece origin offset value	Sets the offset value of the workpiece origin. There is no difference in data configuration, range, or unit between the workpiece origin offset value and reference origin offset value. When this value is changed, it will become valid from the time when the next program is executed from the first block.	0000 0000 (0)
10CE (4302)	10E7 (4327)	1100 (4352)	1119 (4377)	R/W	Reserved for the system	These addresses are reserved for the system.	---
10DF (4303)	10E8 (4328)	1101 (4353)	111A (4378)	R/W	Reserved for the system	These addresses are reserved for the system.	---

Feed Rate Parameters

Address				R/W	Name	Description	Default setting Top: L + 1, Bottom: L
MC221		MC421					
X	Y	Z	U				
1130 (4400)	1149 (4425)	1162 (4450)	117B (4475)	R	Maximum feed rate	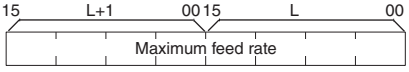 Specifies the upper feed rate limit. The data is 32-bit signed binary data. L+1: Leftmost 16 bits, L: Rightmost 16 bits Range: FD9DA601 to 026259FF Hex (–39999999 to 39999999) The range varies with the encoder resolution, pulse rate and display unit. The minimum setting unit is set to 2 (for 0.01), the display unit is set to 0 (for mm) and the maximum feed rate is 3.99 [mm/s] (i.e., 399 x 0.01) if the data is 399.	0003 0D40 (200000)
1131 (4401)	114A (4426)	1163 (4451)	117C (4476)	R	Maximum interpolation feed rate	Specifies the upper limit of the interpolation feed rate. There is no difference in data configuration, range, or unit between the maximum interpolation feed rate and maximum feed rate.	0003 0D40 (200000)
1132 (4402)	114B (4427)	1164 (4452)	117D (4477)	R	High-speed origin search feed rate	Specifies the high-speed origin search feed rate. There is no difference in data configuration, range, or unit between the high-speed origin search feed rate and maximum feed rate.	0000 4E20 (200000)
1133 (4403)	114C (4428)	1165 (4453)	117E (4478)	R	Low-speed origin search feed rate	Specifies the low-speed origin search feed rate. There is no difference in data configuration, range, or unit between the low-speed origin search feed rate and maximum feed rate.	0000 07D0 (2000)
1134 (4404)	114D (4429)	1166 (4454)	117F (4479)	R	Maximum jog feed rate	Specifies the upper limit of the jog feed rate. There is no difference in data configuration, range, or unit between the maximum jog feed rate and maximum feed rate.	0000 4E20 (20000)
1135 (4405)	114E (4430)	1167 (4455)	1180 (4480)	R	Acceleration/deceleration curve	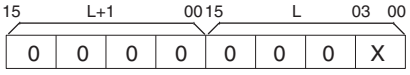 Specifies the type of acceleration/deceleration curve. X = 0: Trapezoidal curve X = 1: S-shaped curve	0000 0000 (0)
1136 (4406)	114F (4431)	1168 (4456)	1181 (4481)	R/W	Acceleration time	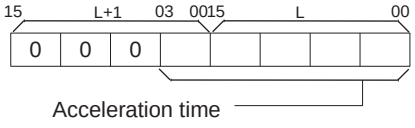 Sets the acceleration time to obtain the maximum feed rate. Range: 00000000 to 000186A0 Hex (0 to 100000 [ms])	0000 0064 (100)
1137 (4407)	1150 (4432)	1169 (4457)	1182 (4482)	R/W	Deceleration time	Sets the deceleration time to reduce the feed rate to zero from the maximum feed rate. The data configuration, range and units are the same as that for acceleration time.	0000 0064 (100)
1138 (4408)	1151 (4433)	116A (4458)	1183 (4483)	R/W	Interpolation acceleration time	Sets the acceleration time to obtain the maximum interpolation feed rate. There is no difference in data configuration, range, or unit between the deceleration time and interpolation acceleration time.	0000 0064 (100)

Address				R/W	Name	Description	Default setting Top: L + 1, Bottom: L
MC221		MC421					
X	Y	Z	U				
1139 (4409)	1152 (4434)	116B (4459)	1184 (4484)	R/W	Interpolation deceleration time	Sets the deceleration time to reduce the interpolation feed rate to zero from the maximum interpolation feed rate. There is no difference in data configuration, range, or unit between the interpolation deceleration time and deceleration time.	0000 0064 (100)
113A (4410)	1153 (4435)	116C (4460)	1185 (4485)	R/W	MPG ratio numerator (1)/ electronic gear ratio numerator (1)	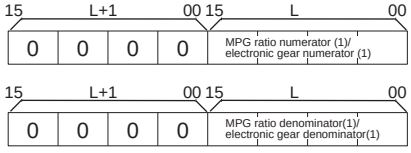 Sets the ratio for an MPG/electronic gear pulse for setting 1. Range of numerator: D8F0 to 2710 Hex (–10000 to 10000) Range of denominator: 0001 to 2710 Hex (1 to 10000) 0.0001 ≤ |Numerator/denominator| ≤ 10000 When the numerator is negative, operation is in the opposite direction. (In Unit Ver. 1.14 or earlier, the limit input in the direction opposite to movement is monitored. In Unit Ver. 1.15 or later and Units with model number ending in -V1, the limit input in the direction of movement is monitored. Take this into consideration in system design.)	0000 0001 (1)
113B (4411)	1154 (4436)	116D (4461)	1186 (4486)	R/W	MPG ratio denominator(1)/ electronic gear ratio denominator(1)		0000 0001 (1)
113C (4412)	1155 (4437)	116E (4462)	1187 (4487)	R/W	MPG ratio numerator (2)/ electronic gear ratio numerator (2)	Sets the ratio for an MPG/electronic gear pulse for setting 2. The data configuration and range are the same as that for MPG ratio/electronic gear numerator (1)/denominator (1).	0000 000A (10)
113D (4413)	1156 (4438)	116F (4463)	1188 (4488)	R/W	MPG ratio denominator (2)/ electronic gear ratio denominator (2)		0000 0001 (1)
113E (4414)	1157 (4439)	1170 (4464)	1189 (4489)	R/W	MPG ratio numerator (3)/ electronic gear ratio numerator (3)	Sets the ratio for an MPG/electronic gear pulse for setting 3. The data configuration and range are the same as that for MPG ratio/electronic gear numerator (1)/denominator (1).	0000 0064 (100)
113F (4415)	1158 (4440)	1171 (4465)	118A (4490)	R/W	MPG ratio denominator (3)/ electronic gear ratio denominator (3)		0000 0001 (1)

Address				R/W	Name	Description	Default setting Top: L + 1, Bottom: L
MC221		MC421					
X	Y	Z	U				
1140 (4416)	1159 (4441)	1172 (4466)	118B (4491)	R/W	MPG ratio numerator (4)/ electronic gear ratio numerator (4)	Sets the ratio for an MPG/electronic gear pulse for setting 4. The data configuration and range are the same as that for MPG ratio/electronic gear numerator (1)/denominator (1).	0000 00C8 (200)
1141 (4417)	115A (4442)	1173 (4467)	118C (4492)	R/W	MPG ratio denominator (4)/ electronic gear ratio denominator (4)		0000 0001 (1)
1142 (4418)	115B (4443)	1174 (4468)	118D (4493)	R/W	Reserved for the system	These addresses are reserved for the system.	---
1143 (4419)	115C (4444)	1175 (4469)	118E (4494)	R/W	Reserved for the system	These addresses are reserved for the system.	---

Note The above parameters are used as the electronic gear ratio setting when MPG is selected in the unit parameters or the MPG ratio and sync encoder are selected.

Zone Parameters

Address				R/W	Name	Description	Default setting Top: L + 1, Bottom: L
MC221		MC421					
X	Y	Z	U				
1194 (4500)	11AD (4525)	11C6 (4550)	11DF (4575)	R/W	Zone specification	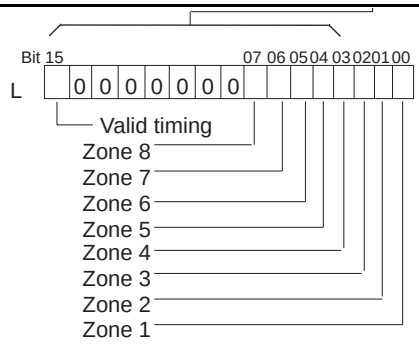 Valid timing Sets timing for validating zone settings. X = 0: Enables a zone at the end of the origin search, X = 1: Enables a zone whether or not the origin search is completed. Zone 1 to 8 Enables or disables zone 1 to zone 8 settings. Bits 00 to 07 correspond to zones 1 to 8. 1: Zone enabled 0: Zone disabled	0000 0000 (0)
1195 (4501)	11AE (4526)	11C7 (4551)	11E0 (4576)	R/W	Zone 1 negative direction setting	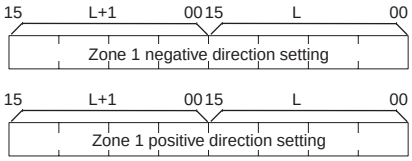 Sets the negative or positive direction range of zone 1. The data is 32-bit signed binary data. L+1: Leftmost 16 bits, L: Rightmost 16 bits Range: FD9DA601 to 026259FF hex (–39999999 to 39999999) This setting is referenced when a specified zone is valid and it must satisfy the following condition. Negative direction set value ≤ Positive direction set value The minimum setting unit is set to 2 (for 0.01), the display unit is set to 0 (for mm) and the negative direction set value for zone 1 is 3.99 [mm] (i.e., 399 x 0.01) if the data is 399.	0000 0000 (0)
1196 (4502)	11AF (4527)	11C8 (4552)	11E1 (4577)	R/W	Zone 1 positive direction setting		0000 0000 (0)
1197 (4503)	11B0 (4528)	11C9 (4553)	11E2 (4578)	R/W	Zone 2 negative direction setting	Sets the negative or positive direction range of zone 2. The data configurations, ranges, and units for the negative and positive direction set values are the same as those for zone 1.	0000 0000 (0)
1198 (4504)	11B1 (4529)	11CA (4554)	11E3 (4579)	R/W	Zone 2 positive direction setting		

Address				R/W	Name	Description	Default setting Top: L + 1, Bottom: L
MC221		MC421					
X	Y	Z	U				
1199 (4505)	11B2 (4530)	11CB (4555)	11E4 (4580)	R/W	Zone 3 negative direction setting	Sets the negative or positive direction range of zone 3. The data configurations, ranges, and units for the negative and positive direction set values are the same as those for zone 1.	0000 0000 (0)
119A (4506)	11B3 (4531)	11CC (4556)	11E5 (4581)	R/W	Zone 3 positive direction setting		
119B (4507)	11B4 (4532)	11CD (4557)	11E6 (4582)	R/W	Zone 4 negative direction setting	Sets the negative or positive direction range of zone 4. The data configurations, ranges, and units for the negative and positive direction set values are the same as those for zone 1.	0000 0000 (0)
119C (4508)	11B5 (4533)	11CE (4558)	11E7 (4583)	R/W	Zone 4 positive direction setting		
119D (4509)	11B6 (4534)	11CF (4559)	11E8 (4584)	R/W	Zone 5 negative direction setting	Sets the negative or positive direction range of zone 5. The data configurations, ranges, and units for the negative and positive direction set values are the same as those for zone 1.	0000 0000 (0)
119E (4510)	11B7 (4535)	11D0 (4560)	11E9 (4585)	R/W	Zone 5 positive direction setting		
119F (4511)	11B8 (4536)	11D1 (4561)	11EA (4586)	R/W	Zone 6 negative direction setting	Sets the negative or positive direction range of zone 6. The data configurations, ranges, and units for the negative and positive direction set values are the same as those for zone 1.	0000 0000 (0)
11A0 (4512)	11B9 (4537)	11D2 (4562)	11EB (4587)	R/W	Zone 6 positive direction setting		
11A1 (4513)	11BA (4538)	11D3 (4563)	11EC (4588)	R/W	Zone 7 negative direction setting	Sets the negative or positive direction range of zone 7. The data configurations, ranges, and units for the negative and positive direction set values are the same as those for zone 1.	0000 0000 (0)
11A2 (4514)	11BB (4539)	11D4 (4564)	11ED (4589)	R/W	Zone 7 positive direction setting		
11A3 (4515)	11BC (4540)	11D5 (4565)	11EE (4590)	R/W	Zone 8 negative direction setting	Sets the negative or positive direction range of zone 8. The data configurations, ranges, and units for the negative and positive direction set values are the same as those for zone 1.	0000 0000 (0)
11A4 (4516)	11BD (4541)	11D6 (4566)	11EF (4591)	R/W	Zone 8 positive direction setting		

Servo Parameters

Address				R/W	Name	Description	Default setting Top: L + 1, Bottom: L
MC221		MC421					
X	Y	Z	U				
11F8 (4600)	1211 (4625)	122A (4650)	1243 (4675)	R/W	Error counter warning value	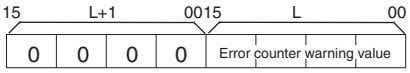 Sets the accumulated pulses warning value. Range: 0000 to FDE8 Hex (0 to 65000 [pulses])	0000 2710 (10000)
11F9 (4601)	1212 (4626)	122B (4651)	1244 (4676)	R/W	In-position range	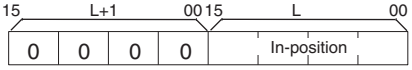 Sets to check the in-position. Range: 0000 to 2710 Hex (0 to 10000 [pulses])	0000 000A (10)
11FA (4602)	1213 (4627)	122C (4652)	1245 (4677)	R/W	Position loop gain	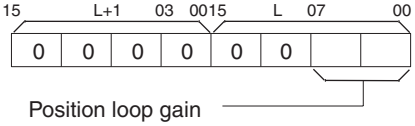 Sets the position loop gain. Range: 01 to FA Hex (1 to 250 [1/s])	0000 0028 (40)
11FB (4603)	1214 (4628)	122D (4653)	1246 (4678)	R/W	Position loop FF gain	 Sets the position loop FF gain. Range: 00 to 64 Hex (0 to 100 [%])	0000 0000 (0)
11FC (4604)	1215 (4629)	122E (4654)	1247 (4679)	R/W	Backlash correction value	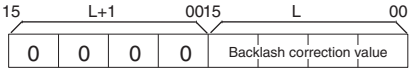 Sets the backlash correction value. Range: 0000 to 2710 Hex (0 to 10000 [pulses])	0000 0000 (0)
11FD (4605)	1216 (4630)	122F (4655)	1248 (4680)	R/W	Brake OFF time	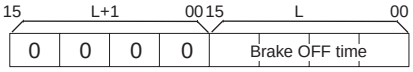 Sets the brake OFF time (the duration from the brake OFF output of the MC Unit to the actual brake OFF operation) when the output port is set for a brake output. Range: 0000 to 2710 hex (0 to 10000 [ms])	0000 0000 (0)
11FE (4606)	1217 (4631)	1230 (4656)	1249 (4681)	R/W	Brake ON time	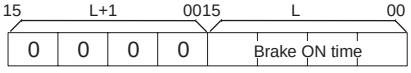 Sets the brake ON time (the duration from the brake ON output of the MC Unit to the actual brake ON operation) when the output port is set for a brake output. Range: 0000 to 2710 hex (0 to 10000 [ms])	0000 0000 (0)
11FF (4607)	1218 (4632)	1231 (4657)	124A (4682)	R/W	Reserved for the system	These addresses are reserved for the system.	---

Address				R/W	Name	Description	Default setting Top: L + 1, Bottom: L
MC221		MC421					
X	Y	Z	U				
1200 (4608)	1219 (4633)	1232 (4658)	124B (4683)	R/W	Reserved for the system	These addresses are reserved for the system.	---
1201 (4609)	121A (4634)	1233 (4659)	124C (4684)	R/W	Reserved for the system	These addresses are reserved for the system.	---

3-3-5 Timing that Validates Transferred System Parameters

Note Be sure to turn the MC Unit power OFF and then ON after system parameters have been transferred. The unit parameters and machine parameters will not change unless the power is turned back ON.

The following parameters will change even if the power is not turned back ON.

- Memory management parameters
- Coordinate parameters
- Feed-rate parameters
- Zone parameters
- Servo parameters

The following table shows the timing that is used to validate the preceding parameters.

Parameter group	Parameters	Timing
Coordinate parameters	Reference origin offset	Valid after the next origin search
	Workpiece origin offset	Valid after the next G51 operation
Feed-rate parameters	Maximum feed rate, maximum interpolation feed rate, high-speed origin search feed rate, low-speed origin search feed rate, maximum jog feed rate, acceleration time, deceleration time, interpolation acceleration time, interpolation deceleration time	Valid after the next operation • Automatic Mode From the next time a G code is executed. • Manual Mode From the next operation command.
	MPG ratio	Valid immediately
Others		Valid immediately

3-3-6 System Parameters

This section describes parameters and parameter settings when CX-Motion is used to set system parameters. Refer to the *CX-Motion Online Help* for details on the operating procedures for CX-Motion.

Unit Parameters

The CS1W-MC421 setting window for the CX-Motion is shown below. Unit and memory parameters are set from the same window.

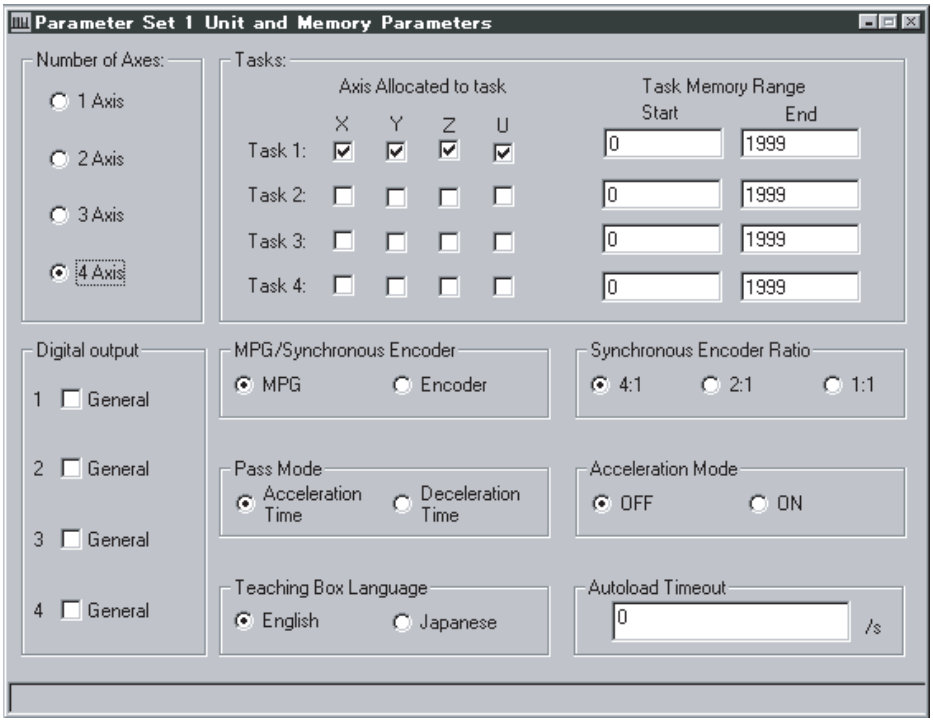

Number of Axes

Set a range of 1 to 4 axes for the CS1W-MC421. The default setting is 4 axes.

Set a range of 1 to 2 axes for the CS1W-MC22. The default setting is 2 axes.

Task Declarations

The X, Y, Z and U axes are allocated to task 1 in default settings for the CS1W-MC421. The X and Y axes are allocated to task 1 in default settings for the CS1W-MC221.

Digital Output Settings

These parameters set whether output ports will be used for general outputs or brake signal outputs. When used for brake signal outputs, general outputs 1 to 4 are brake signal outputs for the X through U axes. The default setting is for brake signal outputs. Refer to *6-14 Servo Lock and Unlock* for more details.

When using OMRON U-, W-, or G-series Servo Drivers, the use of the Driver's brake interlock is recommended.

MPG/Sync Encoder Setting

This parameter sets whether an MPG or sync encoder will be used. The sync encoder ratio (1, 2 or 4) is also set if a sync encoder is selected. The default setting is MPG and the sync encoder ratio is invalidated (fixed at a ratio of 1) if MPG is set.

Pass Mode

This parameter sets whether to move to the next operation using the preceding interpolation acceleration time or the preceding interpolation deceleration time for Pass Time Mode selection.

Acceleration Time Selected

The machine moves to the next operation in the preceding interpolation acceleration time.

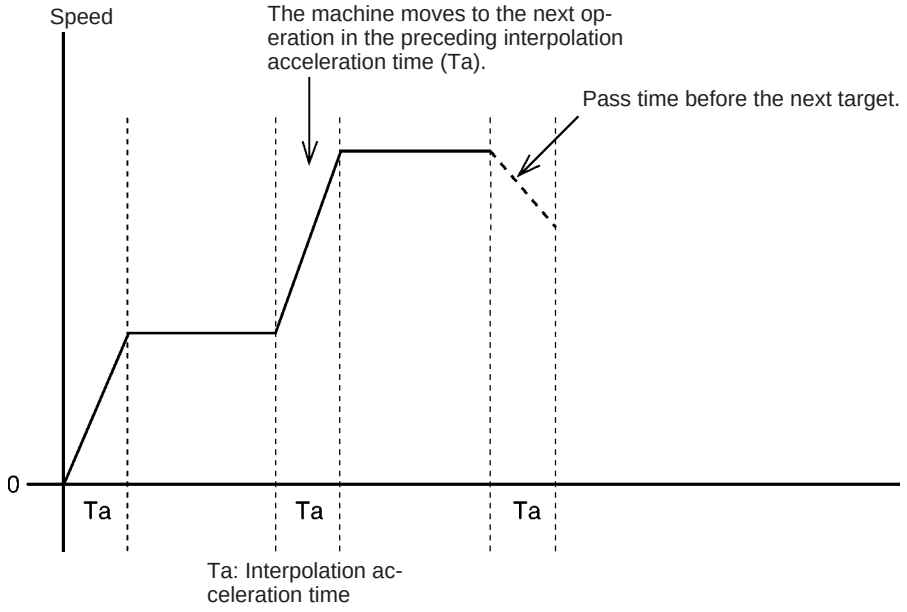

Deceleration Time Selected

The machine moves to the next operation in the preceding interpolation deceleration time.

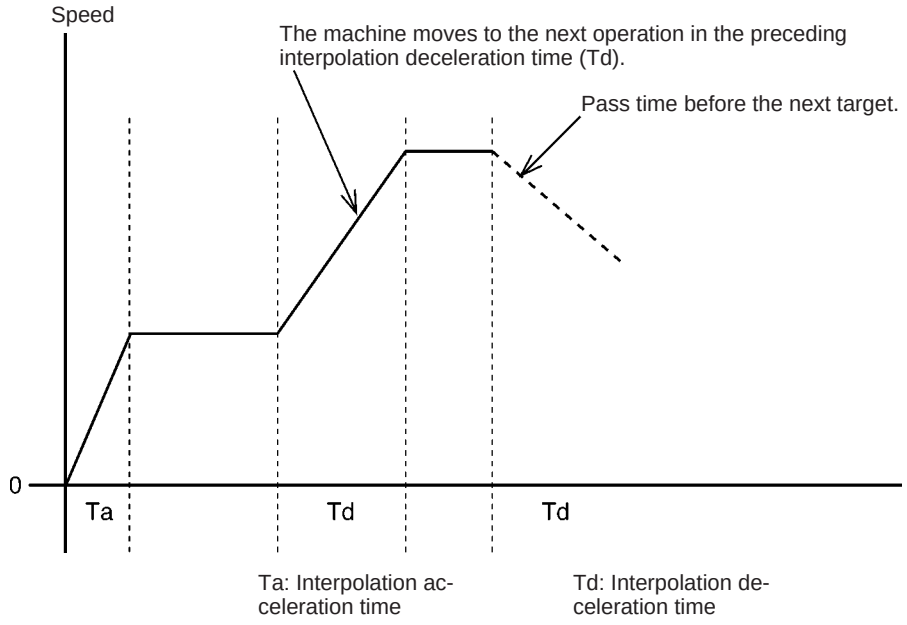

Acceleration Mode

The Acceleration Mode sets whether to use fixed acceleration or not during acceleration or to use pass operation with linear interpolation for just one axis. This mode has priority regardless of the Pass Mode selection.

The following diagram shows what happens when the interpolation feed rate is reached at a constant acceleration (fixed acceleration) when Acceleration Mode is set to ON.

Ti = Ta x Vi/Vmax
Tj = Ta x (Vmax – Vi)/Vmax

Ta: Interpolation acceleration time (feed rate parameter)

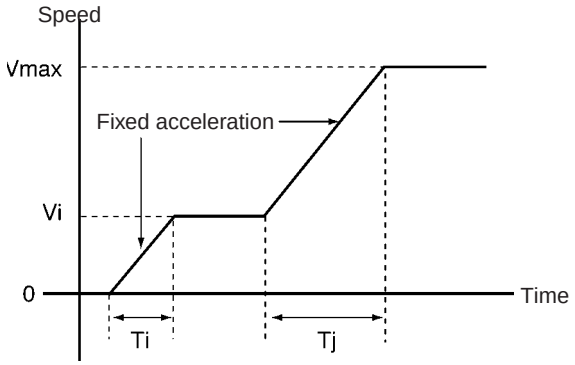

Refer to *6-8 Operating Modes* for more details. The default setting is Acceleration Mode OFF.

Teaching Box Language The default setting for Teaching Box messages is English.

Autoload Timeout The autoload timeout setting specifies the monitoring time for downloading data between CX-Motion and the MC Unit during automatic loading. An error will be generated if communications has not restarted after the timeout time has elapsed and the automatic loading error flag will be turned ON. In this case, the data that is being transferred will be deleted. Refer to *6-16 Automatic Loading* for more details. The default setting is 0.

Memory Management Parameter

Refer to *Unit Parameters* on page 171 for details on the setting window on CX-Motion. The window is used to set position data numerically for each task. An MC program can use a total of 2,000 position data addresses (A0000 to A1999).

Position data addresses are from 0000 to 1999 with position data start and end addresses set for each task. These parameters are then used when teaching. They are used to prevent teaching data from being incorrectly taught when two or more tasks are involved.

The default setting for all tasks is 0000 to 1999. When position data is obtained by teaching, the data is stored from the first address set here.

Machine Parameters

The CS1W-MC421 setting window for CX-Motion is shown below.

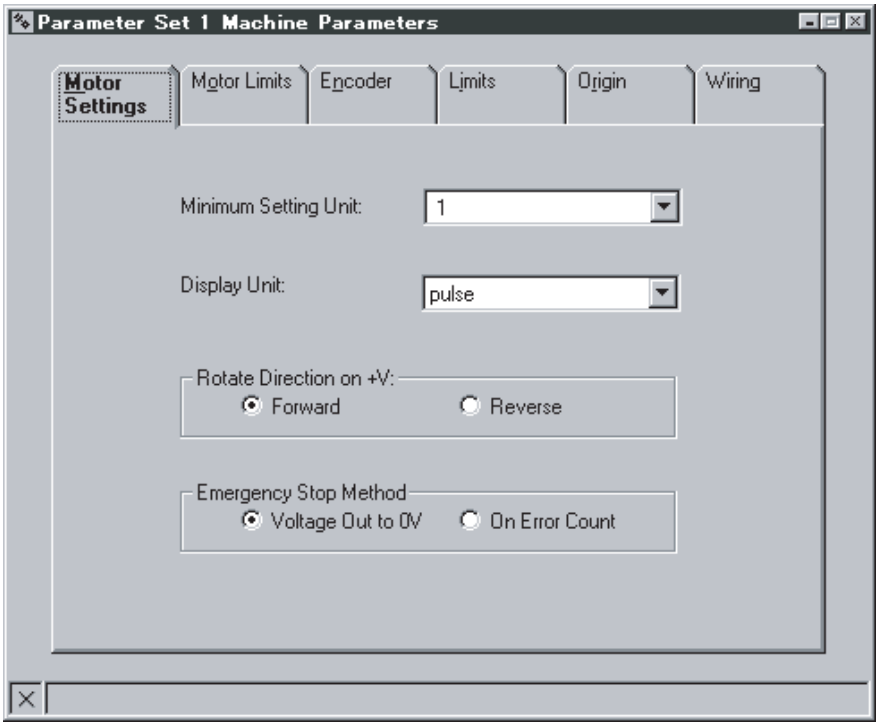

Minimum Setting Unit

The MC Unit can manipulate position data ranging from –39,999,999 to +39,999,999 when the minimum setting unit is set to 1 (the default setting). The minimum setting unit can be set to 0.1, 0.01, 0.001, or 0.0001 to provide greater precision but a more limited range, as shown in the following table.

Min. setting unit	Range
1	–39,999,999 to +39,999,999
0.1	–3,999,999.9 to +3,999,999.9
0.01	–399,999.99 to +399,999.99
0.001	–39,999.999 to +39,999.999
0.0001	–3,999.9999 to +3,999.9999

Depending on the pulse rate, the range of command values might be smaller than the range shown in the table above. Set the maximum command values based on the following two conditions.

- |Max. command value (C)| ≤ 1073741823 × P
- |Max. command value (C)| £ 39999999(C)

P: Pulse rate ([pulses/pulse], [mm/pulse], [degrees/pulse], [inches/pulse])

C: Minimum setting unit (0.1, 0.01, 0.001, or 0.0001)

For example, when the minimum setting unit is 0.01 and the pulse rate is 0.0001:

$$1073741823 \times 0.0001 = 107{,}374.1823 < 399{,}999.99$$

Since the minimum setting unit is 0.01, the command value range is –107,374.18 to +107,374.18.

The possible setting ranges of the following parameters depends on the setting of the minimum setting unit.

Menu	Parameter
Machine Parameter Edit	Negative software limit
	Positive software limit
Coordinate Parameter Edit	Reference origin offset
	Workpiece origin offset
Feed Rate Parameter Edit	Maximum feed rate
	Max. interpolation feed rate
	High-speed origin search feed rate
	Low-speed origin search feed rate
	Maximum jog feed rate
Zone Parameter Edit	Zone negative SV
	Zone positive SV

Axis Mode/Display Unit

Refer to the Data Configuration for System Parameters and *6-20 Unlimited Feeding* for details on these settings. These parameters determine the unit that will be used when monitoring the present values. While each axis is controlled by pulses in the MC Unit, the present value is monitored in units that will display on the peripheral device.

The units available are mm, inches, degrees, and pulses, and the default setting is pulses. When a setting other than pulses is used, change the pulse range to match the units used for the pulse rate parameter. The units for the following parameters will change when the display unit setting is changed.

Menu	Parameter
Machine Parameter Edit	Pulse rate, software limits
Coordinate Parameter Edit	Coordinate system origin offsets
Feed Rate Parameter Edit	All feed rates
Zone Parameter Edit	Zone settings

Axis Mode

There are two axis modes: Normal Feed Mode and Unlimited Feed Mode.

- Normal Feed Mode

  Enables positioning within the software limits after the origin has been established.

- Unlimited Feed Mode

  Enables positioning even if the origin has not been established. The software limits are not used in this mode. and the present position will be indicated between the negative software limit and the positive software limit minus the minimum setting unit.

  For example, if the minimum setting unit is 0.1, the negative software limit is 0 and the positive software limit is 360, the present position will be indicated between 0 and 359.9.

  Refer to *6-20 Unlimited Feeding* for details.

The default setting is for the Normal Mode.

Rotate Direction

This parameter specifies if forward operation is to be performed or if reverse operation is to be performed for positive positioning commands (positive voltages). Use this parameter in combination with the encoder polarity parameter. These parameters can be used to correct wiring mistakes between the MC Unit and servo driver (encoder wiring or speed reference wiring reversed) or to change directions without changing the actual connections.

The default setting is for forward operation for positive voltages.

Emergency/Limit Input Stop Method

This parameter determines how the servomotor will be stopped when an emergency stop input signal or CW/CCW limit input signal is received. There are two stop methods: Instantly dropping the voltage output to 0 V and stopping using accumulated pulses in the error counter. The MC Unit is equipped with emergency stop, CW limit, and CCW limit external inputs for each axis.

Instantly Dropping Voltage Output to 0 V:
When the emergency stop or CW/CCW limit input signal turns OFF, the RUN command output will turn OFF (servo unlock) using the timing shown in the following figure.

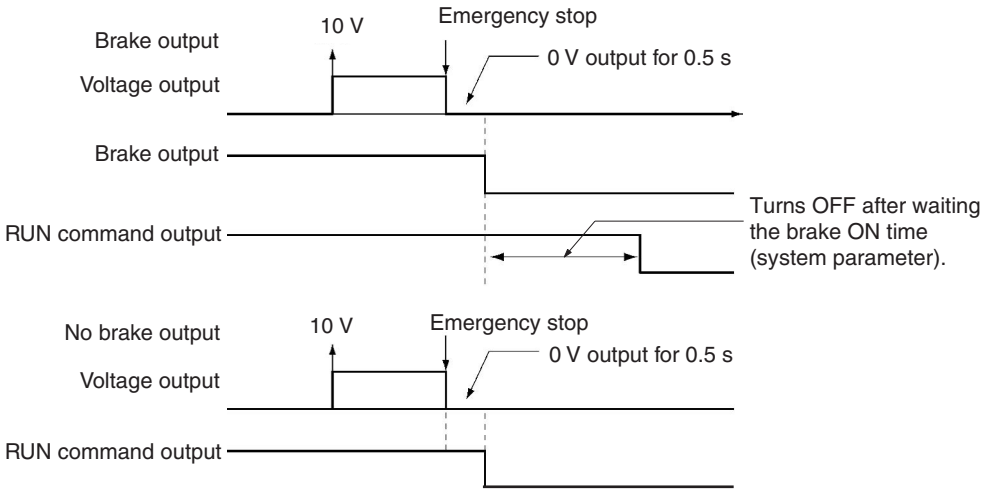

Stop using accumulated pulses: When the emergency stop input signal or CW/CCW limit input signal goes OFF, the motor will be stopped with the servo locked after error counter pulses are deleted until there are no pulses remaining.

The default setting is to instantly drop the voltage output to 0 V.

Changes Made to the Driver Alarm Input Stop Method

The method used to stop the servomotor when an error occurs at the servo driver and a driver alarm input error (error code: 003C) is generated, has been changed in the following way. The change is effective for models with -E9 at the end of the lot number, and for models with lot numbers 991118 or later.

Specifications before Change

After the driver alarm input signal is received, brake output and RUN command output are turned OFF with the following timing. Brake output and RUN command output will also be turned OFF when other errors that result in an emergency stop are generated.

Note When using models with the previous specifications, take appropriate countermeasures against dropping in the vertical axis.

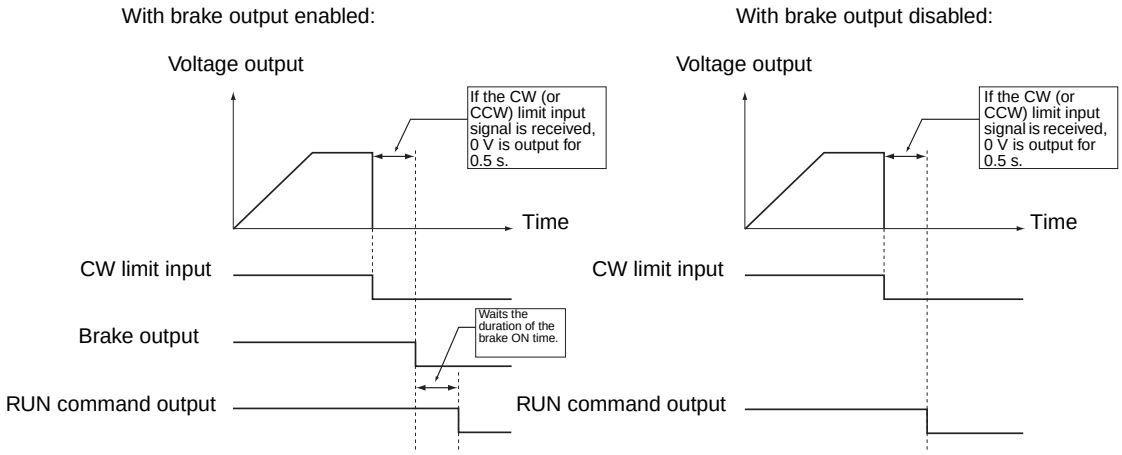

Specifications after Change

Brake output and RUN command output are turned OFF when the driver alarm input signal is received. (Operation when other errors that result in an emergency stop are generated will be the same as for previous models.)

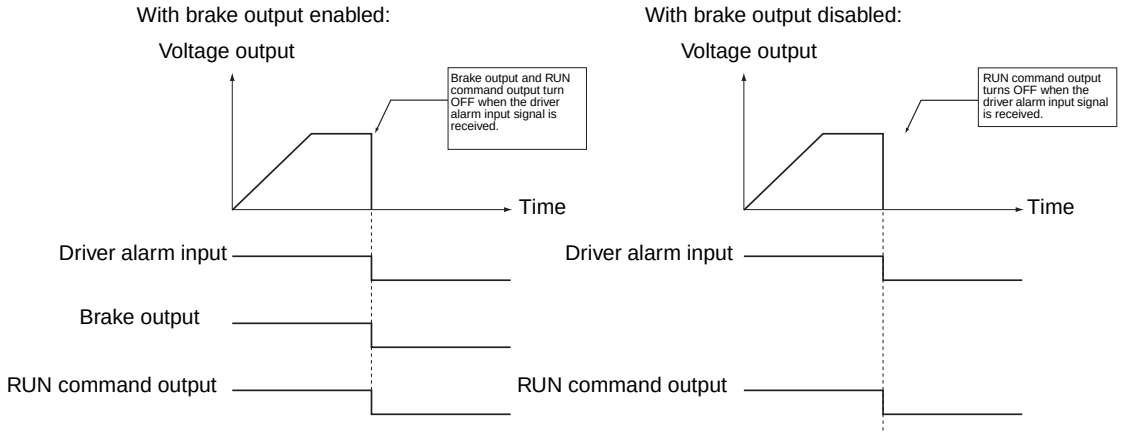

Encoder ABS/INC

This parameter specifies whether the encoder being used is an absolute or incremental encoder. Set the parameter to “Absolute encoder for U or W series” when using an absolute encoder with a U-series Servo Driver.

Encoder Resolution

This parameter sets the encoder resolution. Encoder resolution is the number of pulses (encoder frequency dividing ratio) that can be output per encoder revolution. It can be set from 1 to 65,535 and the default setting is 1,000 pr. Make sure the resolution satisfies the following condition.

Upper limit of max. motor speed [r/min] ≤ 500 [kp/s] x 60 ÷ encoder resolution [p/r]

If the resolution does not satisfy the above condition, reduce the resolution from parameters at the servo driver or reduce the maximum number of motor revolutions.

When using a G-series Servo Driver, set the encoder resolution to the same value as Pn44 (Encoder Divider Numerator Setting), and set Pn45 (Encoder Divider Denominator Setting) to 0.

Encoder Ratio

This parameters specifies the encoder ratio (4, 2 or 1). The default setting is a ratio of 4.

Encoder Polarity

This parameter specifies whether the motor will turn forward or reverse when the feedback pulses from the encoder increase. The default setting is “forward on increase.”

Pulse Rate

This parameter determines the amount that the workpiece is moved per feedback pulse.

The pulse rate is given by the following equation if Y feedback pulses are output from the encoder when the servo motor moves the work X mm.

$$\text{Pulse rate} = \frac{\text{X (mm)}}{\text{Y (pulses)} \times 4}$$ ← With an encoder ratio of 4

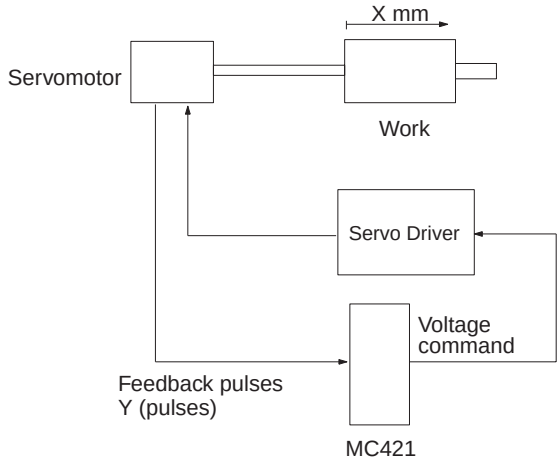

The pulse rates are set independently for the X and Y axes. Each can be set from 1 to 100,000. The default setting is 1. Set the X and Y pulse rates so that the X/Y ratio doesn’t exceed 1.

$1/100{,}000 \leq X/Y \text{ (pulse rate)} \leq 1$

The input ranges for the following parameters will change when the pulse rate setting is changed.

Menu	Parameter
Machine Parameter Edit	Software limits
Coordinate Parameter Edit	Coordinate system origin offsets
Feed Rate Parameter Edit	All feed rates
Zone Parameter Edit	Zone settings

Maximum Number of Motor Revolutions

This parameter sets the number of times that the servomotor will revolve in one minute at a speed reference voltage of 10 V. The setting range is 1 to 32,767, the default setting is 3,000 r/min and the maximum number of motor revolutions set with this parameter corresponds to the 10 [V] speed reference voltage output from the MC Unit. Make sure the maximum number of motor revolutions setting satisfies the following conditions.

Upper maximum motor revolution limit [r/min] =
500 [kp/s] x 60 ÷ encoder resolution [p/r]

If the number of revolutions does not satisfy the preceding conditions, reduce the resolution from parameters at the servo driver or reduce the maximum number of motor revolutions.

Positive (+) and Negative (–) Software Limits

These parameters set the positive and negative limits monitored by the software. The unit is the unit set for the display unit parameter within a range determined by the minimum setting unit parameter. The default range is

between –39,999,999 and +39,999,999 pulses. Set the limits so that 0 is included when performing origin searches. If the Axis Mode is set to the Unlimited Feed Mode, then these two parameters will indicate the present position display range. Refer to *6-20 Unlimited Feeding* for more details.

Origin Search Methods

Refer to *SECTION 9 Establishing the Origin* for more details on origin searches. Select one of the following operating methods (modes) for the origin search.

Mode	Description
Set origin at power ON	The position of the motor when power is turned ON is automatically defined as the origin.
Reverse Mode	The motor is reversed if a limit input signal goes ON before the origin proximity input signal is received.
1 direction Mode	The origin search is performed in the direction set by the origin search direction parameter. An error will occur if a limit input signal goes ON before the origin proximity input signal is received.

The default setting is Reverse Mode.

Phase Z Detection Direction

This parameter sets the Phase Z detection direction during origin searches. Refer to *SECTION 9 Establishing the Origin* for more details.
The default setting is the positive (+) direction.

Origin Search Start Direction

This parameter sets the start direction for origin searches. It specifies the same direction as phase Z detection or the opposite direction of phase Z detection. Refer to *SECTION 9 Establishing the Origin* for more details.
The default setting is the same direction as phase Z detection.

Origin Deceleration Method

This parameter sets the input signal(s) used to switch from high-speed to low-speed origin search when a search is executed. It also selects whether to use the origin proximity input signal or to use the limit input signal as the original proximity input signal.
The default setting is to use the origin proximity input signal. If the origin proximity input signal is not used, select use the limit input signal as the origin proximity input so the limit input signal will be used as the origin proximity input.

CW/CCW Deceleration Method

This parameter sets the deceleration method used if a limit input signal is detected when an origin search is executed.
It specifies using pulses accumulated in the error counter to stop or decelerate to a stop as the deceleration method used when an limit input signal is detected. The following figure shows that speed will change dramatically in reverse if error counter is used to stop. Refer to *SECTION 9 Establishing the Origin* for more details.

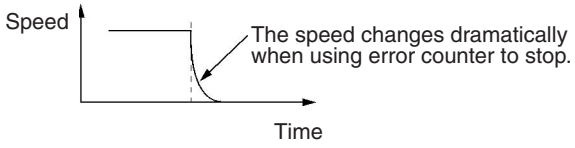

The default setting is to use the error counter.

Origin Proximity Logic

This parameter specifies whether the original proximity input signal is normally open or normally closed and it must be set when the origin proximity input signal is used. The default setting is normally open.

Wiring Check ON/OFF

This parameter specifies whether a wiring check is to be performed when the servo is locked initially after the power is turned ON. The wiring check function outputs a predetermined number of pulses in a predetermined direction and checks whether the correct number of feedback pulses is received. The default setting is ON.

See *2-3-10 Wiring Check Function* and *2-5 Wiring Check Troubleshooting* for more details.

Wiring Check Time This parameter checks the feedback pulses if check pulses are not returned within the time set here. The setting range is from 0 to 99 and the time is 10 times (x 10 ms) the set value. The default setting is 10 (100 ms).

Wiring Check Pulses This parameter specifies the number of check pulses output in a wiring check. The setting range is from 0 to 999 and the default setting is 50 pulses.

Absolute Position Setting This parameter specifies the correction value for the absolute encoder used when the absolute origin setting is used. It can only be monitored from the CX-Motion and cannot be monitored from the Teaching Box.

Coordinate Parameters

The CS1W-MC421 setting window from CX-Motion is shown below.

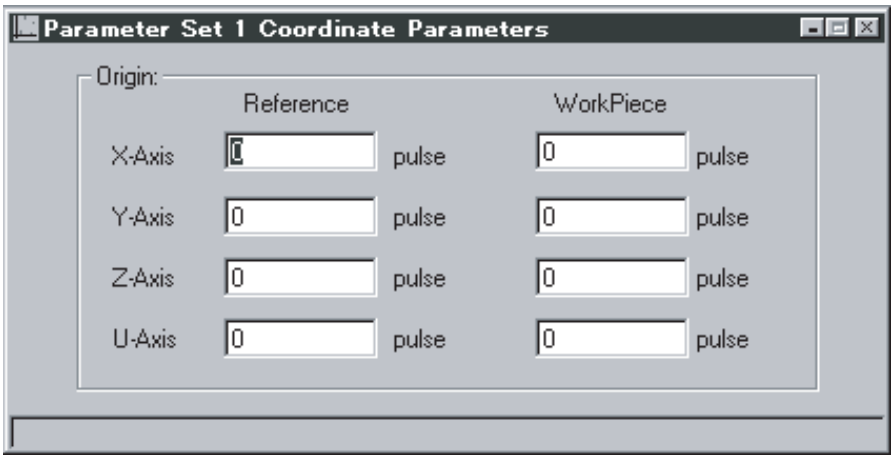

Reference Origin Offset A reference origin offset is an offset from the mechanical origin. It is used in origin searches as shown in the following figure.

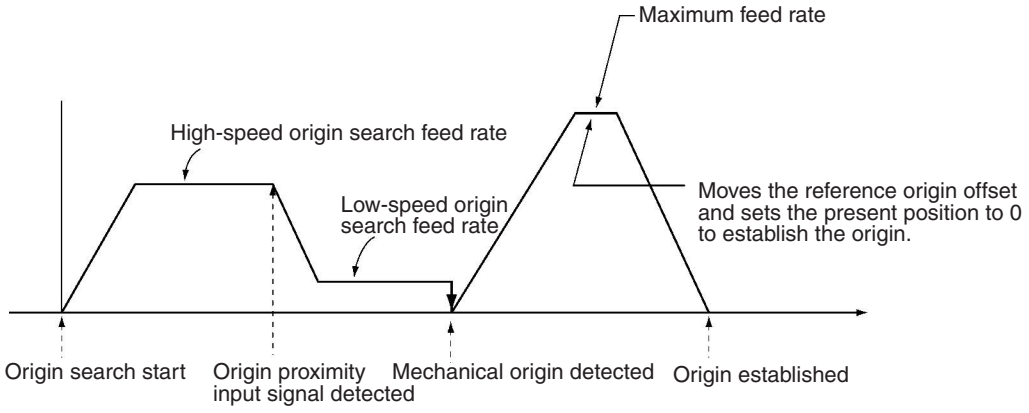

The setting range will vary with the minimum setting unit and pulse rate in the machine parameters.

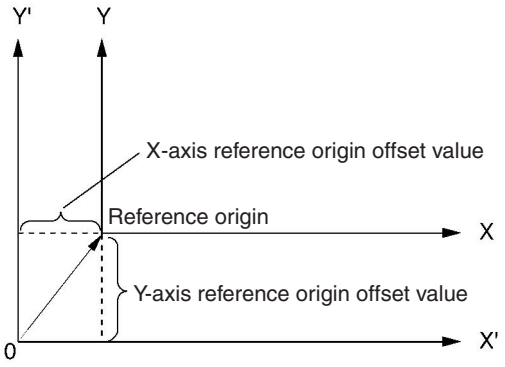

This parameter is set when you want to move the origin after the mechanical origin has been found.

Workpiece Origin Offset Values

The workpiece origin offset is an offset from the reference origin. The workpiece origin offset values are referenced when G51 (SELECT WORKPIECE COORDINATE SYSTEM) is executed in the G-language program.

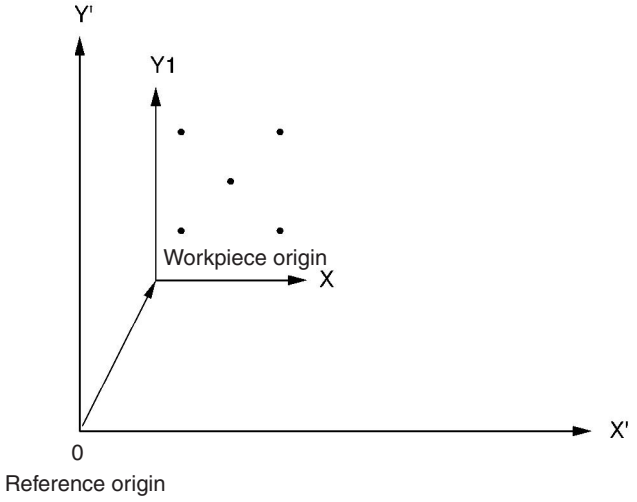

This can be useful, for example, in carrying out operations such as drilling holes in the positions shown above.

Move the workpiece origin to the workpiece origin position by changing the workpiece origin offset value. Carry out the positioning for drilling the holes by selecting the workpiece coordinate system.

The origin can be changed temporarily using G53 (change workpiece origin offset) in the G language program.

Feed Rate Parameters

The CS1W-MC421 setting window for CX-Motion is shown below.

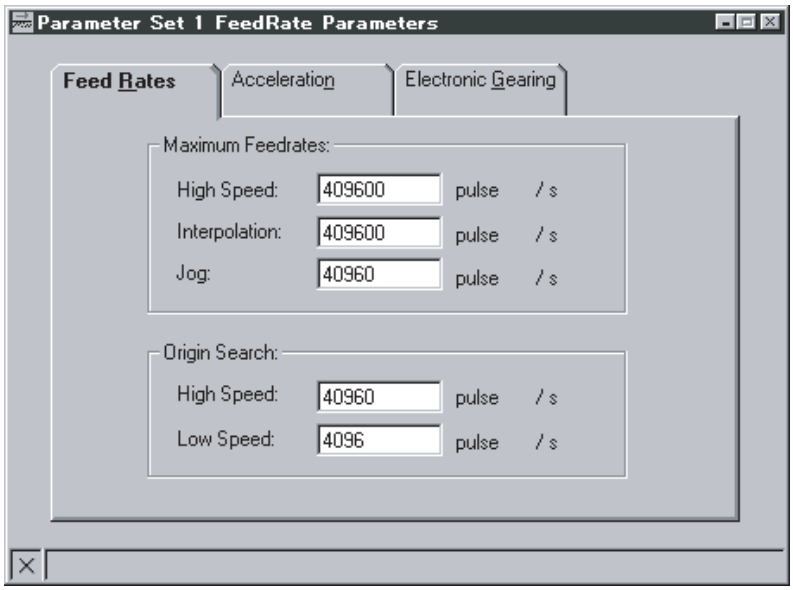

Note Feed Rate Setting Ranges

The following equation provides possible ranges for high-speed feed rates as well as high- and low-speed feed rates for origin searches.

$$1 \leq SV \leq Vm \times Ep \times Et \times \frac{Pr}{60}$$

Vm: Max. motor frequency
Ep: Encoder resolution
Et: Encoder ratio
Pr: Pulse rate

For example, the equation yields the following at a Vm: 1,000 [r/min], Ep: 300 [pulses/r], Pr: 0.01 [mm/pulse] and Er: ratio of 4.

1000 [r/min] × 300 [ppr] × 4 × 0.01 [mm/pulse] ÷ 60 = 200 [mm/s]

Therefore, the setting range would be 1 to 200. When the minimum setting unit is 0.01, the possible setting range would be 0.01 to 200.00.

In the example above, the display unit is mm. The SV unit would be pulses/s if the display units were pulses.

Feed Rate Relationships

If the following conditions aren't met, an error will occur when the parameters are transferred from the CX-Motion.

Max. feed rate ≥ Maximum interpolation feed rate
Max. feed rate ≥ Maximum jog feed rate
Max. feed rate ≥ Origin search high-speed feed rate
Max. feed rate ≥ Origin search low-speed feed rate
Origin search high-speed feed rate ≥ Origin search low-speed feed rate

Maximum Feed Rate/Maximum Interpolation Feed Rate/Maximum Jog Feed Rate

These parameters set the maximum feed rate for PTP operation, interpolation operation, and jogging. Refer to *Feed Rate Setting Ranges* for more details on possible ranges. Each axis used must be set individually.

High- and Low-speed Origin Search Feed Rates

These parameters set the high- and low-speed feed rates for origin searches. The high-speed feed rate is the feed rate at which the axis is moved until the origin proximity input signal is detected during an origin search. The origin search low-speed feed rate is used after the origin proximity input signal is received until phase Z is detected.

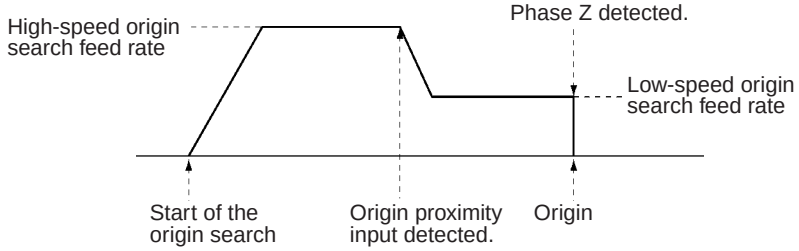

In an origin search, the Unit accelerates to the origin search high-speed feed rate and searches for the origin proximity input signal. When the origin proximity input signal is found, the Unit decelerates to the origin search low-speed feed rate and searches for phase Z. Settings must be made for each axis.

Refer to *Feed Rate Setting Ranges* for more details on possible ranges.

Acceleration/Deceleration Curve

A trapezoidal curve or an S-curve can be selected. The default setting is for a trapezoidal curve. The accelerations for these curves are shown below.

Trapezoidal Curve

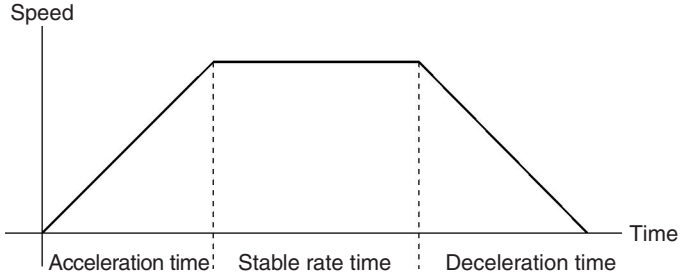

S-curve

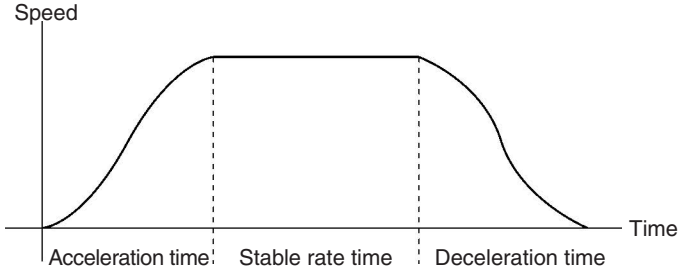

Note The S-curve is achieved using a trinomial function.

Acceleration, Deceleration, Interpolation Acceleration and Interpolation Deceleration Times

These parameters set the acceleration, deceleration, interpolation acceleration and interpolation deceleration times. The acceleration and interpolation acceleration times specify the time required to reach the maximum feed rate.

The deceleration and interpolation deceleration times specify the time required to decelerate from the maximum speed to zero.

Set these parameters for each axis used. The setting range is from 0 to 10,000 in 2-ms units.

MPG Ratio (1 to 4)/ Electronic Gear (1 to 4)

These parameters set the ratio per pulse when using an MPG or sync encoder. The ratio setting is extremely accurate because the numerator and denominator can be set separately. A maximum of four ratios can be set for each axis.

The following setting ranges are possible.

Numerator: –10,000 to 10,000

Denominator: 1 to 10,000

$0.0001 \leq |\text{numerator/denominator}| \leq 10{,}000$

Zone Parameters

The CS1W-MC421 setting window for the CX-Motion is shown below.

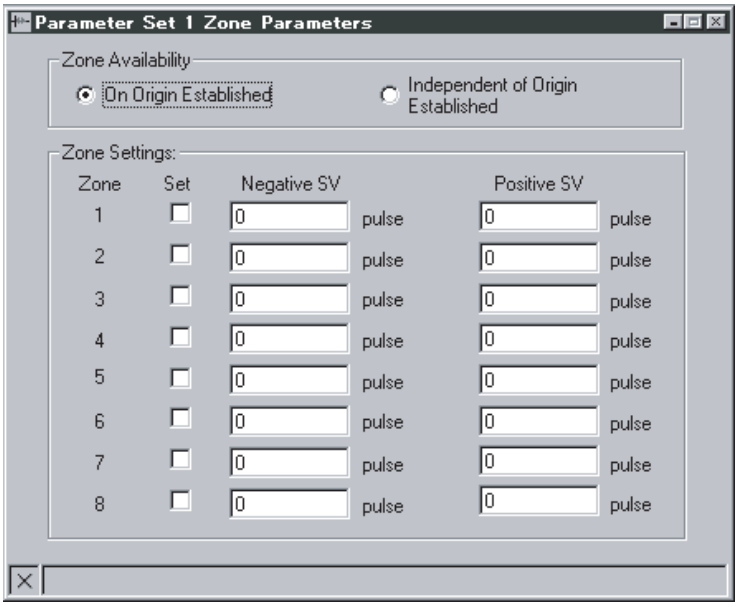

Setting Zones

These parameters set the timing that will make the zone setting valid and set whether zones 1 to 8 settings will be used.

Select the timing to one of the following: After the origin is established or always (regardless of whether or not the origin has been established. The default setting is after the origin is established.

Set the zone ranges after selecting ***Set*** for the zone.

Positive (+) and Negative (–) Zone Settings

When the present value is within the range set here, the zone flags for zones 1 to 8 will turn ON in the PLC interface area.

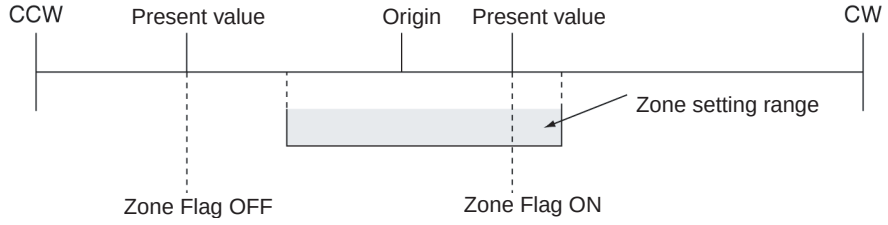

The following table shows zone flag allocations.

Word		Axis	Bits	Bit names
MC221	MC421			
n+22	n+38	X axis	08 to 15	Zone 1 Flag (bit 08) to Zone 8 Flag (bit 15)
n+25	n+41	Y axis		
---	n+44	Z axis		
---	n+47	U axis		

The zone ranges that can be set depend on the machine parameter minimum setting unit and pulse rate.

Servo Parameters

The CS1W-MC421 setting window for CX-Motion is shown below.

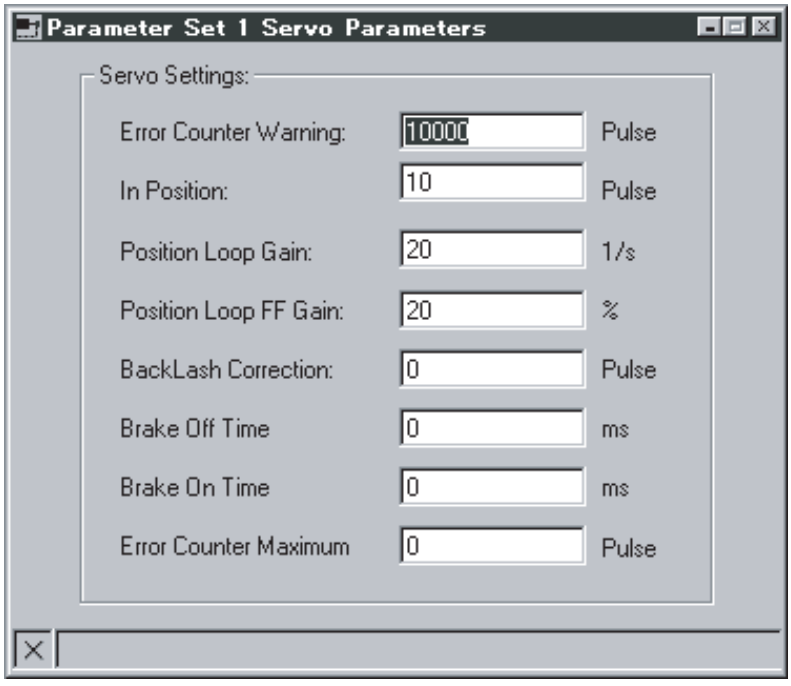

Error Counter Warning

This parameter sets the number of pulses used to monitor accumulated pulses in the error counter.

The Error Counter Function Selection (bit 07 of word n) can be used to set either error counter error detection (default setting) or an error counter warning. If error detection is set and the number of pulses in the error counter exceeds the warning value, an error counter overflow error will occur and the servo will be turned OFF. If the alarm function is set, the Error Counter Warning Flag will be turned ON instead.

Generally set the error warning counter about 20% above the level of pulses that accumulate during normal operation and adjust to the proper setting for the mechanical system. When a problem occurs in the mechanical system or motor, the accumulated pulses in the error counter will exceed the set value so the error can be detected.

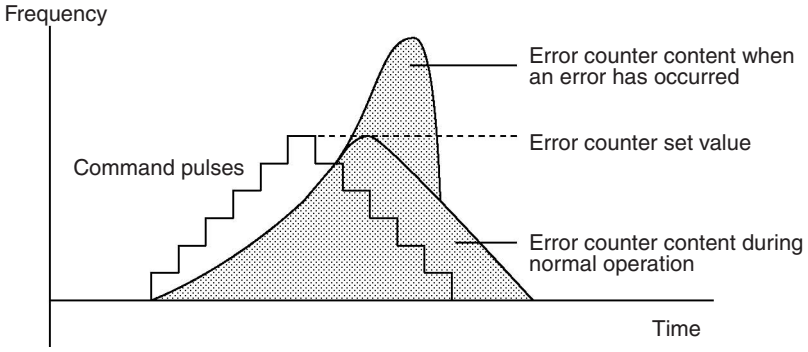

Word		Axis	Bit	Bit name
MC221	MC421			
n+22	n+38	X axis	06	Error Counter Warning Flag
n+25	n+41	Y axis		
---	n+44	Z axis		
---	n+47	U axis		
n		All	07	Error counter function selection

Set this parameter for each axis being used. The setting range is 0 to 65,000 and the default setting is 10,000.

In Position

When positioning an axis, the Positioning Completed Flag in the PLC interface area is turned ON when the pulse distribution is completed and the axis is in position.

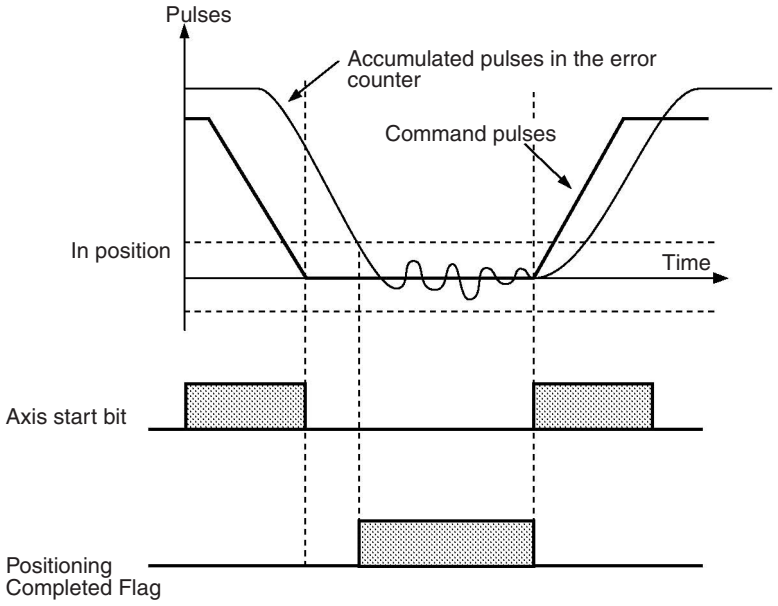

The following table shows axis start bit and Positioning Completed Flag allocation.

Word		Axis	Bit names
MC221	MC421		
n+22	n+38	X axis	Axis Start Bit (bit 04) Positioning Completed Flag (bit 05)
n+25	n+41	Y axis	
---	n+44	Z axis	
---	n+47	U axis	

Adjust so the axis is in the in-position range when positioning is completed.

The setting range is 0 to 10,000 and the default setting is 10 pulses.

Be sure that the in-position zone is entered when positioning has been completed.

Position Loop Gain

Sets the position loop gain, which can be determined from the following equation.

$$\text{Position loop gain } [1/s] = \frac{\text{Feed rate } [\text{pulses}/\text{sec}]}{\text{Accumulated pulses } [\text{pulses}]}$$

If the position loop gain is too low, motor response will deteriorate because there will be too many accumulated pulses. If the position loop gain is too high, oscillation and noise might occur. In general, the setting should be 50 to 70 (1/s) for NC machine tools, 30 to 50 (1/s) for multi-purpose machines and assembly machines, and 10 to 30 (1/s) for industrial robots.

The setting range is 1 to 250 and the default setting is 40 (1/s).

Position Loop FF Gain

Sets the position loop FF (feed-forward) gain. The setting range is 0 to 100 (%), and the default setting is 0 (%).

The position loop FF gain process the speed reference pulses and reduces the positioning time by adding directly to the command voltage.

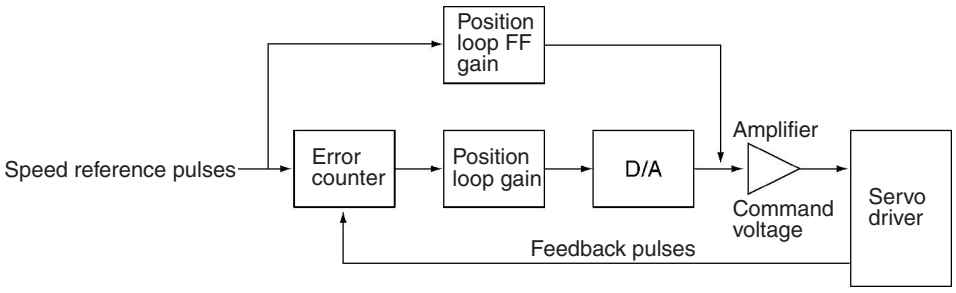

The following diagram shows the relationship between the position loop FF gain and the speed reference pulses.

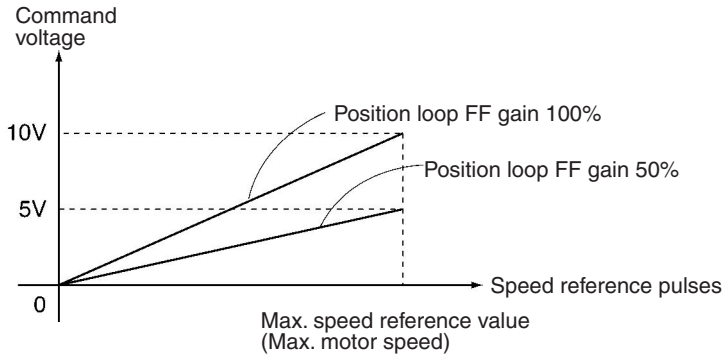

Backlash Correction

This parameter sets backlash correction for the mechanical system. The setting range is 0 to 10,000 pulses and the default setting is 0 pulses. Refer to *6-15 Backlash Correction* for more details.

Brake ON/OFF Time

This parameter sets the brake ON/OFF time. The setting range is 0 to 10,000 ms and the default setting is 0 ms. Refer to the brake manual and adjust the proper time for the system.

Refer to *Servo Lock* (page 241) and *Servo Unlock* (page 241) in *5-3 PLC Interface Area* and *6-14 Servo Lock and Unlock*.

3-4 Position Data

There are 2,000 positions that can be used. An axis is positioned by specifying the position directly in a G-language program or it is positioned by specifying a position in the position data (specifying indirectly). Position data is transferred to and from an MC Unit by writing a specific transfer command in the command area (addresses 6102/6103) using CX-Motion, IOWR/IORD instructions or IOWR instructions.

3-4-1 Position Data Addresses

Specify position data at the following addresses in MC Unit memory. Specify the addresses in hexadecimal when using IOWR/IORD commands.

Data	Address range	Number of words to transfer
Position data	0000 to 07CF (decimal: 0000 to 1999)	1 position: 0003 hex 2 positions: 0006 hex 3 positions: 0009 hex 4 positions: 000C hex

The preceding addresses 0000 to 1999 are specified using A0000 to A1999 in G language.

3-4-2 Position Data Configuration

Each position is comprised of three words. Refer to *SECTION 4 Data Transfer and Storage* for more details about transferring data. Data can be transferred at any time.

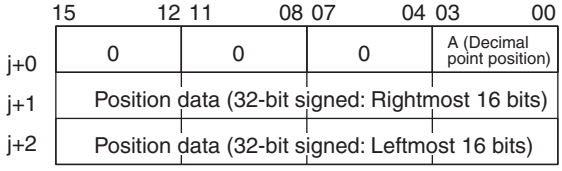

A: Decimal point position 0: x 1
1: x 0.1
2: x 0.01
3: x 0.001
4: x 0.0001

Example 1

The following is the configuration of a position data value of 123.45.

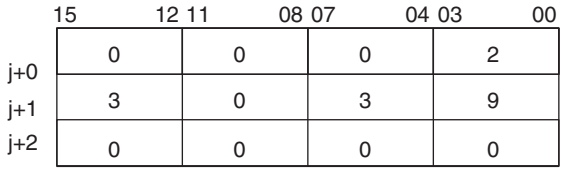

00003039 (Hex) = 12345 (decimal)

The decimal point position is 2, so it yields 123.45.

Example 2

The following is the configuration of a position data value of 12345.

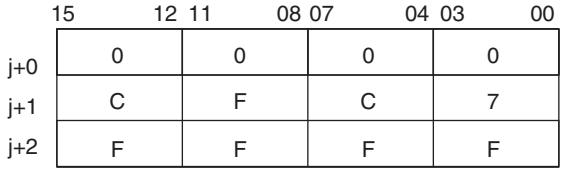

3-5 Monitor Data

Monitor data consists of error codes for errors generated in the MC Unit, numbers for tasks executing programs, numbers for executing blocks, ON/OFF status for all I/O signals to the MC Unit, present positions, and other data that can be monitored. All data can be read from an MC Unit using IORD instructions. The CX-Motion and Teaching Box can be used to read some, but not all, of the data.

3-5-1 Monitor Data Addresses

Specify monitor data at the following addresses in MC Unit memory. Specify the addresses in hexadecimal when using IORD instructions. Numbers in parentheses () are decimal addresses. When transferring monitor data, the number of words to transfer is 0002 hex.

Monitor data		Address	CX-Motion	T Box
Error codes	System error code	1770 hex (6000)	❍	❍
	Task 1 error code	1771 hex (6001)	❍	❍
	Task 2 error code	1772 hex (6002)	❍	❍
	Task 3 error code	1773 hex (6003)	❍	❍
	Task 4 error code	1774 hex (6004)	❍	❍
	X-axis error code	1775 hex (6005)	❍	❍
	Y-axis error code	1776 hex (6006)	❍	❍
	X-axis error code	1777 hex (6007)	❍	❍
	U-axis error code	1778 hex (6008)	❍	❍
I/O monitoring	I/O monitor data (X/Y)	177B hex (6011)	❍	❍
	I/O monitor data (Z/U)	177C hex (6012)	❍	❍
Task 1 status	Executing program number	1784 hex (6020)	❍	×
	Executing block number	1785 hex (6021)	❍	×
	Teaching execution address	1786 hex (6022)	×	×
Task 2 status	Executing program number	1788 hex (6024)	❍	×
	Executing block number	1789 hex (6025)	❍	×
	Teaching execution address	178A hex (6026)	×	×
Task 3 status	Executing program number	178C hex (6028)	❍	×
	Executing block number	178D hex (6029)	❍	×
	Teaching execution address	178E hex (6030)	×	×
Task 4 status	Executing program number	1790 hex (6032)	❍	×
	Executing block number	1791 hex (6033)	❍	×
	Teaching execution address	1792 hex (6034)	×	×

Monitor data		Address	CX-Motion	T Box
Reference coordinate system present position (See note.)	X axis	17A2 hex (6050)	❍	❍
	Y axis	17A3 hex (6051)	❍	❍
	Z axis	17A4 hex (6052)	❍	❍
	U axis	17A5 hex (6053)	❍	❍
Workpiece coordinate system present position	X axis	17A6 hex (6054)	❍	×
	Y axis	17A7 hex (6055)	❍	×
	Z axis	17A8 hex (6056)	❍	×
	U axis	17A9 hex (6057)	❍	×
Reference coordinate system present position in pulses	X axis	17AA hex (6058)	❍	❍
	Y axis	17AB hex (6059)	❍	❍
	Z axis	17AC hex (6060)	❍	❍
	U axis	17AD hex (6061)	❍	❍
Error counter value in pulses	X axis	17AE hex (6062)	❍	❍
	Y axis	17AF hex (6063)	❍	❍
	Z axis	17B0 hex (6064)	❍	❍
	U axis	17B1 hex (6065)	❍	❍
Workpiece origin shift value	X axis	17B2 hex (6066)	❍	×
	Y axis	17B3 hex (6067)	❍	×
	Z axis	17B4 hex (6068)	❍	×
	U axis	17B5 hex (6069)	❍	×
Phase Z margin in pulses	X axis	17B6 hex (6070)	×	❍
	Y axis	17B7 hex (6071)	×	❍
	Z axis	17B8 hex (6072)	×	❍
	U axis	17B9 hex (6073)	×	❍
Reference coordinate system present position in pulses (See note.)	X axis	17BA hex (6074)	×	×
	Y axis	17BB hex (6075)	×	×
	Z axis	17BC hex (6076)	×	×
	U axis	17BD hex (6077)	×	×
Number of multiple turns	X axis	17BE hex (6078)	×	×
	Y axis	17BF hex (6079)	×	×
	Z axis	17C0 hex (6080)	×	×
	U axis	17C1 hex (6081)	×	×

❍: Supported; ×: Not supported

Note The data range for addresses 6058 to 6061 is –39,999,999 to 39,999,999. It is provided so that C200H-MC221 addresses can be accessed. Use addresses 6074 to 6077 to set values outside of this range, e.g. to set the pulse rate to 1/100.

3-5-2 Monitor Data Configuration

Monitor data is all read-only. The CS1W-MC221 has only X and Y axes and tasks 1 and 2. In the address column, the top numbers are hexadecimal values and the bottom numbers in parenthesis () are decimal values.

Address		R/W	Name	Description
MC221	MC421			
1770 (6000)	1770 (6000)	R	System error code	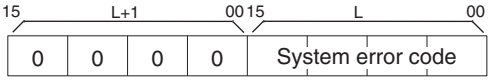 An error code will be set if a system error occurs. Refer to *SECTION 12 Troubleshooting* for more details on errors. The address is set to 0000 Hex when the system is normal.
1771 (6001)	1771 (6001)	R	Task 1 error code	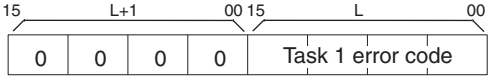 An error code will be set if a task 1 error occur. Refer to *SECTION 12 Troubleshooting* for more details on errors. If an axis error occurs for the axis being controlled by task1, an axis error code will be set, but the task 1 error code in this area will remain at 0000. The error code is set to 0000 Hex when the system is normal.
1772 (6002)	1772 (6002)	R	Task 2 error code	Outputs task 2 error codes. The data configuration is the same as that for task 1.
---	1773 (6003)	R	Task 3 error code	Outputs task 3 error codes. The data configuration is the same as that for task 1.
---	1774 (6004)	R	Task 4 error code	Outputs task 4 error codes. The data configuration is the same as that for task 1.
1775 (6005)	1775 (6005)	R	X-axis error code	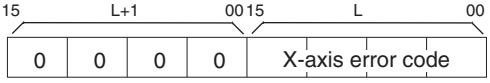 An error code will be set if an X-axis error occurs. Refer to *SECTION 12 Troubleshooting* for more details on errors. The address is set to 0000 Hex when the system is normal.
1776 (6006)	1776 (6006)	R	Y-axis error code	An error code will be set if a Y-axis error occurs. The data configuration is the same as that for the X axis.
---	1777 (6007)	R	Z-axis error code	An error code will be set if a Z-axis error occurs. The data configuration is the same as that for the X axis.
---	1778 (6008)	R	U-axis error code	An error code will be set if a U-axis error results. The data configuration is the same as that for the X axis.

<table>
<tr><th colspan="2">Address</th><th>R/W</th><th>Name</th><th>Description</th></tr>
<tr><th>MC221</th><th>MC421</th><th></th><th></th><th></th></tr>
<tr><td>177B
(6011)</td><td>177B
(6011)</td><td>R</td><td>I/O monitor data
(X/Y)</td><td>Outputs the ON or OFF status of each I/O signal of the MC Unit. Outputs the ON or OFF status of each MC Unit I/O signal on the X and Y axes.
 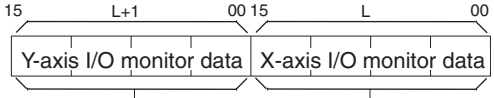

<table><tr><th>Bit</th><th></th><th>Name</th><th>Description</th></tr><tr><td>0</td><td rowspan="15">X-axis</td><td>General-purpose input 1</td><td rowspan="15">1: ON
0: OFF</td></tr><tr><td>1</td><td>General-purpose output 1</td></tr><tr><td>2 to 7</td><td>Not used (OFF)</td></tr><tr><td>8</td><td>CCW limit input signal</td></tr><tr><td>9</td><td>CW limit input signal</td></tr><tr><td>10</td><td>Origin proximity input signal</td></tr><tr><td>11</td><td>Emergency stop input signal</td></tr><tr><td>12</td><td>Driver alarm input signal</td></tr><tr><td>13</td><td>Run instruction output</td></tr><tr><td>14</td><td>Driver alarm reset output</td></tr><tr><td>15</td><td>Sensor ON output</td></tr></table>
<table><tr><th>Bit</th><th></th><th>Name</th><th>Description</th></tr><tr><td>0</td><td rowspan="15">Y-axis</td><td>General-purpose input 2</td><td rowspan="15">1: ON
0: OFF</td></tr><tr><td>1</td><td>General-purpose output 2</td></tr><tr><td>2 to 7</td><td>Not used (OFF)</td></tr><tr><td>8</td><td>CCW limit input signal</td></tr><tr><td>9</td><td>CW limit input signal</td></tr><tr><td>10</td><td>Origin proximity input signal</td></tr><tr><td>11</td><td>Emergency stop input signal</td></tr><tr><td>12</td><td>Driver alarm input signal</td></tr><tr><td>13</td><td>Run instruction output</td></tr><tr><td>14</td><td>Driver alarm reset output</td></tr><tr><td>15</td><td>Sensor ON output</td></tr></table></td></tr>
<tr><td>---</td><td>177C
(6012)</td><td>R</td><td>I/O monitor data
(Z/U)</td><td>Outputs the ON or OFF status of each MC Unit I/O signal on the Z and U axes. The data configuration is the same as that for I/O monitor data (X/Y). However, LCH bit 0 is general-purpose input 3, bit 1 is general-purpose output 3, LCH+1 bit 0 is general-purpose input 4, and bit 1 is general-purpose output 4.</td></tr>
<tr><td>1784
(6020)</td><td>1784
(6020)</td><td>R</td><td>Task 1 executing program no.</td><td> 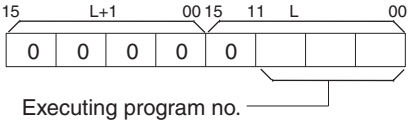

If a program is being executed, the number of the program will be output and if no program is being executed, the number of the last program executed will be output within a range of 000 to 3E7 Hex (0 to 999).</td></tr>
</table>

Address		R/W	Name	Description
MC221	MC421			
1785 (6021)	1785 (6021)	R	Task 1 executing block no.	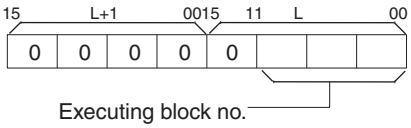 If a program is being executed, the block number of the program will be output and if no program is being executed, the block number of the last program executed will be output within a range of 000 to 3E7 Hex (0 to 999).
1786 (6022)	1786 (6022)	R	Task 1 teaching execution address	 Outputs the address where position data is stored at the time of teaching within a range of 000 to 7CF Hex (0 to 1999). The address will be refreshed whenever teaching is executed.
1788 (6024)	1788 (6024)	R	Task 2 executing program no.	Refer to corresponding task 1 data.
1789 (6025)	1789 (6025)	R	Task 2 executing block no.	
178A (6026)	178A (6026)	R	Task 2 teaching execution address	
---	178C (6028)	R	Task 3 executing program no.	Refer to corresponding task 1 data.
---	178D (6029)	R	Task 3 executing block no.	
---	178E (6030)	R	Task 3 teaching execution address	
---	1790 (6032)	R	Task 4 executing program no.	Refer to corresponding task 1 data.
---	1791 (6033)	R	Task 4 executing block no.	
---	1792 (6034)	R	Task 4 teaching execution address	
17A2 (6050)	17A2 (6050)	R	X-axis reference coordinate system present position	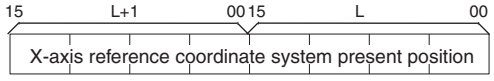 Outputs the X-axis reference coordinate system present position. The data is 32-bit signed binary data. L+1: Leftmost 16 bits, L: Rightmost 16 bits Range: FD9DA601 to 026259FF Hex (–39999999 to 39999999) The minimum setting unit is set to 2 (for 0.01), the display unit is set to 0 (for mm) and the reference origin offset is 3.99 [mm] (i.e., 399 x 0.01) if the data is 399.
17A3 (6051)	17A3 (6051)	R	Y-axis reference coordinate system present position	Outputs the Y-axis reference coordinate system present position. See X-axis reference coordinate system present position for the data configuration.
---	17A4 (6052)	R	Z-axis reference coordinate system present position	Outputs the Z-axis reference coordinate system present position. See X-axis reference coordinate system present position for the data configuration.
---	17A5 (6053)	R	U-axis reference coordinate system present position	Outputs the U-axis reference coordinate system present position. See X-axis reference coordinate system present position for the data configuration.

Address		R/W	Name	Description
MC221	MC421			
17A6 (6054)	17A6 (6054)	R	X-axis workpiece coordinate system present position	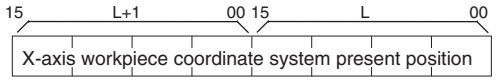 Outputs the workpiece coordinate system current position. The data is 32-bit signed binary data. L+1: Leftmost 16 bits, L: Rightmost 16 bits Range: FD9DA601 to 026259FF Hex (–39999999 to 39999999) The minimum setting unit is set to 2 (for 0.01), the display unit is set to 0 (for mm) and the reference origin offset is 3.99 [mm] (i.e., 399 x 0.01) if the data is 399.
17A7 (6055)	17A7 (6055)	R	Y-axis workpiece coordinate system present position	Outputs the Y-axis workpiece coordinate system present position. See X-axis workpiece coordinate system present position for the data configuration.
---	17A8 (6056)	R	Z-axis workpiece coordinate system present position	Outputs the Z-axis workpiece coordinate system present position. See X-axis workpiece coordinate system present position for the data configuration.
---	17A9 (6057)	R	U-axis workpiece coordinate system present position	Outputs the U-axis workpiece coordinate system present position. See X-axis workpiece coordinate system present position for the data configuration.
17AA (6058)	17AA (6058)	R	X-axis reference coordinate system present position in pulses	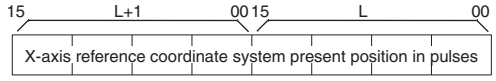 Outputs pulses for the X-axis reference coordinate system present position. The data is 32-bit signed binary data. L+1: Leftmost bit, L: Rightmost bit Range: FD9DA601 to 026259FF Hex (–39999999 to 39999999)
17AB (6059)	17AB (6059)	R	Y-axis reference coordinate system present position in pulses	Outputs pulses for the Y-axis reference coordinate system present position. See X-axis reference coordinate system present position in pulses for the data configuration.
---	17AC (6060)	R	Z-axis reference coordinate system present position in pulses	Outputs pulses for the Z-axis reference coordinate system present position. See X-axis reference coordinate system present position in pulses for the data configuration.
---	17AD (6061)	R	U-axis reference coordinate system present position in pulses	Outputs pulses for the U-axis reference coordinate system present position. See X-axis reference coordinate system present position in pulses for the data configuration.
17AE (6062)	17AE (6062)	R	X-axis error counter value in pulses	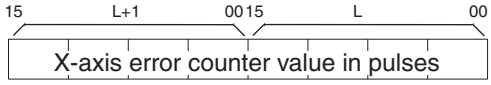 Outputs pulses for the X-axis error counter value. The data is 32-bit signed binary data. L+1: Leftmost bit, L: Rightmost bit Range: FFFF0000 to 0000FFFF Hex (–65536 to 65535)
17AF (6063)	17AF (6063)	R	Y-axis error counter value in pulses	Outputs pulses for the Y-axis error counter value. See X-axis error counter value in pulses for the data configuration.
---	17B0 (6064)	R	Z-axis error counter value in pulses	Outputs pulses for the Z-axis error counter value. See X-axis error counter value in pulses for the data configuration.
---	17B1 (6065)	R	U-axis error counter value in pulses	Outputs pulses for the U-axis error counter value. See X-axis error counter value in pulses for the data configuration.

Address		R/W	Name	Description
MC221	MC421			
17B2 (6066)	17B2 (6066)	R	X-axis workpiece origin shift value	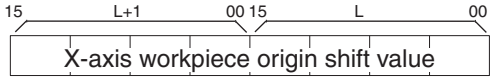 Outputs the shift value between the X-axis reference coordinate system origin and the workpiece coordinate system origin. The data is 32-bit signed binary data. L+1: Leftmost bit, L: Rightmost bit Range: FD9DA601 to 026259FF Hex (–39999999 to 39999999) The minimum setting unit is set to 2 (for 0.01), the display unit is set to 0 (for mm) and the reference origin offset is 3.99 [mm] (i.e., 399 x 0.01) if the data is 399.
17B3 (6067)	17B3 (6067)	R	Y-axis workpiece origin shift value	Outputs the shift value between the Y-axis reference coordinate system origin and the workpiece coordinate system origin. See the X-axis workpiece origin shift value for the data configuration.
---	17B4 (6068)	R	Z-axis workpiece origin shift value	Outputs the shift value between the Z-axis reference coordinate system origin and the workpiece coordinate system origin. See the X-axis workpiece origin shift value for the data configuration.
---	17B5 (6069)	R	U-axis workpiece origin shift value	Outputs the shift value between the U-axis reference coordinate system origin and the workpiece coordinate system origin. See the X-axis workpiece origin shift value for the data configuration.
17B6 (6070)	17B6 (6070)	R	X-axis phase Z margin in pulses	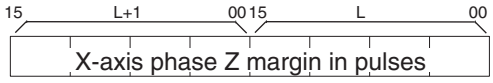 Outputs pulses for the distance between the origin proximity sensor and encoder phase-Z signal. Outputs pulses for the distance between the origin proximity sensor and the encoder phase A signal. The data is 32-bit signed binary data. L+1: Leftmost 16 bits, L: Rightmost 16 bits Range: FD9DA601 to 026259FF Hex (–39999999 to 39999999) 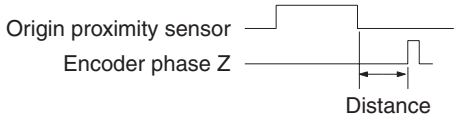 This data is refreshed whenever the origin search operation is completed. The distance fluctuates slightly due to the searching speed at the time phase Z is detected. This fluctuation can be determined from the following formula. Fluctuation (pulses) = Searching speed when phase Z is detected (pulses/s)/250
17B7 (6071)	17B7 (6071)	R	Y-axis phase Z margin in pulses	Outputs pulses for the Y-axis phase Z margin. See the X-axis phase Z margin for the data configuration.
---	17B8 (6072)	R	Z-axis phase Z margin in pulses	Outputs pulses for the Z-axis phase Z margin. See the X-axis phase Z margin for the data configuration.
---	17B9 (6073)	R	U-axis phase Z margin in pulses	Outputs pulses for the U-axis phase Z margin. See the X-axis phase Z margin for the data configuration.
17BA (6074)	17BA (6074)	R	X-axis reference coordinate system present position in pulses	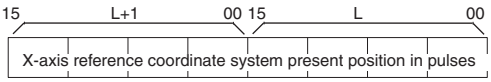 Outputs pulses for the X-axis reference coordinate system present position. A wider range of positions is output in comparison to the X-axis reference coordinate system output in pulses at address 17AA Hex (6058). The data is 32-bit signed binary data. L+1: Leftmost 16 bits, L: Rightmost 16 bits Range: 80000000 to 7FFFFFFF Hex (–2147483648 to 2147483647)

Address		R/W	Name	Description
MC221	MC421			
17BB (6075)	17BB (6075)	R	Y-axis reference coordinate system present position in pulses	Outputs pulses for the Y-axis reference coordinate system present position. A wider range of positions is output in comparison to the Y-axis reference coordinate system in pulses at address 17AB hex (6059). See X-axis reference coordinate system present position in pulses for the data configuration.
---	17BC (6076)	R	Z-axis reference coordinate system present position in pulses	Outputs pulses for the Z-axis reference coordinate system present position. A wider range of positions is output in comparison to the Z-axis reference coordinate system in pulses at address 17AC hex (6060). See X-axis reference coordinate system present position in pulses for the data configuration.
---	17BD (6077)	R	U-axis reference coordinate system present position in pulses	Outputs pulses for the U-axis reference coordinate system present position. A wider range of positions is output in comparison to the U-axis reference coordinate system in pulses at address 17AD hex (6061). See X-axis reference coordinate system present position in pulses for the data configuration.
17BE (6078)	17BE (6078)	R	Number of X-axis multiturns	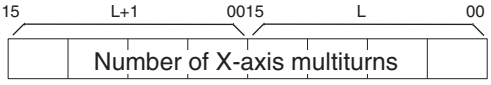 When the unlimited feeding function is used, the rotation counter value is output as 32-bit signed binary data. L+1: Leftmost 16 bits, L: Rightmost 16 bits Range: 80000000 to 7FFFFFFF hex (-2147483648 to 2147483647)
17BF (6079)	17BF (6079)	R	Number of Y-axis multiturns	When the unlimited feeding function is used, the rotation counter value is output as 32-bit signed binary data. See the information above on the number of X-axis multiturns for the data configuration.
---	17C0 (6080)	R	Number of Z-axis multiturns	When the unlimited feeding function is used, the rotation counter value is output as 32-bit signed binary data. See the information above on the number of X-axis multiturns for the data configuration.
---	17C1 (6081)	R	Number of U-axis multiturns	When the unlimited feeding function is used, the rotation counter value is output as 32-bit signed binary data. See the information above on the number of X-axis multiturns for the data configuration.

3-6 Command Area

Unlike system parameters, position data and monitor data, the following functions are executed by writing special command data in the command area using IOWR instructions.

- Writing position data or system parameters to flash memory.
- Transferring position data (read/write).
- Using the CX-Motion allows downloading of MC programs and position data to an MC Unit from the external memory device of a personal computer. (Autoloading)
- Presetting the present position for an axis.
- Setting the teaching address for a task.

3-6-1 Command Area Addresses

In the table, W means the data can be written only and R/W means the data can be read and written. Refer to *3-6-2 Command Area Data Configuration* for details on the configuration of data that is read, and refer to *SECTION 4 Data Transfer and Storage* for details on the procedure for executing these functions. Numbers in parentheses ( ) are decimal addresses.

Command area		R/W	Address	Number of words to transfer
Writing position data to flash memory		R/W	17D4 hex (6100)	0002 hex
Writing system parameters to flash memory		R/W	17D5 hex (6101)	0002 hex
Writing position data		W	17D6 hex (6102)	0006 hex
Reading position data		W	17D7 hex (6103)	0006 hex
Setting automatic loading		R/W	17D8 hex (6104)	0002 hex
Presetting the present position	X axis	W	17DE hex (6110)	0002 hex
	Y axis	W	17EF hex (6111)	
	Z axis	W	17E0 hex (6112)	
	U axis	W	17E1 hex (6113)	
Setting the teaching address	Task 1	W	17E2 hex (6114)	0002 hex
	Task 2	W	17E3 hex (6115)	
	Task 3	W	17E4 hex (6116)	
	Task 4	W	17E5 hex (6117)	
Override function selection		W	17E8 hex (6120)	0002 hex

Note The override function selection can be used only with Unit Ver. 1.15 or later, and with Units whose model number ends in -V1.

3-6-2 Command Area Data Configuration

In the table, W means the data can be written only and R/W means the data can be read and written. The CS1W-MC221 has only X and Y axes and tasks 1 and 2. In the address column, the top numbers are hexadecimal values and the bottom numbers in parentheses ( ) are decimal values.

Address		R/W	Name	Description
MC221	MC421			
17D4 (6100)	17D4 (6100)	R/W	Writing position data to the flash memory	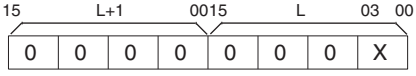 Writes position data to the flash memory. Writes position data to flash memory. Set this area at 1 to write position data to flash memory. The following appears after the data is read. X = 0: Write has not been executed or it has been completed. X = 1: Data is being written, or there is a writing error. The area will be set to 0 when the data has been written.
17D5 (6101)	17D5 (6101)	R/W	Writing system parameters to flash memory	Writes system parameters to flash memory. The meaning and usage here is the same as writing position data to flash memory.

<table>
<tr><th colspan="2">Address</th><th>R/W</th><th>Name</th><th>Description</th></tr>
<tr><th>MC221</th><th>MC421</th><th></th><th></th><th></th></tr>
<tr><td>17D6
(6102)</td><td>17D6
(6102)</td><td>W</td><td>Writing position data</td><td>
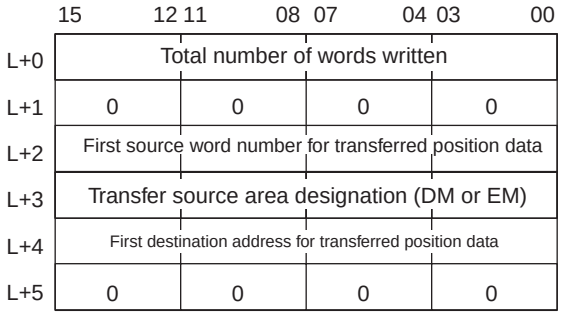

This parameter can transfer a maximum of 2,000 positions to an MC Unit at one time. It executes by specifying the address (17D6 Hex) with the first operand of the IOWR instruction. The address of the word that will be transferred is written first in DM or EM.
Range: 0003 to 1770 Hex (3 to 6,000, 3 words/data item)

Total number of words written
Specifies the total number of words for the 1 to 2,000 positions in multiples of three since each position data item is formed from three words.

First source word number for transferred position data
Specifies the address of the first word in the DM or EM area storing position data that will be transferred.

Transfer source area designation
Specifies the DM or EM area storing position data that will be transferred.
X = 0: DM area, X = 1 to D: Corresponds to banks 0 to C in the EM area

First destination address for transferred position data
Specifies the first destination address number in MC Unit internal RAM for the transferred position data.
Range: 0000 to 07CF Hex (0 to 1999)</td></tr>
<tr><td>17D7
(6103)</td><td>17D7
(6103)</td><td>W</td><td>Reading position data</td><td>
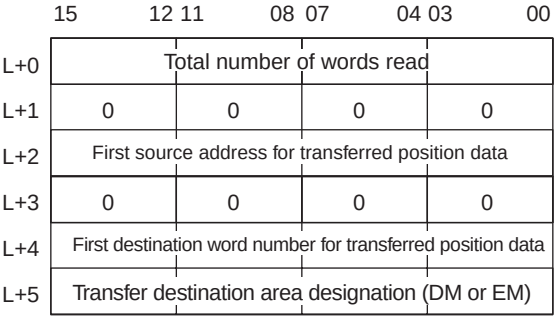

This parameter can read a maximum of 2,000 positions from an MC Unit at one time. It executes by specifying the address (17D7 Hex) with the first operand of the IOWR instruction. Data is read to DM or EM.

Total number of words read
Specifies the total number of words for the 1 to 2,000 positions in multiples of three since each position data item is formed from three words.
Range: 0003 to 1770 Hex (3 to 6,000, 3 words/data item)

First source address for transferred position data
Specifies the first source address number in MC Unit internal RAM for the transferred position data.
Range: 0000 to 07CF Hex (0 to 1999)

First destination word number for transferred position data
Specifies the first word number of the DM or EM area that will store the transferred position data.

Transfer destination area designation
Specifies the DM or EM area for storing position data that will be transferred.
X = 0: DM area, X = 1 to D: Corresponds to banks 0 to C in the EM area</td></tr>
</table>

Address		R/W	Name	Description
MC221	MC421			
17D8 (6104)	17D8 (6104)	R/W	Specifying automatic loading	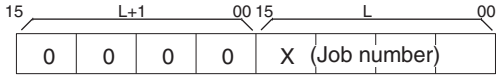 This parameter is used when batch downloading programs and position data to an MC Unit from the external memory device of a personal computer with CX-Motion. X (Job number) Specifies a job number within a range from 0001 to 2710 Hex (1 to 10,000). The following contents can be read this address using an IORD instruction. X = 0000: Power supply ON, automatic loading completed normally X = 0001 to 2710 Hex (1 to 10,000): Specified job number or executing job number
17DE (6110)	17DE (6110)	W	Presetting the X-axis present position	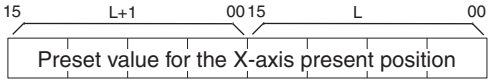 Sets the X-axis present position to any value and checks the origin. The data is 32-bit signed binary data. L+1: Leftmost 16 bits, L: Rightmost 16 bits Range: FD9DA601 to 026259FF Hex (–39999999 to 39999999) The minimum setting unit is set to 2 (for 0.01), the display unit is set to 0 (for mm) and the reference origin offset is 3.99 [mm] (i.e., 399 x 0.01) if the data is 399.
17DF (6111)	17DF (6111)	W	Presetting the Y-axis present position	Sets the Y-axis present position to any value and checks the origin. The data configuration is the same as that for presetting the X-axis present position.
---	17E0 (6112)	W	Presetting the Z-axis present position	Sets the Z-axis present position to any value and checks the origin. The data configuration is the same as that for presetting the X-axis present position.
---	17E1 (6113)	W	Presetting the U-axis present position	Sets the U-axis present position to any value and checks the origin. The data configuration is the same as that for presetting the X-axis present position.
17E2 (6114)	17E2 (6114)	W	Setting the task 1 teaching address	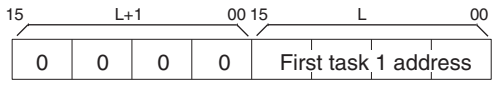 Sets the start address for task 1 teaching. Range: 0000 to 07CF Hex (1 to 1999)
17E3 (6115)	17E3 (6115)	W	Setting the task 2 teaching address	Sets the start address for task 2 teaching. The data configuration is the same as that for setting the task 1 teaching address.
---	17E4 (6116)	W	Setting the task 3 teaching address	Sets the start address for task 3 teaching. The data configuration is the same as that for setting the task 1 teaching address.
---	17EE5 (6117)	W	Setting the task 4 teaching address	Sets the start address for task 4 teaching. The data configuration is the same as that for setting the task 1 teaching address.
17E8 (6120)	17E8 (6120)	W	Override function selection (See note.)	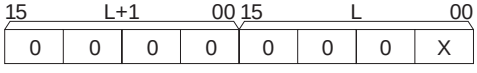 Enables or disables the override value after turning OFF the Override Setting Bit. Enable (X = 0): The set override value is enabled even after the Override Setting Bit is turned OFF, and operation proceeds with the set override value. Disable (X = 1): The override value is disabled after the Override Setting Bit is turned OFF, and operation proceeds with 100% override. The override is enabled (X = 0) when the power is turned ON.

Note The override function selection can be used only with Unit Ver. 1.15 or later, and with Units whose model number ends in -V1.

SECTION 4
Data Transfer and Storage

This section describes the means used to store data of various types and explains how data is transferred between the MC Unit and the CPU Unit.

4-1 Data Transfer and Storage: Overview 202
4-1-1 Data Transfer 202
4-1-2 Types of Data 203
4-1-3 Using IOWR and IORD Instructions to Transfer Data 204
4-1-4 Transferring Position Data Using the Command Area 206
4-1-5 Data Storage 208
4-2 IOWR and IORD Specifications 209
4-2-1 IOWR: INTELLIGENT I/O WRITE 209
4-2-2 IORD: INTELLIGENT I/O READ 213
4-2-3 Transferring Data Using the Command Area 217
4-3 Saving Data 221
4-3-1 Execution 221
4-3-2 Command Specifications 221
4-3-3 Ladder Program Example 222

4-1 Data Transfer and Storage: Overview

4-1-1 Data Transfer

The following methods are available for transferring data between the CPU Unit and an MC Unit.

1,2,3... 1. Download or upload data from CX-Motion.

Programs, system parameters, and position data created with CX-Motion, can be downloaded to the MC Unit, or the system parameters and position data in the MC Unit can be uploaded to CX-Motion. Refer to the *CX-Motion Online Help* for actual procedures.

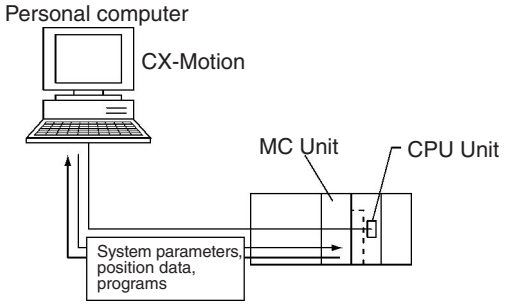

2. Read and write data directly using IOWR/IORD instructions in the ladder program.

The IOWR/IORD instructions can be used to read or write data while the CPU Unit is running.

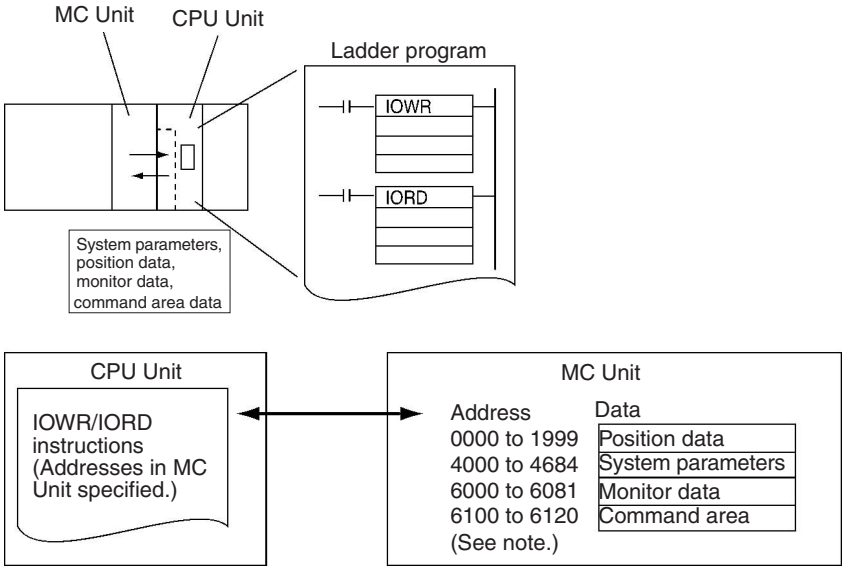

Note Command Area address 6120 (override function selection) can be used only with Unit Ver. 1.15 or later, and with Units whose model number ends in -V1.

There are basically three ways that the IOWR/IORD instructions can be used to read and write data.

Purpose	Description
Reading/writing specific position data or parameters Reading monitor data	IOWR/IORD commands are used when: • One system parameter is to be written/read. • Data for up to four position is to be written/read. • One item in the monitor data is to be read.
Read/writing large amounts of position data	IOWR can be used to write data to the command area to read/write data for up to 2,000 positions at once.
Saving data to flash memory	IOWR can be used to write data to the command area to save system parameters or position data to flash memory.

3. Execute autoloading from the IOWR instruction in the ladder program.
   IOWR can be used to write an operation code to the command area to automatically download programs or position data from the CX-Motion. Refer to *6-16 Automatic Loading.*

Note A system setting error can occur when system parameters are transferred to an MC Unit. To enable the parameters when this happens, save the parameters in flash memory, and then turn MC Unit power OFF and ON or restart the MC Unit.

A system setting error occurs if unit parameters and machine specification parameters are changed without being enabled by cycling MC Unit power or restarting the Unit. Always save the parameters in flash memory before turning MC Unit power OFF or restarting the Unit, otherwise the Unit will return to the original system parameters.

4-1-2 Types of Data

The following types of data can be transferred by using CX-Motion, directly by executing IOWR/IORD instruction, or by executing an IOWR instruction to write data to the command area.
Refer to *SECTION 3 MC Unit Internal Data Configuration* for details on the data that can be written and addresses.

O: Possible, X: Not possible

Data	Content	Data structure	Read/Write								
			CX-Motion (note 1)			IOWR/IORD			Teaching Box		
			Read	Write	Save	Read	Write	Save	Read	Write	Save
Programs	G code programs describing positioning operations	Intermediate code	❍	❍	❍	×	×	×	×	×	×
Position data	Data that indicates positions	3 words per position	❍	❍	❍	❍	❍	❍	❍	❍	❍
System parameters (See note 7.)	Number of axes used, number of tasks, feed rates, and other system data	2 words per parameter	❍	❍	❍	❍	❍ (note 2)	❍	❍ (note 3)	❍ (note 3)	❍
Monitor data	Error codes, present positions, currently executing program numbers, and other data	2 words per item	❍ (note 4)	×	×	❍	×	×	❍ (note 5)	×	×
Command area	Special codes written using the IOWR instruction to transfer position data, save data to flash memory, or to perform autoloading.	2 or 6 words per command	×	×	×	❍ (note 6)	❍	×	×	×	×

Note

1. From CX-Motion, all data is read or written at the same time. Only portions of one type of data cannot be specified.
2. All parameters must be written. Refer to *SECTION 3 MC Unit Internal Data Configuration* for details.
3. Servo parameters can be read or written.
4. Present positions, error information, program execution information, and I/O signal status can be read.
5. Present positions, error information, and I/O signal status can be read.
6. All parameters must be read. Refer to *SECTION 3 MC Unit Internal Data Configuration* for details.
7. Parameters changed with G69 in the G code cannot be saved.

4-1-3 Using IOWR and IORD Instructions to Transfer Data

Example 1

In the following example, position data is written to the MC Unit by executing the IOWR instruction.

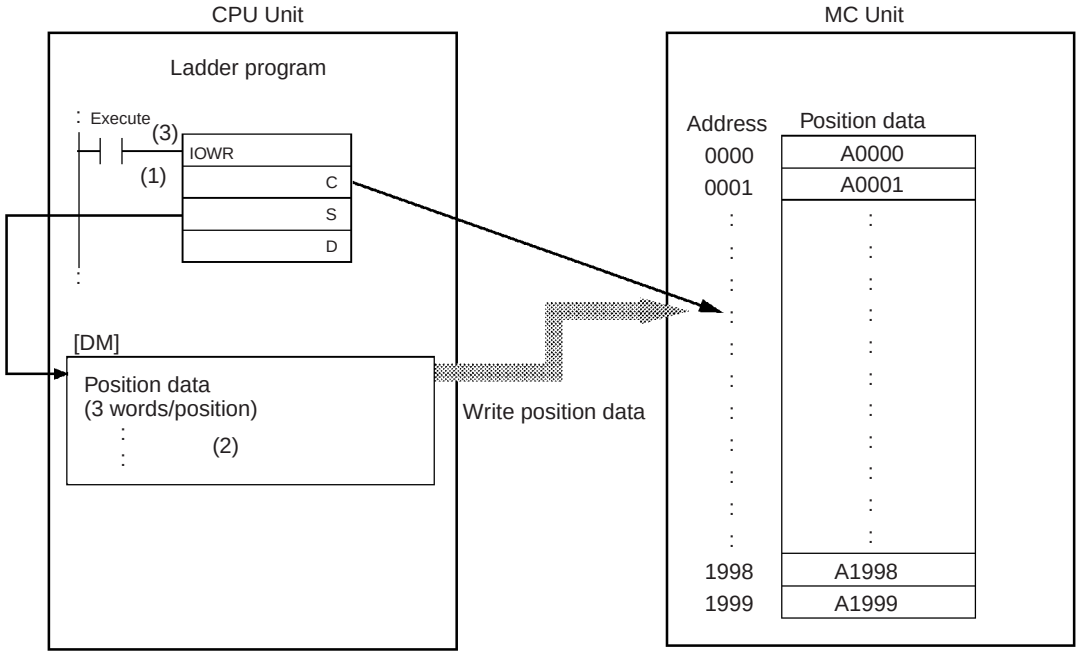

1,2,3...

1. Set the following data for the operands of the IOWR instruction.
   - C: The first destination address in the MC Unit for the position data.
   - S: The first word in the CPU Unit (e.g., in DM Area) containing the position data to be transferred.
   - D: The destination unit number and total number of words for the position data that will be transferred. Each position requires three words.
2. Set the data to be transferred starting at the word specified for S.
3. Execute the IOWR instruction to transfer position data.

Example 2

In the following example, system parameters are read from the MC Unit by executing the IORD instruction.

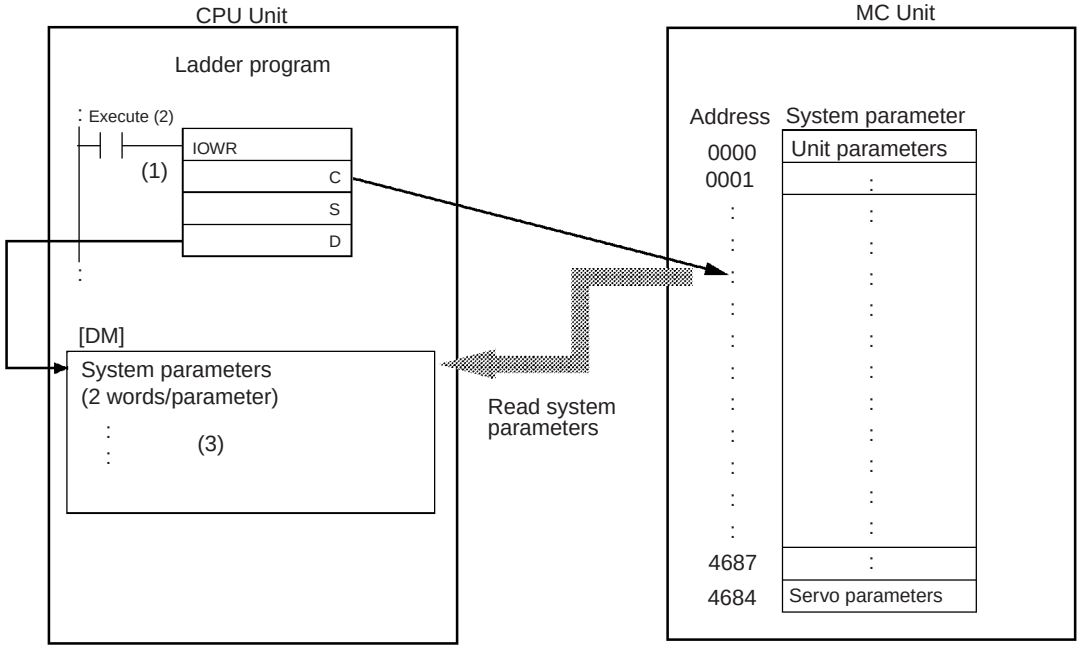

1,2,3... 1. Set the following data for the operands of the IORD instruction.

C: The first address in the MC Unit with the system parameter to be read.

S: The destination unit number and total number of words for the position data that will be transferred. Each parameter requires two words.

D: The first word (e.g., in DM Area) where the system parameters will be written in the CPU Unit.

2. Execute the IORD instruction.
3. The system parameters will be stored in the CPU Unit starting from the word specified for D.

4-1-4 Transferring Position Data Using the Command Area

Example 1

In the following example, position data is written to an MC Unit.

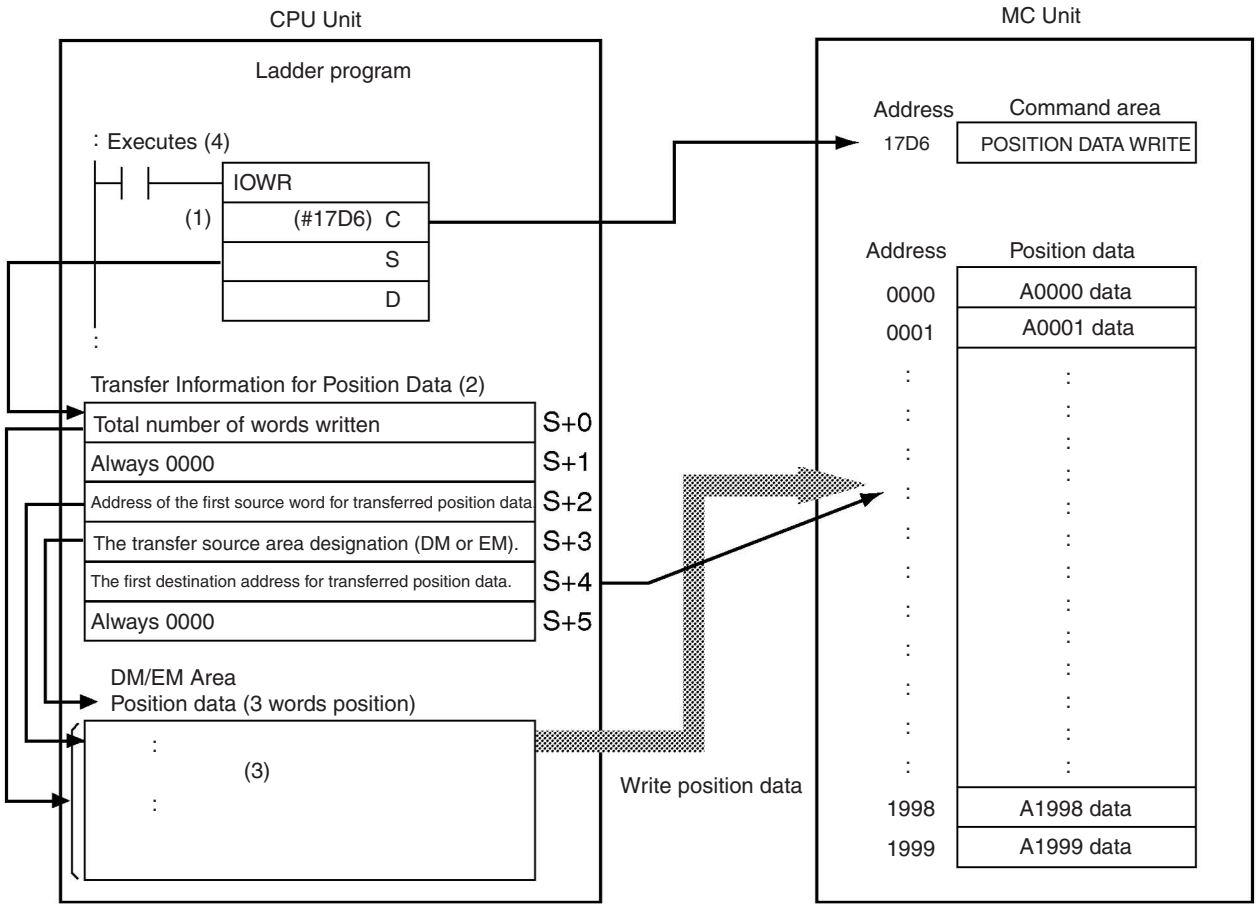

1,2,3... 1. Set the following data for the operands of the IOWR instruction.

C: The address of the command area (17D6 hex). Refer to *3-6 Command Area* for information on the command area.

S: The first word (in DM/EM Area) storing the position data that will be transferred.

D: The destination unit number and total number of words of the position data that will be transferred. The total number of words transferred is 0006 hex (POSITION DATA WRITE).

Example: If the Unit No. is 12, D = #00060000C

2. Set the following data as the transfer data for position data.

L+0: Total number of words written

Specify the total number of words for the 1 to 2,000 position data items in multiples of three (each position requires three words).

Range: 0003 to 1770 hex (3 to 6,000, 3 words/data item)

S+1: Always 0000 hex

S+2: The first source address of transferred position data.
Specifies the first source address in the DM or EM area that is storing position data that will be transferred.

S+3: The transfer source area designation (DM or EM).
Specifies the DM or EM area that is storing position data that will be transferred.
X = 0: DM Area, X = 1 to D: Correspond to banks 0 to C in the EM Area

S+4: The first destination address for transferred position data. Specifies the first destination address in MC Unit internal RAM for the transferred position data.
Range: 0000 to 07CF hex (0 to 1999)

S+5: Always 0000 hex

3. Set the position data to be transferred in the DM/EM Area beginning at the word specified for S+2. Each position requires three words.
4. Execute the IOWR instruction to transfer position data to the MC Unit.

Example 2

In the following example, position data is read from an MC Unit.

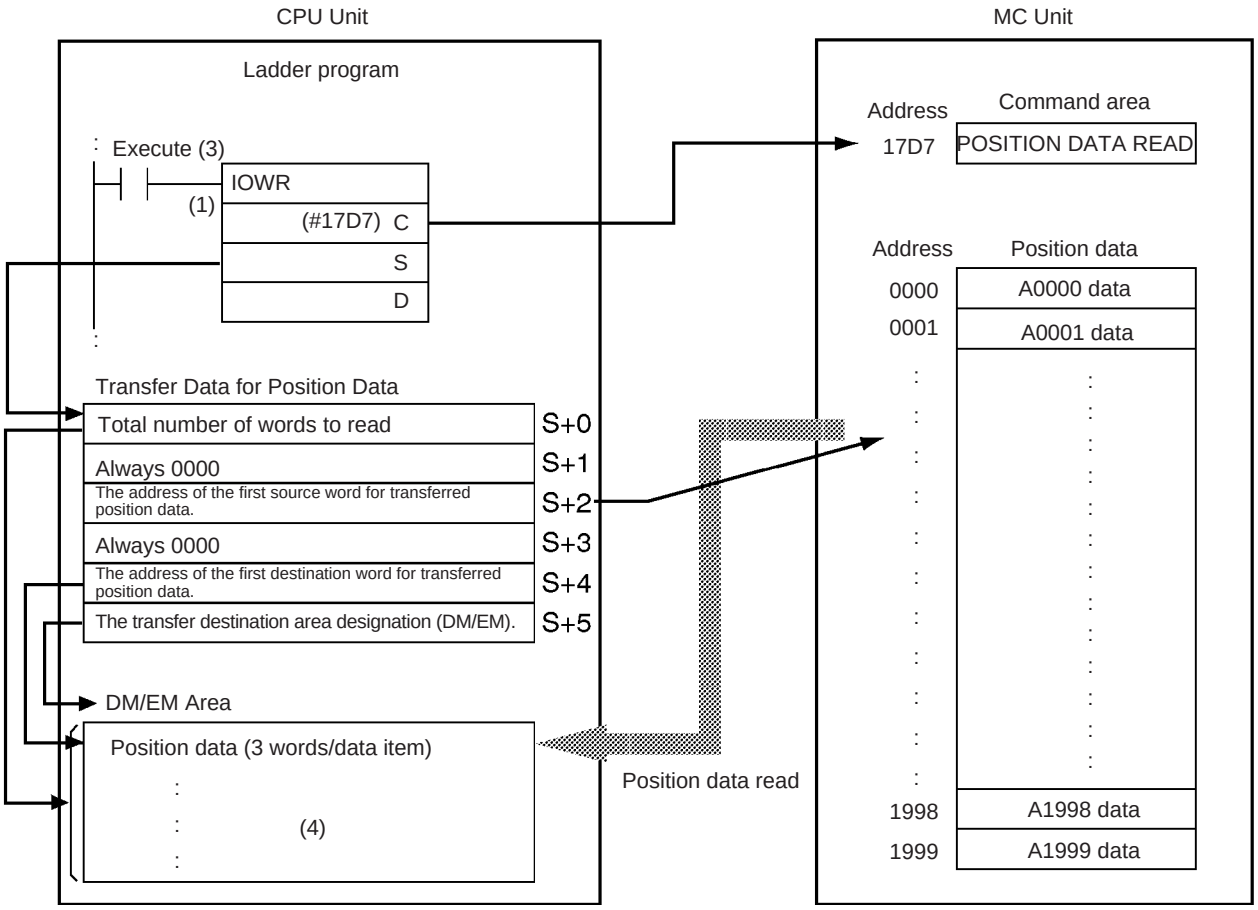

1,2,3... 1. Set the following data for the operands of the IOWR instruction.

C: The address of the command area (17D7 hex). Refer to *3-6 Command Area* for information on the command area.

S: The first word (in DM/EM Area) to store the position data that will be transferred.

D: The destination unit number and total number of words for the position data that will be transferred.
The total number of words transferred is 0006 hex (transfer data for position data).
Example: If the Unit No. is 12, D = #00060000C

2. Set the following data as the transfer data for position data.

S+0: Total number of words to read
Specify the total number of words for the 1 to 2,000 position data items in multiples of three (each position requires three words).
Range: 0003 to 1770 hex (3 to 6,000, 3 words/position)

S+1: Always 0000 hex

S+2: The address of the first source word for position data to be transferred. Specifies the first source address in internal MC Unit RAM for position data that will be transferred.
Range: 0000 to 07CF hex (0 to 1999)

S+3: Always 0000 hex

S+4: The first destination address for transferred position data. Specifies the first word address in the DM or EM Area that will store the position data transferred from the MC Unit.

S+5: The transfer source area designation (DM or EM). Specifies the DM or EM area that will store position data.
X = 0: DM Area, X = 1 to D: Corresponds to banks 0 to C in the EM Area

3. Execute the IOWR instruction to transfer position data to the MC Unit.
4. Each position requires three words.

4-1-5 Data Storage

Transferred position data and system parameters are written to internal MC Unit memory where they will be used for operation, but they will be lost if MC Unit power is turned OFF or the Unit is restarted. The data must be saved in flash memory using the command area to keep the data in the MC Unit permanently. Refer to *4-3 Saving Data* for more details on storing data in flash memory.

Once data has been saved, it is stored in internal MC Unit flash memory where it will be available the next time MC Unit power is turned ON or the Unit is restarted. Position data and system parameters that are simply transferred without being saved will be lost when MC Unit power is turned OFF or the Unit is restarted.

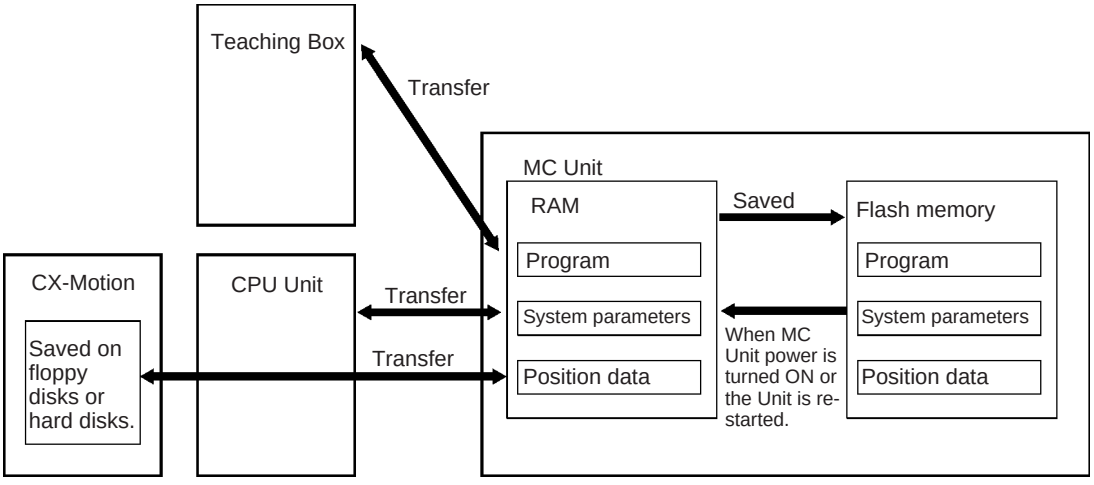

Refer to *4-1-2 Types of Data* for information on transferring and saving data from the CX-Motion, CPU Unit, or a Teaching Box.

Note

1. Data that has been saved is automatically read to internal memory from flash memory when MC Unit power is turned ON or the Unit is restarted.
2. Do not turn OFF MC Unit power or restart the Unit while data is being saved. Doing so may damage the flash memory in the MC Unit.
3. Flash memory has a limited service life. Data can be written up to 100,000 times.

⚠ **Caution** Do not save data to flash memory during operation or while a motor is being driven. Doing so can result in unexpected operation.

4-2 IOWR and IORD Specifications

4-2-1 IOWR: INTELLIGENT I/O WRITE

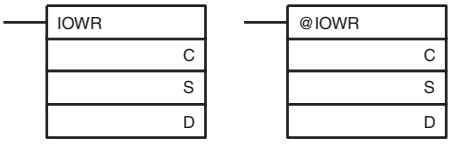

C: Control code, S: First source word, D: Destination unit number and total number of words written

Oper-and	Description
C	MC Unit address (Hex) Specifies the first address in the MC Unit to which data will be written.
S	First source word Specifies the first word in the CPU Unit from which data is to be transferred. The following areas can be specified as the source start word. Refer to the *SYSMAC CS Series Programmable Controller Operation Manual* (W399) for details on each address.

Area	Range
CIO Area	0000 to 6143
Work Area	W000 to 511
Holding Bit Area	H000 to 511
Auxiliary Area	A000 to 959
Timer Area	T0000 to 4095
Counter Area	C0000 to 4095
DM Area	D00000 to 32767
EM Area	E00000 to 32767
DM Area with bank designation	En_00000 to 32767 (n=0 to C)
Indirect DM/EM address, binary	@D00000 to 32767 @E00000 to 32767 @En_00000 to 32767 (n=0 to C)
Indirect DM/EM address, BCD	*D00000 to 32767 *E00000 to 32767 *En_00000 to 32767 (n=0 to C)

Operand	Description
D	D+1 / D Total number of words transferred (Hex) | Destination unit number (Hex) Specify the destination unit number to which data will be transferred and the total number of words to transfer. Total number of words to transfer: 0002 to 000C hex (1 to 112) Position data: 0003 (1 position), 0006 (2 positions), 0009 (3 positions), 000C (4 positions) hex Command Area: 0002, 0006 hex System parameters and monitor data: 0002 hex Destination unit number: CS1W-MC421: 0000 to 005B hex (unit No. 0 to 91) CS1W-MC221: 0000 to 005D hex (unit No. 0 to 93) Example: Transferring 9 words of data to unit number 3 #000900003 (total number of words to transfer: 0009 (9 words), unit number: 0003 (No. 3))

Flags

Name	Symbol	ON	OFF
Error Flag	ER	• The total number of words transferred for D is not between 0000 and 0080 hex. • The unit number for D is not between 0000 and 005F hex. • The specified Special I/O Unit does not support the IOWR instruction • The specified Special I/O Unit has a setting error or Unit error.	None of the conditions on the left exists.
Equals Flag	=	• The write command was not completed normally. • The following error has occurred, in which case bit 14 of word n + 10/n + 18 will be ON: Position data was in the wrong format or not within acceptable ranges.	• The write command was not completed normally. • A previous transfer has not been completed. • The address specified in the MC Unit does not exist. • The specified MC Unit address is read-only. • The number of position data words transferred was not a multiple of three. • The number of system parameter words transferred was not two. • The value of the MC Unit address plus the number of words transferred divided by 3 exceeded 07CF hex (upper position data limit 1999), the last address for position data. • More than 12 words were specified for position data transfer. • The Teaching Box is in Enabled or Priority Mode.
Negative Flag	N	---	Always OFF

Ladder Programming Examples

Refer to the following examples of actual data transfer using an MC Unit with the unit number 0 mounted to a CS. In these examples, the IOWR operands and transfer data are all assumed to be correct.

When debugging, write ladder code that will check the status of the Error Flag and bit 14 of word n + 10/n + 18.

Example 1 Transferring Four Positions to A0456 to A0459 from D0100 to D0111

Position data		Position data address
345678.90	→	A0456
123456.78	→	A0457
–387654.32	→	A0458
123.456	→	A0459

Ladder Program

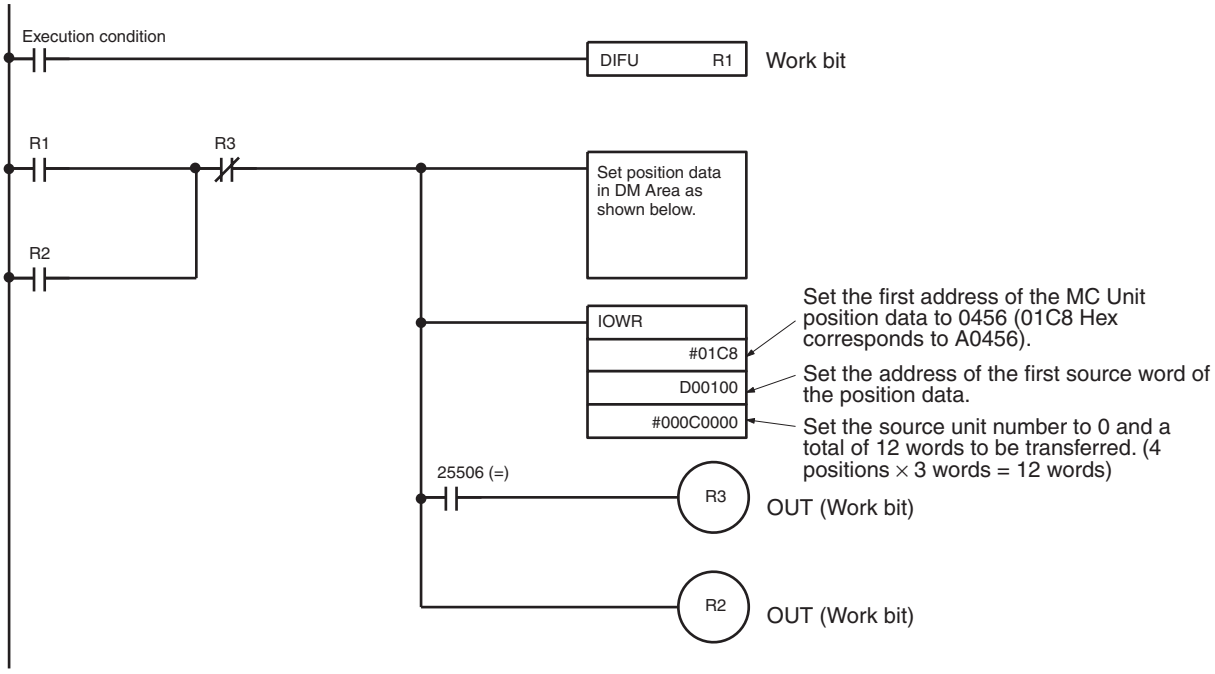

Settings

DM Area

D0100	0002	← 345678.90.
D0101	76D2	
D0102	020F	
D0103	0002	← 123456.78.
D0104	614E	
D0105	00BC	
D0106	0002	← –387654.32.
D0107	7C88	
D0108	FDB0	
D0109	0003	← 123.456.
D0110	E240	
D0111	0001	

Note Each position requires three words. Refer to *3-4 Position Data* for details.

Example 2 Changing Acceleration Time of X Axis to 500 ms

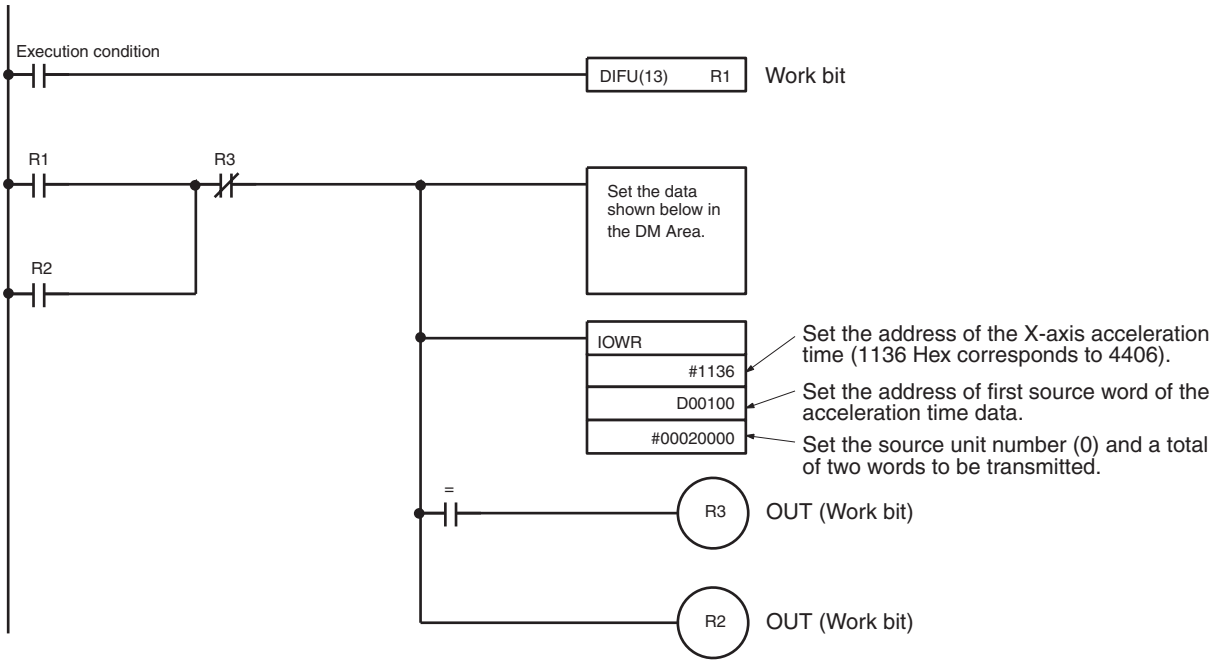

Settings
DM Area

D0100	01F4	← 500 ms.
D0101	0000	

Execution Timing for IOWR

Refer to the following diagrams for the execution timing and processing method of the IOWR instruction.

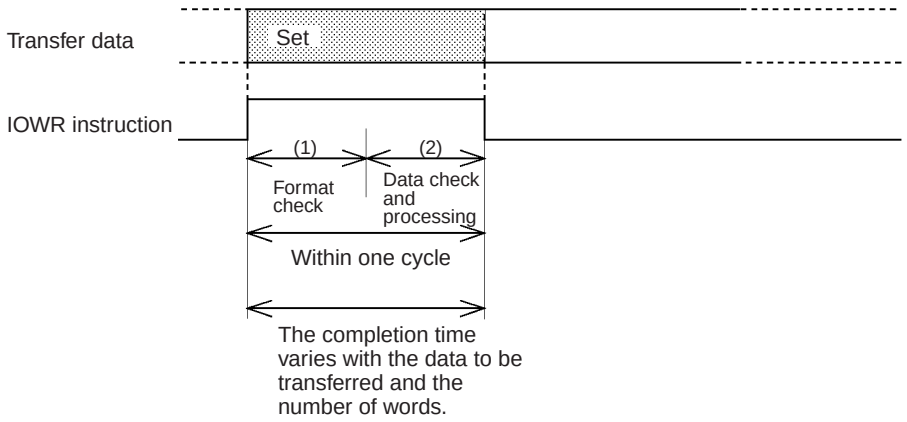

1,2,3... 1. The CPU Unit performs a format check to see if the designations for the IOWR instruction operands are correct. The Error Flag will be turned ON and the IOWR instruction will not be executed if a designation is incorrect.

2. The MC Unit performs a data check to see if the MC Unit can process the data designated with the operands. The Equals Flag will be turned ON if the MC Unit can process the data. The Equals Flag will not be turned ON and the IOWR instruction will not be executed if the MC Unit cannot process the data. The transfer will be completed by the time the Equals Flag turns ON.

   Data writing bit 06 of word n + 10/n + 18, data write error bit 7 of word n + 10/n + 18, data reading bit 08 of word n + 10/n + 18, and data read error bit 09 of word n + 10/n + 18 will not change when an IOWR instruction

specifying position data and system parameters directly is executed.

3. The range of the data transferred from the CPU Unit is checked. If the data is within range, it is moved to the specified addresses. If the data is not within range, the data is not moved, the Error Flag (CIO n+10/n+18 bit 14) is turned ON, and the error code is output to CIO n+11/n+19.

4-2-2 IORD: INTELLIGENT I/O READ

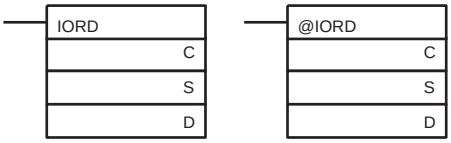

C: Control code, S: Source unit number and total number of data words read, D: Destination start word address

Operand	Description
C	MC Unit address (Hex) Specifies the first address in the MC Unit address to be read.
S	S+1 / S Total number of words transferred (Hex) / Destination unit number (Hex) Specify the destination unit number from which data will be read and the total number of words that will be read. Total number of words transferred: 0002 to 000C hex Position data: 0003 (1 position), 0006 (2 positions), 0009 (3 positions), 000C (4 positions) hex Command Area: 0002, 0006 hex System parameters and monitor data: 0002 hex Destination unit number: CS1W-MC421: 0000 to 005B hex (unit No. 0 to 91) CS1W-MC221: 0000 to 005D hex (unit No. 0 to 93) Example: Reading 12 words of data from unit number 3 #000C00003 (total number of words transferred: 000C (12 words), unit No.: 0003 (No. 3))

Operand	Description
D	First destination word Specifies the first word of the CPU Unit to store the data that will be read. The following areas can be specified as the destination start word address. Refer to the *SYSMAC CS Series Programmable Controller Operation Manual* (W399) for details.

Area	Range
CIO Area	0000 to 6143
Work Area	W000 to 511
Holding Bit Area	H000 to 511
Auxiliary Area	A000 to 959
Timer Area	T0000 to 4095
Counter Area	C0000 to 4095
DM Area	D00000 to 32767
EM Area	E00000 to 32767
DM Area with bank designation	En_00000 to 32767 (n=0 to C)
Indirect DM/EM address, binary	@D00000 to 32767 @E00000 to 32767 En_00000 to 32767 (n=0 to C)
Indirect DM/EM address, BCD	*D00000 to 32767 *E00000 to 32767 *En_00000 to 32767 (n=0 to C)

Flags

Name	Symbol	ON	OFF
Error Flag	ER	• The total number of data words transferred for S is not between 0000 and 0080 hex. • The unit number data for S is not between 0000 and 005F hex. • The specified Special I/O Unit does not support the IORD instruction. • The specified Special I/O Unit has a setting error or unit error.	None of the conditions on the left exists.
Equals Flag	=	• The read command was not completed normally. • The following error has occurred, in which case bit 14 of word n + 10/n + 18 will be ON: Position data was illegal data.	• The read command was not completed normally. • A previous transfer has not been completed. • The specified MC Unit address does not exist. • The position number of data words transferred was not a multiple of three. • The number of system parameter words transferred was not two. • The value of the MC Unit address plus the number of words transferred divided by 3 exceeded 07CF hex (upper position data limit 1999), the last address for position data. • More than 12 words were specified for position data transfer. • The Teaching Box is in Enabled or Reserved Mode.
Negative Flag	N	---	Always OFF

Ladder Programming Examples

Refer to the following examples of actual data read using an MC Unit with the unit number 0 mounted in a CS. In these examples, the IORD operands are assumed to be correct.

When debugging, write ladder code that will check the Error Flag and bit 14 of word n + 10/n + 18.

Example 1

Reading Position Data from A0456 to A0459 to D0100 to D0111.

	Position data	Position data address
A0456=	345678.90	→ D00100 to D00102
A0457=	123456.78	→ D00103 to D00105
A0458=	–387654.32	→ D00106 to D00108
A0459=	123.456	→ D00109 to D00111

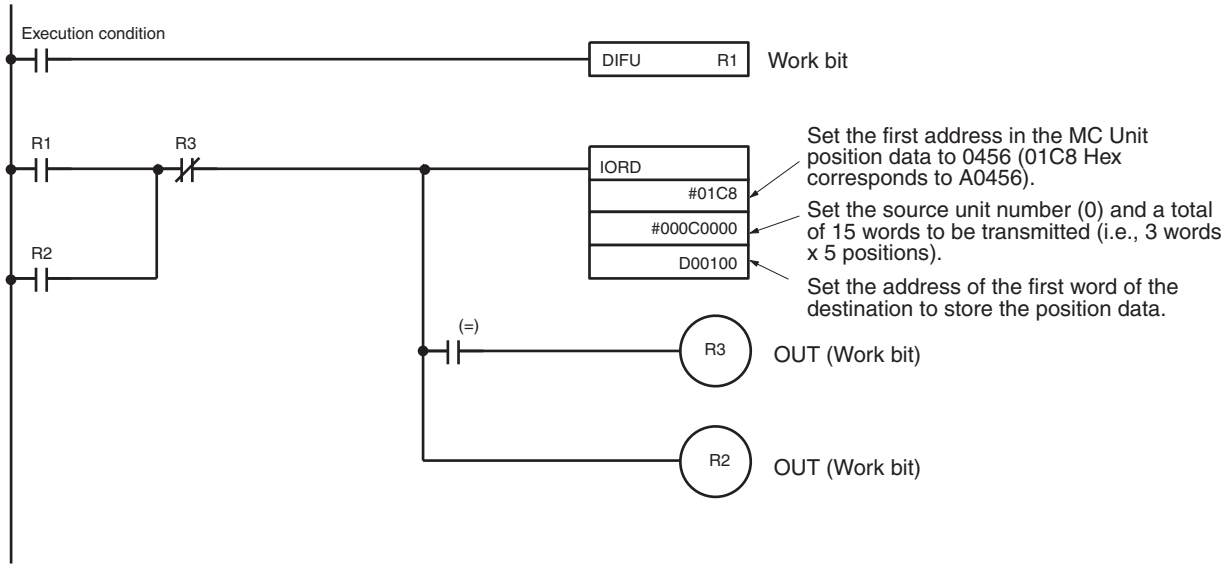

Settings

DM

D0100	0002	← 345678.90.
D0101	76D2	
D0102	020F	
D0103	0002	← 123456.78.
D0104	614E	
D0105	00BC	
D0106	0002	← –387654.32.
D0107	7C88	
D0108	FDB0	
D0109	0003	← 123.456.
D0110	E240	
D0111	0001	

Three words are required for each position.
Refer to *3-4 Position Data* for details.

Example 2 Reading the X-axis Acceleration Time (500 [ms]) to D00100 to D00101.

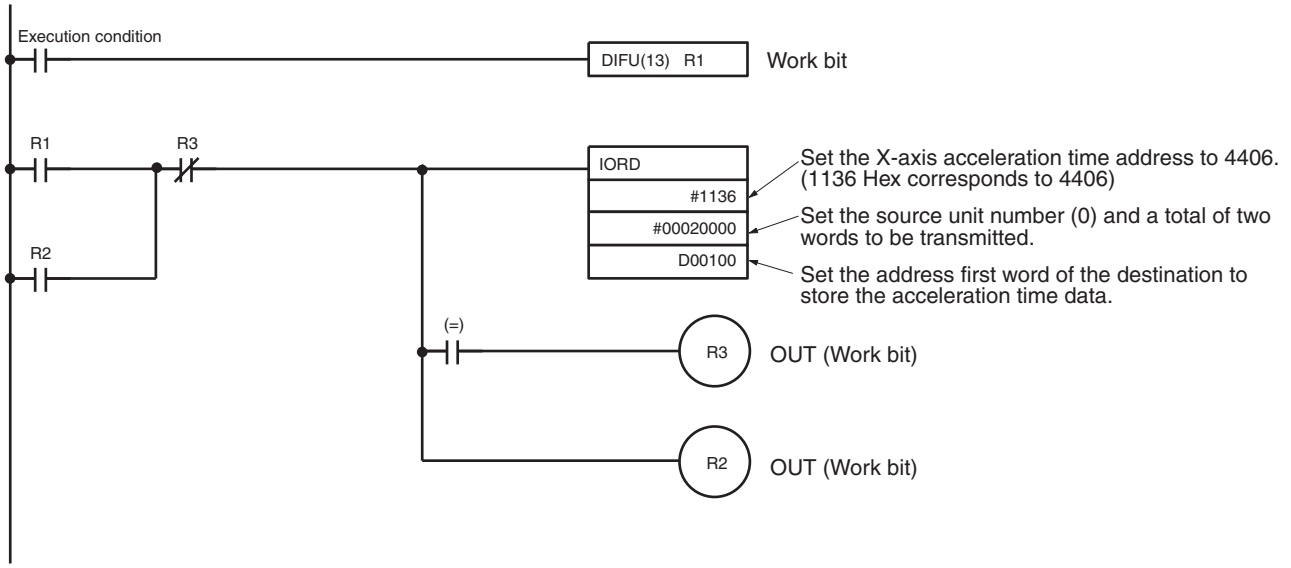

Data that Is Read [DM]

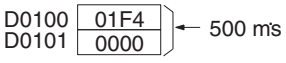

Execution Timing for IORD

Refer to the following diagram for the execution timing and processing method of the IORD instruction.

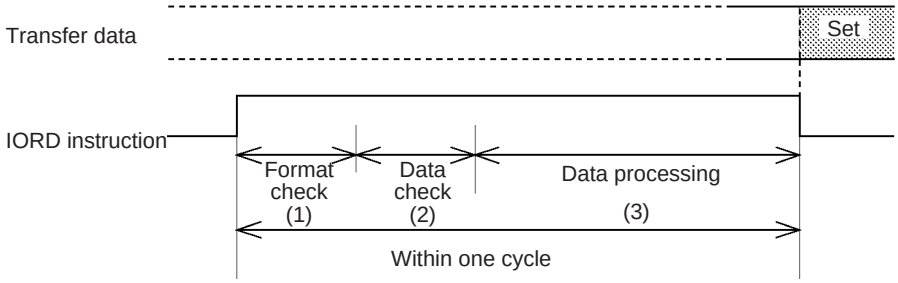

1,2,3...

1. The CPU Unit performs a format check to see if the designations for the IOWR instruction operands are correct. The Error Flag will be turned ON and the IOWR instruction will not be executed if a designation is incorrect.
2. The MC Unit performs a data check to see if the MC Unit can process the data designated with the operands. The Equals Flag will be turned ON if the MC Unit can process the data. The Equals Flag will not be turned ON and the IOWR instruction will not be executed if the MC Unit cannot process the data.
3. The specified data is transferred from the MC Unit to the CPU Unit. The Equals Flag will turn ON when the transfer has been completed.

Transfer Time Refer to *Section 1-5 Specifications.*

4-2-3 Transferring Data Using the Command Area

Refer to the following diagram for the execution timing and processing method of the IOWR instruction when the command area is used for large amounts of data.

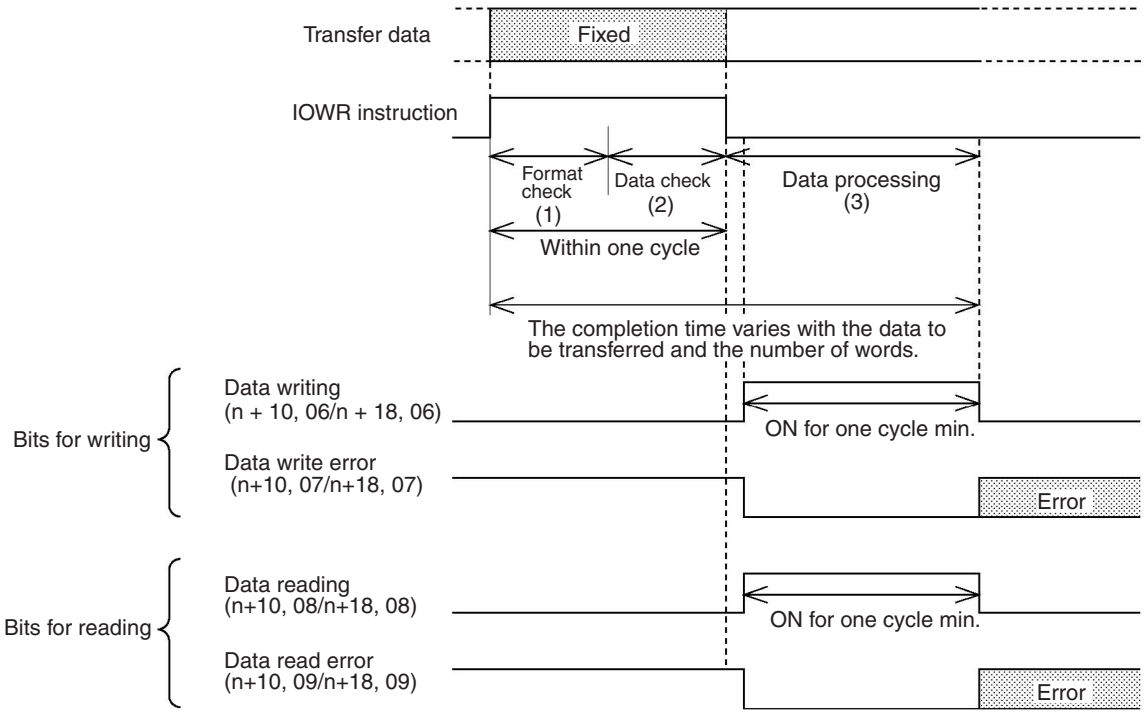

Note Addresses in parentheses are for the CS1W-MC221 on the left side of the slash and are for the CS1W-MC421 on the right side of the slash.

1,2,3... 1. The CPU Unit performs a format check to see if the designations for the IOWR instruction operands are correct. The Error Flag will be turned ON and the IOWR instruction will not be executed if a designation is in correct.

2. The MC Unit performs a data check to see if the MC Unit can process the data designated with the operand. The Equals Flag will be turned ON if the MC Unit can process the data. The Equals Flag will not be turned ON and the IOWR instruction will not be executed if the MC Unit cannot process the data.

Note If a command (e.g., for program execution) is given while data is being processed in step 2 above, the command will be executed after the data is processed.

Example: Program Execution after Position Data Transfer

The timing chart shows data for task 1.

1,2,3... 1. Position data is transmitted with the IOWR instruction.

2. The Equals Flag will be turned ON when the transmission of the position data has been completed.

3. The Data Writing Flag will turn OFF when data processing has been completed.

4. To execute the specified program, the Run command is given after confirming that the Writing Data Flag has turned OFF.

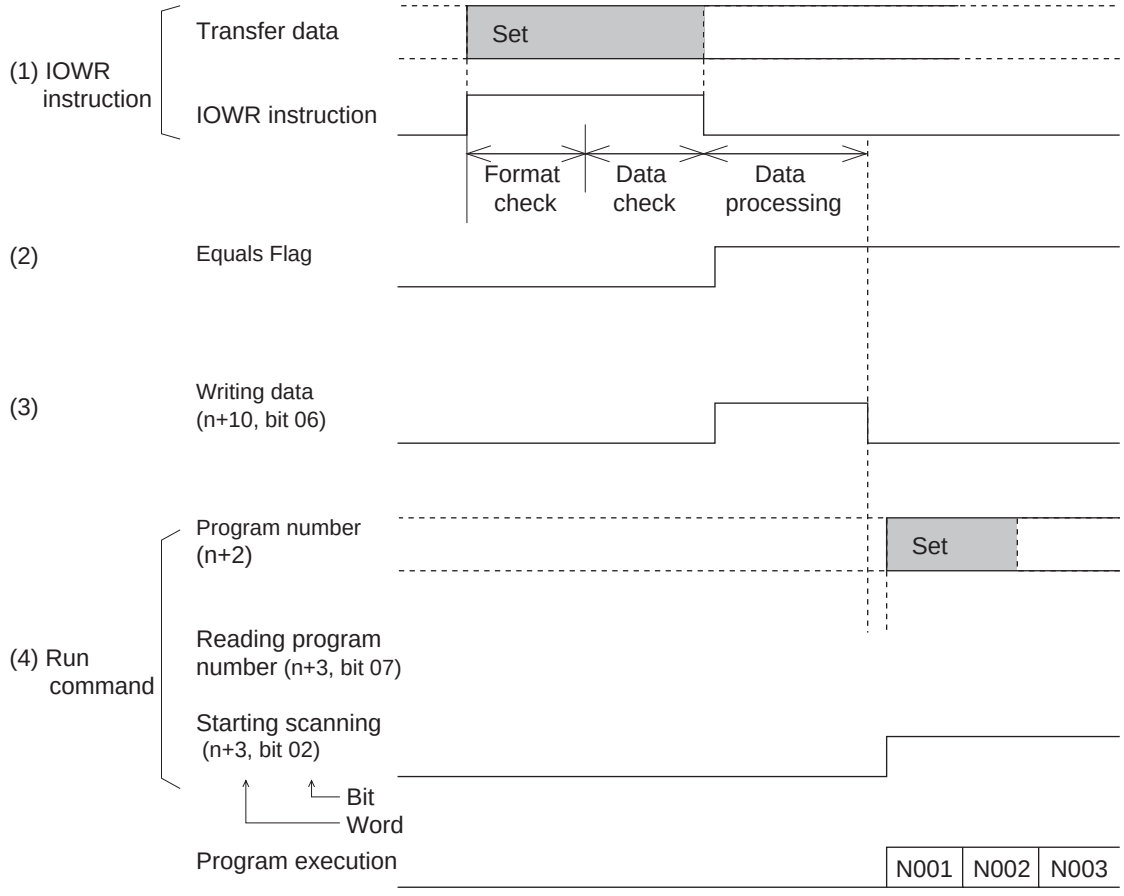

Transfer Time Refer to *Section 1-5 Specifications.*

Example 1 Transferring Positions to Addresses A0456 to A0460 Using the Command Area

A total of 2,000 data items or 6,000 words can be transferred at one time when the command area is used. The following example will transfer position data for 5 positions to the MC Unit.

Position data		Position data address
345678.90	→	A0456
123456.78	→	A0457
–387654.32	→	A0458
123.456	→	A0459
54321.00	→	A0460

Ladder Program

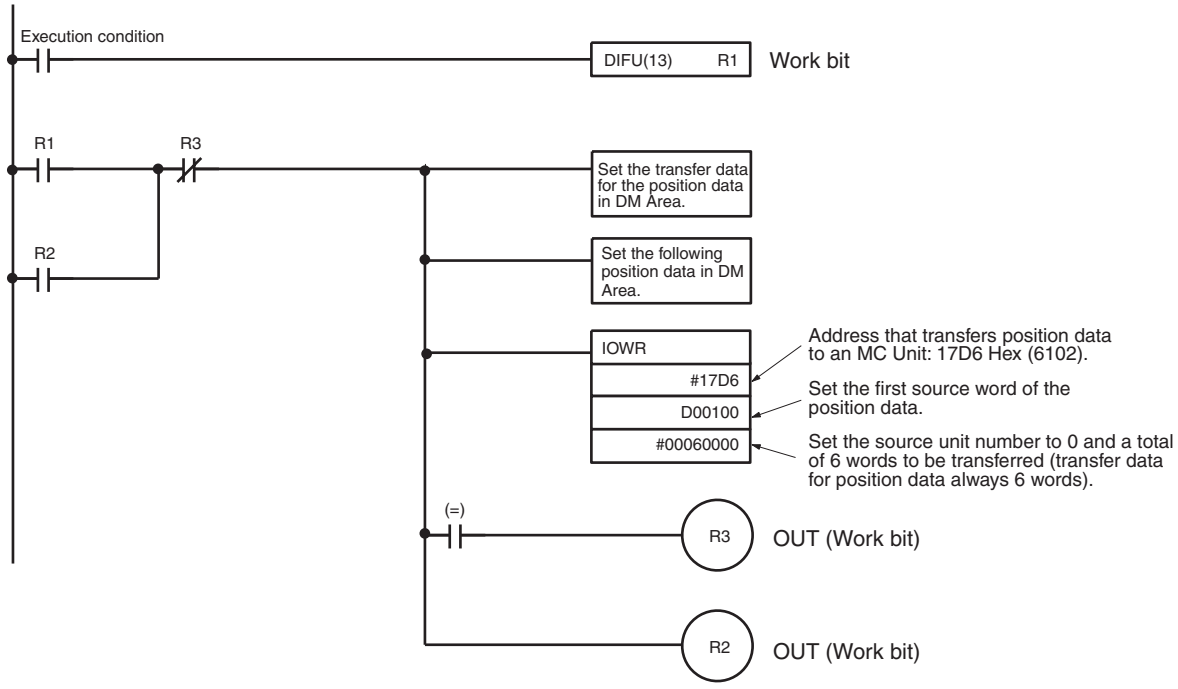

Settings

Transfer Data for Position Data in DM Area and Position Data that will be Transferred from DM Area

D0100	000F	← Total number of words written: 15
D0101	0000	← Always 0000
D0102	00C8	← First source word address for transferred position data: D00200
D0103	0000	← Area storing position data: DM
D0104	01C8	← First address for transferred position data: A0456
D0105	0000	← Always 0000

D0200	0002	
D0201	76D2	← 345678.90.
D0202	020F	
D0203	0002	
D0204	614E	← 123456.78.
D0205	00BC	
D0206	0002	
D0207	7C88	← –387654.32.
D0208	FDB0	
D0209	0003	
D0210	E240	← 123.456.
D0211	0001	
D0212	0002	
D0213	E324	← 54321.00.
D0214	0052	

Three words are required for each position. Refer to *3-4 Position Data* for details.

Example 2

Reading Position Data from A0456 to A0460 Using the Command Area

A total of 2,000 data items or 6,000 words can be read at one time when the command area is used. The following example will read position data for 5 words from an MC Unit.

Position data address		Position data
A0456	→	345678.90
A0457	→	123456.78
A0458	→	–387654.32
A0459	→	123.456
A0460	→	54321.00

Ladder Program

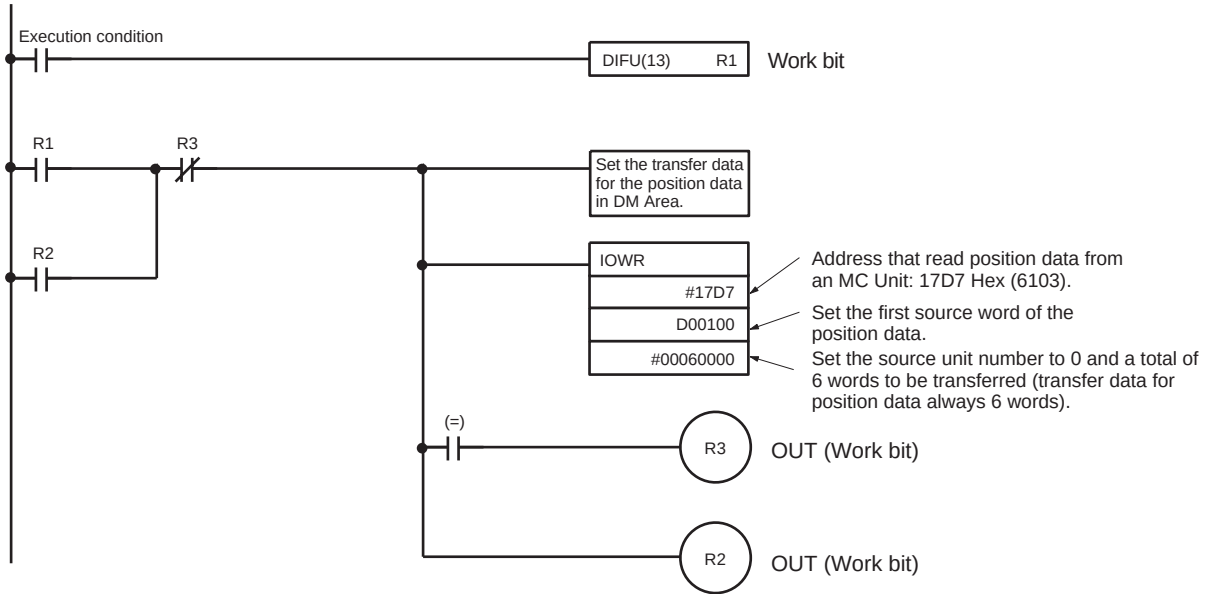

Settings

Transfer Data for Position Data in DM Area

D0100	000F	← Total number of words written: 15
D0101	0000	← Always 0000
D0102	00C8	← First source word address for transferred position data: D00200
D0103	0000	← Area storing position data: DM
D0104	01C8	← First address for transferred position data: A0456
D0105	0000	← Always 0000

Data that Is Read to DM Area

D0200	0002	← 345678.90.
D0201	76D2	
D0202	020F	
D0203	0002	← 123456.78.
D0204	614E	
D0205	00BC	
D0206	0002	← –387654.32.
D0207	7C88	
D0208	FDB0	
D0209	0003	← 123.456.
D0210	E240	
D0211	0001	
D0212	0002	← 54321.00.
D0213	E324	
D0214	0052	

Three words are required for each position. Refer to *3-4 Position Data* for details.

4-3 Saving Data

Transferred position data and system parameters are written to internal MC Unit memory where they will be used, but they will be lost if MC Unit power is turned OFF or the Unit is restarted. The data must be stored in flash memory using the command area to save the data in the MC Unit.

Once the data is saved, it is stored in internal MC Unit flash memory. The data in flash memory will be used the next time MC Unit power is turned ON or the Unit is restarted.

Note

1. Data that has been saved is automatically read to internal memory from flash memory when MC Unit power is turned ON or the Unit is restarted.
2. Do not turn MC Unit power OFF or restart the Unit while data is being saved, or flash memory in the MC Unit may be damaged.

   The number of times that flash memory writes has a limited service life. Data can be written up to 100,000 times.
3. Do not operate the Teaching Box while saving data to flash memory.

4-3-1 Execution

The command area is used to save position data and system parameters to flash memory. Data is saved by specifying the address in control code (C) of the IOWR instruction and transferring the specified data to the MC Unit.

Writing position data to flash memory: Address 6100 (17D4 hex)

Writing system parameters to flash memory: Address 6101 (17D5 hex)

Refer to *Section 3-6 Command Area* for details on the command area.

4-3-2 Command Specifications

This section briefly describes the IOWR instruction specifications when the command area is executed. Refer to *4-2-1 IOWR: INTELLIGENT I/O WRITE* for details.

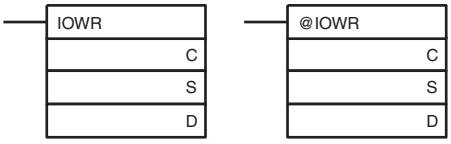

Operand	Description
C	Storing position data to flash memory: 17D4 hex (address 6100) Storing system parameters to flash memory: 17D5 hex (address 6101)
S	Source start word address Sets the first word address of the CPU Unit area with the set data.
D	Sets the destination unit number and total number of words transferred. D+1 D Total number of words transferred | Destination unit number Total number of words transferred: Always 0002 hex (See the following transfer data.) Destination unit number: CS1W-MC221: 0000 to 005D Hex (unit No. 0 to 93) CS1W-MC421: 0000 to 005B Hex (unit No. 0 to 91) Example: When two words of data (fixed) are transferred to unit No. 3: #00020003

Transfer Data

Set the following data starting at the word specified for the source start word address (S) and execute the IOWR instruction.

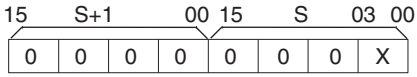

Set X =to 1 (S + 1: 0000, S: 0001) when saving (writing) position data and system parameters to flash memory. S is the source start word address (S) set in the IOWR instruction.

4-3-3 Ladder Program Example

Refer to the following examples of actual data transfer using an MC Unit with the unit number 0 mounted in a CS. In these examples, the IOWR operand and transfer data are both assumed to be correct.

When debugging, write ladder code that will check the Error Flag and bit 14 of word n + 10/n + 18.

Example Saving Position Data to Flash Memory

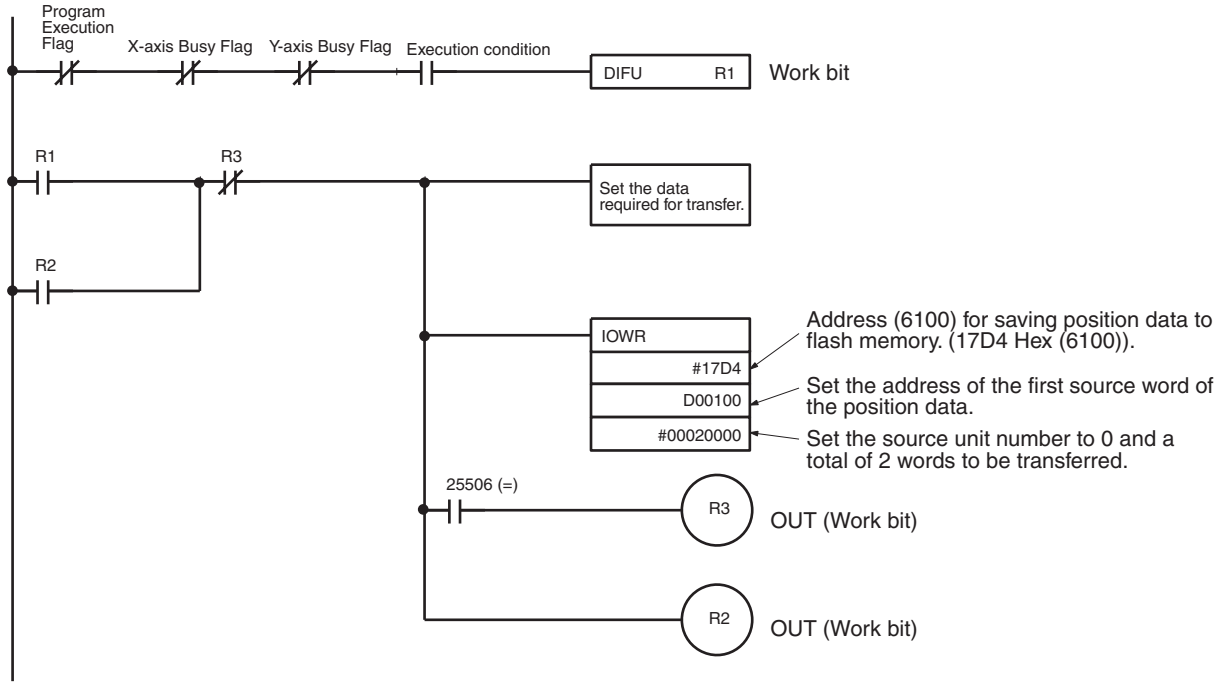

Settings in DM Area

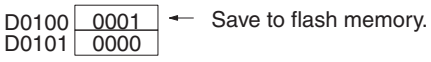

Description

When task 1 is not being executed in memory (Execution Flag OFF) and none of the axes is moving (Busy Flags OFF), then the data will be saved to flash memory.

⚠ **Caution** Do not attempt to save data to flash memory during program execution or while a motor is operating. Doing so can result in unexpected operation.

Note It normally requires from one to two seconds to save data to flash memory, but a maximum of 30 seconds can sometimes be required.

SECTION 5
Exchanging Data with the CPU Unit

This section describes the ways in which data can be transferred between the CPU Unit and the MC Unit, including using the IOWR/IORD instructions, using the PLC Interface Area, and using dedicated bits/flags in memory.

5-1 Overall Structure 224
5-1-1 PLC Interface Area 226
5-1-2 Data Transfer Words 226
5-1-3 Flash Memory 227
5-1-4 Restart Flags 227
5-1-5 MC Unit Initialization 227
5-2 Controlling the MC Unit from the CPU Unit 228
5-2-1 Manual and Automatic Modes 228
5-2-2 Manual Mode 230
5-2-3 Automatic Mode 232
5-3 PLC Interface Area 237
5-3-1 PLC Interface Area Lists 237
5-4 Interface Specifics 260
5-4-1 System Controls 261
5-4-2 Controls Common to All Tasks 265
5-4-3 Task Control Bits 266
5-4-4 Axis Control Bits 279
5-4-5 System Status 301
5-4-6 Task Status 309
5-4-7 Axis Status Flags 318

5-1 Overall Structure

The CPU Unit controls the MC Unit through the PLC Interface Area during I/O refreshing (as shown in the following illustration) and by transferring data to and from the MC Unit when required.

The following example is for the CS1W-MC421. PLC Interface Area addresses for the CS1W-MC221 are shown in parentheses.

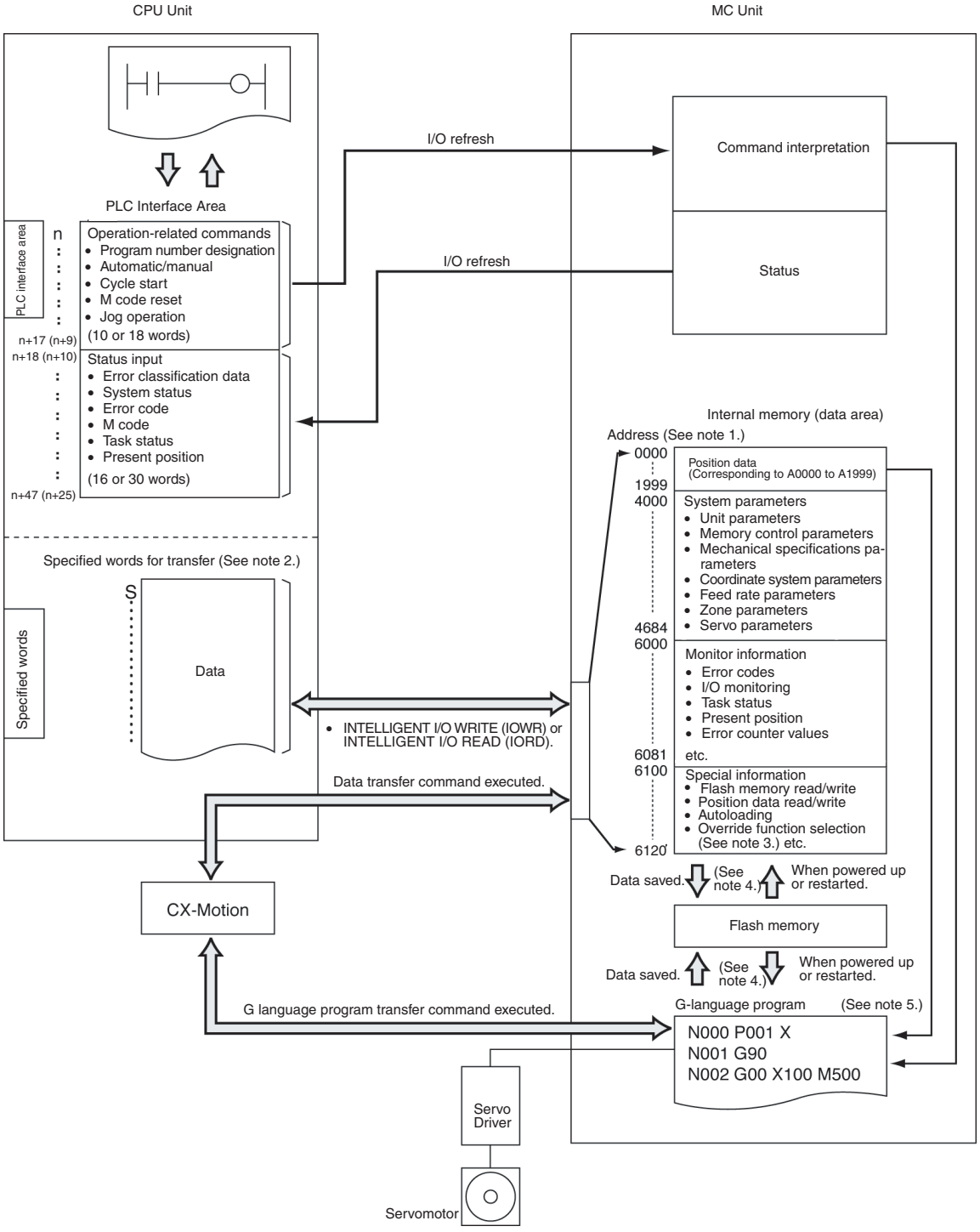

Note

1. With the CS1W-MC221, there are no addresses for task 3, task 4, the Z axis, or the U axis. For the purposes of this illustration, CS1W-MC421 addresses are shown. For details, refer to *Section 3 MC Unit Internal Data Configuration*.
2. Words data transfer are required when IORD or IOWR is used for transferring data between the CPU Unit and the MC Unit.
3. The override function selection (6120) can be used only with Unit Ver. 1.15 or later, and with Units whose model number ends in -V1.
4. Position data, system parameters, and G-language programs are saved to and read from flash memory. Monitor information and special information are not.
5. When positioning by means of a G-language program, the positioning coordinates can be set directly or they can be set indirectly using position data (A0000 to A1999).

The following words and PLC Interface Area are used by the MC Unit.

Name	Details	Reference
PLC Interface Area	When the MC Unit number is set, words are allocated in the CPU Unit's Special I/O Unit relay area. This area is used to output operation commands to the MC Unit and to receive inputs on the operational status of the MC Unit.	pages 224 and 225
Data transfer words	The words designated in the INTELLIGENT I/O WRITE (IOWR) or INTELLIGENT I/O READ (IORD) instruction. When data is transferred between the CPU Unit and the MC Unit, only an area corresponding to the amount of data transferred is used. All data is allocated an address in the MC Unit. Data transfer to and from the data transfer words is performed by specifying a destination address for data writing and specifying an source address for data reading. When a data movement instruction, such as INTELLIGENT I/O WRITE (IOWR) or INTELLIGENT I/O READ (IORD), is executed, data is transferred between these words and the MC Unit's internal memory.	Section 4

The first word allocated as the PLC Interface area is specified as "n" and can be calculated as follows:
n: CIO 2000 + 10 × unit number
The CS1W-MC421 is allocated 50 words and the CS1W-MC221 is allocated 30 words.

S: The first word from which or to which data is transferred for an IOWR or IORD instruction.

5-1-1 PLC Interface Area

Words are allocated in the Special I/O Unit Area of the CPU Unit.
The CS1W-MC421 is allocated 50 words and the CS1W-MC221 is allocated 30 words.

CS1W-MC221

Unit #0	CIO 2000 to CIO 2029
Unit #1	CIO 2010 to CIO 2039
Unit #2	CIO 2020 to CIO 2049
Unit #3	CIO 2030 to CIO 2059
	to
	Words n to n + 29
	to
Unit #90	CIO 2900 to CIO 2929
Unit #91	CIO 2910 to CIO 2939
Unit #92	CIO 2920 to CIO 2949
Unit #93	CIO 2930 to CIO 2959
Unit #94	Cannot be set.
Unit #95	Cannot be set.

n: CIO 2000 + 10 × unit number

I/O:	Word address
Output:	n to n + 9
Input:	n + 10 to n + 25
	n + 26 to n + 29 (Reserved)

CS1W-MC421

Unit #0	CIO 2000 to CIO 2049
Unit #1	CIO 2010 to CIO 2059
Unit #2	CIO 2020 to CIO 2069
Unit #3	CIO 2030 to CIO 2079
	to
	Words n to n + 49
	to
Unit #90	CIO 2900 to CIO 2949
Unit #91	CIO 2910 to CIO 2959
Unit #92	Cannot be set.
Unit #93	Cannot be set.
Unit #94	Cannot be set.
Unit #95	Cannot be set.

n: CIO 2000 + 10 × unit number

I/O:	Word address
Outputs:	n to n + 17
Inputs:	n + 18 to n + 47
	n + 48 to n + 49 (Reserved)

Note

1. The CS1W-MC221 is allocated the words for three unit numbers in the above area and the CS1W-MC421 is allocated the words for five unit numbers. The numbers following that of the set unit number are also allocated to the MC Unit.
2. Because the CS1W-MC221 is allocated three unit numbers, it cannot be assigned unit numbers 94 and 95.
3. Because the CS1W-MC421 is allocated five unit numbers, it cannot be assigned unit numbers 92 to 95.
4. Make sure that the same unit numbers are not used by other Special I/O Units.

5-1-2 Data Transfer Words

The first word for transfer is designated in the INTELLIGENT I/O WRITE (IOWR) or INTELLIGENT I/O READ instruction. When data is transferred between the CPU Unit and the MC Unit, only words for the amount of data transferred are used.
Refer to *Section 4 Data Transfer and Storage* for details on the data transfer words.

5-1-3 Flash Memory

The contents of the MC Unit's internal memory are lost when the power to the MC Unit is turned OFF or when the MC Unit is restarted. Internal memory contents can be saved in flash memory using data save operations.

The following types of data can be stored in flash memory.

- Position data
- System parameters
- G-language programs

Note Refer to *4-3 Saving Data* for details.

5-1-4 Restart Flags

A Restart Flag can be turned ON and then OFF to restart the MC Unit without turning the power OFF and back ON again.

Bit address	Function
A50200 to A50215	Restart Flags for Units 0 to 15
A50300 to A50315	Restart Flags for Units 16 to 31
A50400 to A50415	Restart Flags for Units 32 to 47
A50500 to A50515	Restart Flags for Units 48 to 63
A50600 to A50615	Restart Flags for Units 64 to 79
A50700 to A50715	Restart Flags for Units 80 to 95

5-1-5 MC Unit Initialization

Initial processing is performed for the MC Unit when the power is turned ON or when the Unit is restarted. During initial processing, commands from the CPU Unit cannot be received and will be ignored.

When MC Unit initial processing is being executed, the Special I/O Unit Initialization Flag will be turned ON.

When the MC Unit is started up immediately after power to the PLC is turned ON, confirm that the Special I/O Unit Initialization Flag is OFF before continuing with operation.

Bit address	Function
A33000 to A33015	Initialization Flags for Units 0 to 15
A33100 to A33115	Initialization Flags for Units 16 to 31
A33200 to A33215	Initialization Flags for Units 32 to 47
A33300 to A33315	Initialization Flags for Units 48 to 63
A33400 to A33415	Initialization Flags for Units 64 to 79
A33500 to A33515	Initialization Flags for Units 80 to 95

Note

1. Make sure that the correct data is used.
2. Confirm the safety of the equipment before attempting to make changes to the PLC Interface Area settings.

5-2 Controlling the MC Unit from the CPU Unit

This section describes the CPU Unit ladder program that controls the MC Unit in Manual Mode or Automatic Mode.

5-2-1 Manual and Automatic Modes

There are two ways to control the MC Unit: Manual Mode or Automatic Mode. The mode can be changed using the Automatic/Manual Mode Bit in the PLC Interface Area. The mode can be set for each task. ON: Automatic Mode, OFF: Manual Mode.

In Manual Mode, the following functions can be used to control each axis. Refer to the references listed in the table for more information, including timing charts and ladder programming examples.

Function	Reference
Deceleration Stop	280
Origin Searches	281, Section 10
Reference Origin Returns	282
Jogging	283
Resetting the Error Counter (See note 1.)	284
Setting the Origin	290
Setting the Absolute Origin	291, Section 10
Enabling MPG/Sync Encoder	292
Servo-lock (See note 1.)	293
Servo-unlock (See note 2.)	296
Presetting the Present Position	364

Note

1. Resetting the Error Counter and Servo-unlock operations can also be performed in Automatic Mode.
2. Presetting the Present Position is performed using the IOWR instruction.

Automatic Mode uses G-language programs in the MC Unit.

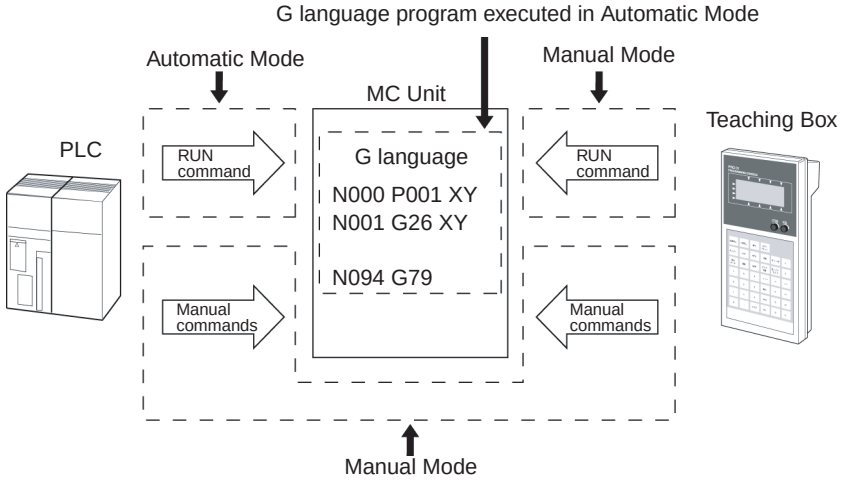

Automatic/Manual Mode Bit

The Automatic/Manual Mode Bit is allocated for each task in the following PLC Interface Area words.

Name	MCU Model	Word				Bit	Description
		Task 1	Task 2	Task 3	Task 4		
Automatic/ Manual Mode Bit	MC421 MC221	n+3 n+3	n+5 n+5	n+7 ---	n+9 ---	01	↑ : All axes in manual operation decelerate to a stop. 1 : Automatic Mode ↓ : Stops MC program execution. All axes in operation decelerate to a stop. 0 : Manual Mode

To execute commands in Manual Mode, turn OFF the bit. To execute MC programs in Automatic Mode, turn ON the bit.

Refer to *5-3 PLC Interface Area* for details on the Automatic/Manual Mode Bit.

Notation

Bit status is indicated as follows in the above table:

↑: A transition in the bit from 0 (OFF) to 1 (ON) (See note.)
↓: A transition in the bit from 1 (ON) to 0 (OFF) (See note.)
1: ON
0: OFF

Note Transitions in bits are determined in the MC Unit and are not always detectable when using the DIFU and DIFD instructions in the program in the CPU Unit.

5-2-2 Manual Mode

In Manual Mode, the following commands can be used to control each axis independently through the PLC Interface Area.

Name of bit	Model	PLC Interface Area				Bit	Description
		X-axis	Y-axis	Z-axis	U-axis		
Servo-unlock	MC421	n+11	n+13	n+15	n+17	10	↑ : Starts servo-unlock.
	MC221	n+7	n+9	---	---		
Deceleration Stop					n+17	00	↑ : Starts deceleration stop in manual operation.
	MC421	n+11			----		1 : Does not accept other commands in Manual Mode.
	MC221	n+7					
Error Counter Reset						04	↑ : Resets error counter to zero.
Origin Search						01	↑ : Starts manual origin search. ↓ : Stops manual origin search.
Reference Origin Return						02	↑ : Starts manual origin return. ↓ : Stops manual origin return.
Jogging						03	↑ : Starts jogging operation. ↓ : Stops jogging operation.
Forced Origin Set						05	↑ : Starts forced origin set.
Absolute Origin Set						06	↑ : Sets the absolute origin.
Enable MPG						08	↑ : Starts MPG operation. ↓ : Stops MPG operation.
Servo-lock						09	↑ : Starts servo-lock.



Each command is executed on the OFF to ON transition of its control bit. When more than one command is executed at the same time, the commands will be processed in the above order of priority. The following table shows the meanings when the control bits are ON or OFF.

Command	ON (1)	OFF (0)
Deceleration Stop	Stops reception of other commands. (See note.)	---
Origin Search	Continues operation.	Stops operation.
Reference Origin Return		
Jogging		
Enable MPG		

Note The Error Counter Reset and Servo-unlock commands can be executed in Automatic Mode as well as Manual Mode. Consequently, the commands are executable when the Deceleration Stop Bit is turned ON.

Executing the Deceleration Stop command has no effect when no other commands are being executed, but no other commands except the Error Counter

Reset and Servo-unlock commands can be received while the Deceleration Stop command is ON.

The Origin Search, Reference Origin Return, Jogging, and Enable MPG commands are executed on the OFF to ON transition of the bit status, and continue operation while the control bit is ON.

To interrupt operation, turn the control bit OFF or execute the Deceleration Stop command.

Operation of the Error Counter Reset, Forced Origin Set, ABS Initialization, Servo-lock, or Servo-unlock commands cannot be stopped. These commands are executed to completion once the control bit has been turned ON.

Command Combinations

The following table shows which commands can be executed while other commands are being executed. The symbols (❍: OK; ×: Not possible) indicate whether the corresponding command at the top of the table can be made while the corresponding command on the left side of the table is being executed.

Command being executed	Deceleration Stop	Origin Search	Reference Origin Return	Jogging	Error Counter Reset	Forced Origin Set	ABS Initialization	Enable MPG	Servo-lock	Servo-unlock	Present Position Preset
Deceleration Stop		×	×	×	❍	×	×	×	×	❍	×
Origin Search	❍		×	×	❍	×	×	×	×	❍	×
Reference Origin Return	❍	×		×	❍	×	×	×	×	❍	×
Jogging	❍	×	×		❍	×	×	×	×	❍	×
Error Counter Reset	❍	×	×	×	❍		×	×	×	❍	×
Forced Origin Set	×	×	×	×		×	×	×	×	❍	×
ABS Initialization	×	×	×	×	❍	×		×	×	❍	×
Enable MPG	❍	×	×	×	❍	×	×		×	❍	×
Servo-lock	×	×	×	×	❍	×	×	×		❍	×
Servo-unlock	×	×	×	×	❍	×	×	×	×		×
Present Position Preset	×	×	×	×	❍	×	×	×	×	❍	

Busy Flag

The Busy Flag is turned ON when a command is being executed, and turned OFF when the command is completed. Deceleration Stop is the only command that can be received while this flag is ON.

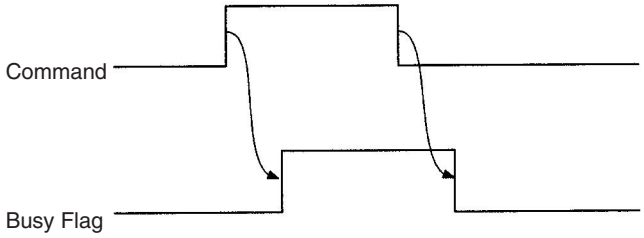

Sequence programs should be written so that other commands will not be executed while the commands that cannot be interrupted (Error Counter Reset, Forced Origin Set, ABS Initialization, Servo-lock, and Servo-unlock) are being executed.

⚠ **Caution** After executing a command, do not execute another command until the first command has been completed and the Busy Flag has turned OFF.

5-2-3 Automatic Mode

The MC program is executed in Automatic Mode. Use the following procedure to operate in Automatic Mode.

The example provided here is for task 1.

1,2,3...

1. Set the MC Unit to Automatic Mode by turning ON bit 01 of word n+3.
2. Set the program number of the program to be executed. (Word n+2)
3. Turn ON the Program Number Read Bit (bit 07 of word n+3) so that the program number set in word n+2 will be read by the MC Unit.
4. Turn ON the Cycle Start Bit (bit 02 of word n+3) so that the program corresponding to the program number set in word n+2 will be executed.

The corresponding bits for tasks 2 to 4 are shown in the following table.

Task	Automatic Mode	Program number set	Program number read	Cycle start
1	Bit 01 of word n+3	Word n+2	Bit 07 of word n+3	Bit 02 of word n+3
2	Bit 01 of word n+5	Word n+4	Bit 07 of word n+5	Bit 02 of word n+5
3	Bit 01 of word n+7	Word n+6	Bit 07 of word n+7	Bit 02 of word n+7
4	Bit 01 of word n+9	Word n+8	Bit 07 of word n+9	Bit 02 of word n+9

Ladder Programming Example for Executing an MC Program

The following program is an example of the kind of ladder program used to execute an MC program. This program is the minimum required to execute the MC program. Add the program elements needed for your actual application.

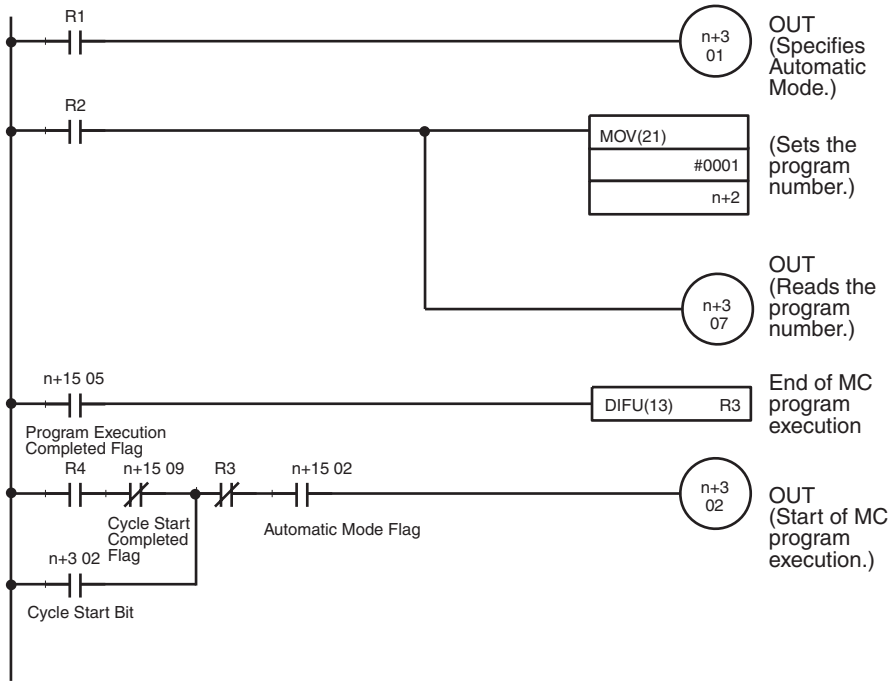

Use work bits for inputs R1, R2, R3, and R4.

In the sample program, program number P001 is executed in task 1. Change the task and program number if necessary.

Program Flow

Turn ON input R1 to specify Automatic Mode.

Turn ON input R2 in the following situations:

- The first time that the program is executed after the power is turned ON.
- When executing the program from the beginning.
- When the program number has been changed.

Execution of the MC program will begin when R4 goes ON.

Program Execution Flag

The Program Execution Flag is equivalent to the Manual Mode's Busy Flag. This flag is ON while the MC program is being executed; it is OFF when program execution is completed or stopped.

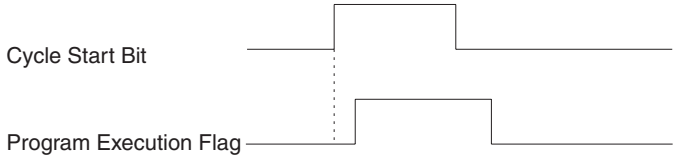

Program Execution Completed Flag

The Program Execution Completed Flag goes ON when the MC program has been completed. The Program Execution Flag will go OFF when this flag is turned ON, even if the Cycle Start Bit remains ON.

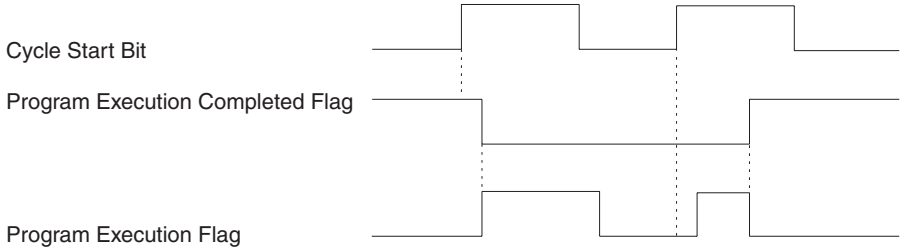

Related Bits

Name of bit	Model	PLC Interface Area				Bit	Description
		Task 1	Task 2	Task 3	Task 4		
Program Number	MC421 MC221	n+2 n+2	n+4 n+4	n+6 ---	n+8 ---	00 to 15	Sets the program number for each task. (0000 to 03E7 hex)
Automatic/ Manual Mode Bit	MC421 MC221	n+3 n+3	n+5 n+5	n+7 ---	n+9 ---	01	↑ : All axes in manual operation decelerate to a stop. 1 : Automatic Mode ↓ : Stops program execution. All axes in operation decelerate to a stop. 0 : Manual Mode
Cycle Start Bit						02	↑ : Starts program execution. 1 : Continues program execution. 0 : Stops program execution.
Program Number Read Bit						07	1 : Reads the program number.

Name of bit	Model	PLC Interface Area				Bit	Description
		Task 1	Task 2	Task 3	Task 4		
Automatic Mode Flag	MC421 MC221	n+23 n+15	n+27 n+19	n+30 ---	n+34 ---	02	1 : The Unit is in Automatic Mode. 0 : Mode other than the above.
Program Execution Flag						04	1 : Program execution 0 : Other than the above
Program Execution Completed Flag						05	1 : Program execution completed. 0 : Program execution not completed.
Cycle Start Received Flag						09	1 : The Cycle Start Signal was received. 0 : The Cycle Start Signal is OFF.

Notation Bit status is indicated as follows in the above table:

↑: A transition in the bit from 0 (OFF) to 1 (ON) (See note.)

↓: A transition in the bit from 1 (ON) to 0 (OFF) (See note.)

1: ON

0: OFF

Note Transitions in bits are determined in the MC Unit and are not always detectable when using the DIFU and DIFD instructions in the program in the CPU Unit.

Ladder Programming Example and Timing Chart

A ladder programming example to execute an MC program (with pause) and its timing chart are provided below.

Ladder Programming Example

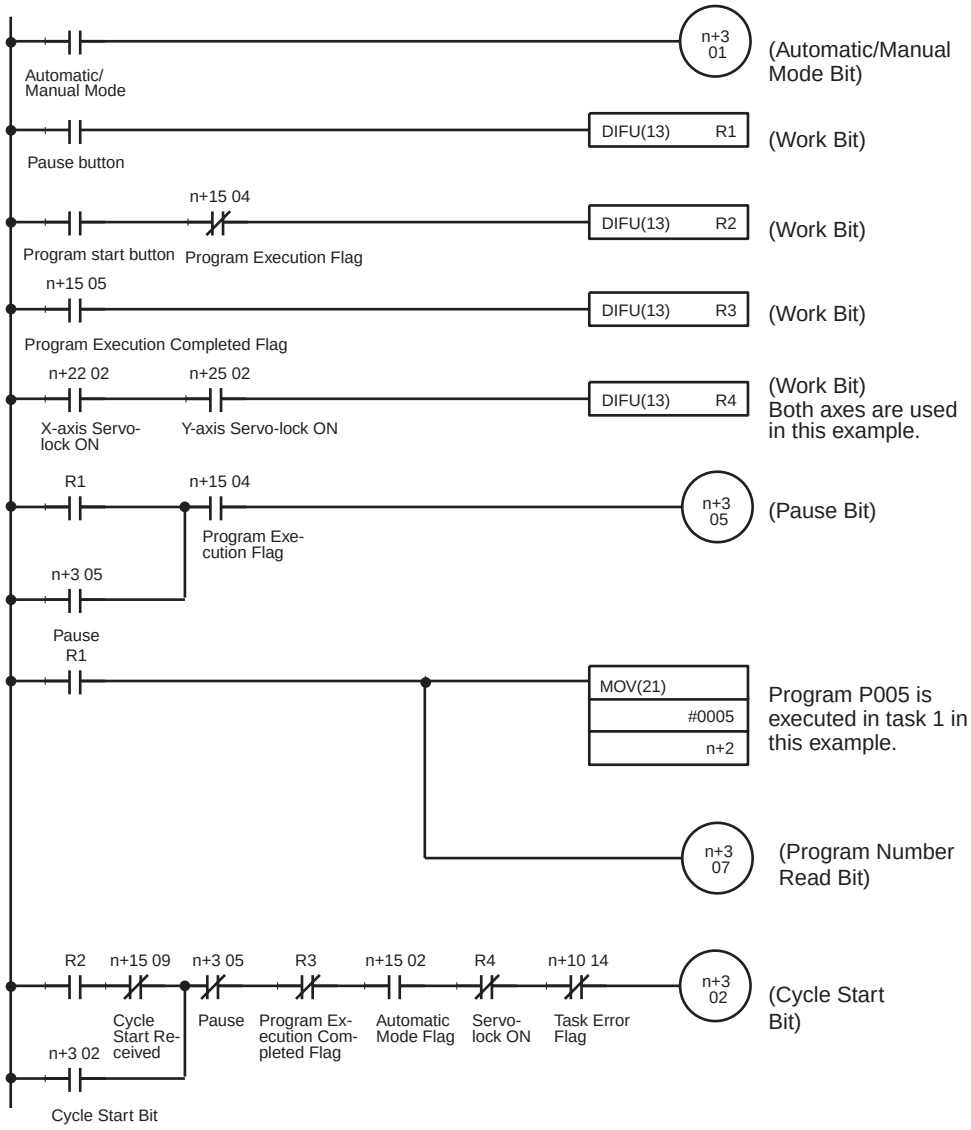

The above ladder program is a sample program for task 1.

⚠ **Caution** When executing a positioning command with an MC program, all the affected axes must be servo-locked (i.e., the Servo-lock Bit must be ON). Therefore, be sure to include the above R4 condition.

Word Allocations for Programming Example

Item	MC221 Unit #0	MC421 Unit #0
R1 (Work Bit)	W50001	
R2 (Work Bit)	W50002	
R3 (Work Bit)	W50003	
R4 (Work Bit)	W50004	
Automatic/Manual Mode Bit (n+3 01)	CIO 200301	CIO 200301
Cycle Start Bit (n+3 02)	CIO 200302	CIO 200302
Pause Bit (n+3 05)	CIO 200305	CIO 200305
Program Number Read Bit (n+3 07)	CIO 200307	CIO 200307
Task Error Flag (n+10 14)	CIO 201014	CIO 201814
Automatic Mode Flag (n+15 04)	CIO 201502	CIO 202302
Program Execution Flag (n+15 02)	CIO 201504	CIO 202304
Program Execution Completed Flag (n+15 05)	CIO 201505	CIO 202305
Cycle Start Received Flag (n+15 09)	CIO 201509	CIO 202309
Automatic/Manual Mode	CIO 000100	
Program start button	CIO 000101	
Pause button	CIO 000102	

Timing Chart

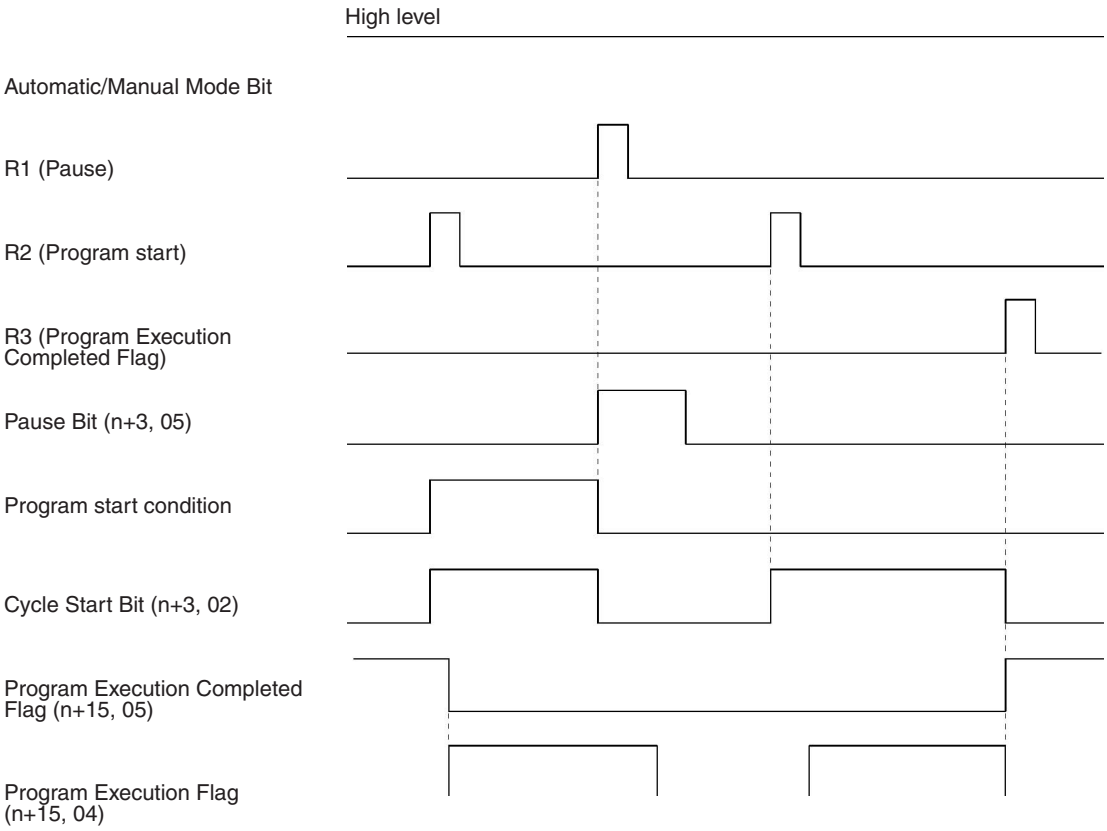

5-3 PLC Interface Area

The PLC Interface Area is allocated in CPU Unit memory according to the Unit No. Setting Switch settings on the front of the MC Unit. The CS1W-MC421 is allocated 50 words and CS1W-MC221 is allocated 30 words.

5-3-1 PLC Interface Area Lists

The symbols listed indicate the following for bit status in the table below.
↑: Bit changes from 0 (OFF) to 1 (ON). (See note.)
↓: Bit changes from 1 (ON) to 0 (OFF). (See note.)
1: ON.
0: OFF

Note For outputs, this is determined by the MC Unit, and not the CPU Unit, so in some cases it may be rejected using the DIFU/DIFD instructions.

CS1W-MC221

CS1W-MC221 PLC Interface Area Outputs (CPU Unit to MC Unit) n = CIO 2000 + 10 x unit number (words)

Word	Contents	Bit	Description			Page
n	System Controls	00	General Output 1/Brake Output X	1	Output port turned ON.	261
				0	Output port turned OFF.	
		01	General Output 2/Brake Output Y	1	Output port turned ON.	261
				0	Output port turned OFF.	
		02	General Output 3	1	Output port turned ON.	261
				0	Output port turned OFF.	
		03	General Output 4	1	Output port turned ON.	261
				0	Output port turned OFF.	
		04	Not used.			---
		05	Autoloading Error Reset Bit	↑	Reset an autoloading error.	262
		06	Not used.			---
		07	Error Counter Function Selection Bit	1	Error counter warning	263
				0	Error counter error detection	
		08 to 13	Not used.			---
		14	Error Reset Bit	↑	Resets an error.	265
		15	Not used.			---

CS1W-MC221 PLC Interface Area Outputs (CPU Unit to MC Unit) n = CIO 2000 + 10 x unit number (words)

Word	Contents	Bit	Description			Page
n+1	Controls Common to All Tasks	00	Optional Input 0	1	Optional Input 0 turned ON.	265
				0	Optional Input 0 turned OFF.	
		01	Optional Input 1	1	Optional Input 1 turned ON.	265
				0	Optional Input 2 turned OFF.	
		02	Optional Input 2	1	Optional Input 2 turned ON.	265
				0	Optional Input 2 turned OFF.	
		03	Optional Input 3	1	Optional Input 3 turned ON.	265
				0	Optional Input 3 turned OFF.	
		04	Optional Input 4	1	Optional Input 4 turned ON.	265
				0	Optional Input 4 turned OFF.	
		05	Optional Input 5	1	Optional Input 5 turned ON.	265
				0	Optional Input 5 turned OFF.	
		06	Optional Input 6	1	Optional Input 6 turned ON.	265
				0	Optional Input 6 turned OFF.	
		07	Optional Input 7	1	Optional Input 7 turned ON.	265
				0	Optional Input 7 turned OFF.	
		08	Optional Input 8	1	Optional Input 8 turned ON.	265
				0	Optional Input 8 turned OFF.	
		09	Optional Input 9	1	Optional Input 9 turned ON.	265
				0	Optional Input 9 turned OFF.	
		10	Optional Input 10	1	Optional Input 10 turned ON.	265
				0	Optional Input 10 turned OFF.	
		11	Optional Input 11	1	Optional Input 11 turned ON.	265
				0	Optional Input 11 turned OFF.	
		12	Optional Input 12	1	Optional Input 12 turned ON.	265
				0	Optional Input 12 turned OFF.	
		13	Optional Input 13	1	Optional Input 13 turned ON.	265
				0	Optional Input 13 turned OFF.	
		14	Optional Input 14	1	Optional Input 14 turned ON.	265
				0	Optional Input 14 turned OFF.	
		15	Optional Input 15	1	Optional Input 15 turned ON.	265
				0	Optional Input 15 turned OFF.	

CS1W-MC221 PLC Interface Area Outputs (CPU Unit to MC Unit) n = CIO 2000 + 10 x unit number (words)

Word	Contents	Bit	Description			Page
n+2	Control Bits for Task 1	00 to 15	Task 1 program number 0000 to 03E7 (4-digit Hex) (Decimal: 0000 to 0999) 0 | $x16^2$ | $x16^1$ | $x16^0$ Specifies program number executed in Automatic Mode. If the Program Number Read Bit is ON, the program number will be read when the Cycle Start Bit is turned ON and the specified program will be executed from the beginning.			266
n+3		00	Not used.			---
		01	Automatic/Manual Mode	↑	Any axes operating in Manual Mode will decelerate to a stop.	267
				1	Automatic Mode	
				↓	When the MC program is being executed, it will be stopped and any operating axes will decelerate to a stop.	
				0	Manual Mode	
		02	Cycle Start Bit	↑	Starts MC program execution.	268
				1	Continues MC program execution.	
				0	Stops MC program execution.	
		03	Single Block	1	Executes one block.	272
		04	Forced Block End	↑	Forces an end to the block.	273
				1	Prohibits cycle start.	
		05	Pause	↑	Pauses execution.	274
				1	Prohibits cycle start.	
		06	M Code Reset Bit	↑	Resets the M code.	275
				1	M code reset standby. (Prohibits M code output.) Maintains status.	
				↓	Clears standby status and starts executing the next command.	
		07	Program Number Read Bit	1	Reads the program number.	277
		08	Not used.			---
		09	Teaching Bit	↑	Starts teaching.	277
		10	Teaching Type Bit	1	Present position (feedback value)	278
				0	Target position	
		11 to 15	Not used.			---

CS1W-MC221 PLC Interface Area Outputs (CPU Unit to MC Unit) n = CIO 2000 + 10 x unit number (words)

Word	Contents	Bit	Description			Page
n+4	Control Bits for Task 2	00 to 15	Task 2 program number 0000 to 03E7 (4-digit Hex) (Decimal: 0000 to 0999) 0 | $x10^2$ | $x10^1$ | $x10^0$ Specifies the program number executed in Automatic Mode. If the Program Number Read Bit is ON, the program number will be read when the Cycle Start Bit is turned ON and the specified program will be executed from the beginning.			266
n+5		00	Not used.			---
		01	Automatic/Manual Mode	↑	Any axes operating in Manual Mode will decelerate to a stop.	267
				1	Automatic Mode	
				↓	When the MC program is being executed, it will be stopped and any operating axes will decelerate to a stop.	
				0	Manual Mode	
		02	Cycle Start Bit	↑	Starts MC program execution.	268
				1	Continues MC program execution.	
				0	Stops MC program execution.	
		03	Single Block	1	Executes one block.	272
		04	Forced Block End	↑	Forces an end to the block.	273
				1	Prohibits cycle start.	
		05	Pause	↑	Pauses execution.	274
				1	Prohibits cycle start.	
		06	M Code Reset Bit	↑	Resets the M code.	275
				1	M code reset standby. (Prohibits M code output.) Maintains status.	
				↓	Clears standby and starts executing the next command.	
		07	Program Number Read Bit	1	Reads the program number.	277
		08	Not used.			---
		09	Teaching Bit	↑	Starts teaching.	277
		10	Teaching Type Bit	1	Present position (feedback value)	278
				0	Target position	
		11 to 15	Not used.			---
n+6	X-axis Control Bits	00 to 15 (Manual/ Auto)	X-axis override 0001 to 07CF (4-digit Hex) (Decimal: 0001 to 1999) Decimal: 0001 to 1999 → 0.1% to 199.9% (0.1% increments) $x16^3$ | $x16^2$ | $x16^1$ | $x16^0$ Specifies the override for axis operations. This override value is used while the override setting is enabled.			279

CS1W-MC221 PLC Interface Area Outputs (CPU Unit to MC Unit) n = CIO 2000 + 10 x unit number (words)

Word	Contents	Bit	Description			Page
n+7	X-axis Control Bits	00 (Manual)	Deceleration Stop	↑	Deceleration Stop	280
				1	Prohibits other manual commands.	
		01 (Manual)	Origin Search	↑	Starts the origin search.	281
				1	Continues the origin search.	
				↓	Stops the origin search.	
		02 (Manual)	Reference Origin Return	↑	Starts moving the axis to the reference origin.	282
				1	Continues movement.	
				↓	Stops movement.	
		03 (Manual)	Jogging	↑	Starts jog operation.	283
				1	Continues jog operation.	
				↓	Stops jog operation.	
		04 (Manual/ Auto)	Error Counter Reset	↑	Starts error counter reset.	284
				1	Prohibits MC program execution.	
				↓	Continues MC program execution.	
				0	All functions can be used.	
		05 (Manual)	Forced Origin	↑	Set the present position as the origin.	290
		06 (Manual)	Absolute Origin Set	↑	Sets the origin for the absolute encoder.	291
		07 (Manual)	Not used.			---
		08 (Manual)	Enable MPG/Sync Encoder	↑	Starts MPG/sync encoder operation.	292
				1	Continues MPG/sync encoder operation.	
				↓	Stops MPG/sync encoder operation.	
		09 (Manual)	Servo-lock	↑	Locks the servo.	293
		10 (Manual/ Auto)	Servo-unlock	↑	Clears the servo lock. (Enables normal reception.)	296
		11 (Manual/ Auto)	Driver Alarm Reset	1	Turns ON the driver alarm reset output.	298
				0	Turns OFF the driver alarm reset output.	
		12 (Manual/ Auto)	Override Setting	1	Enables the override setting.	299
				0	Disables the override setting.	
		13 (Manual)	Jog direction	1	Specifies negative direction for jogging.	300
				0	Specifies positive direction for jogging.	
		14 (Manual)	MPG/Sync Encoder Ratio Specifier 1	15 14 0 0 Sets MPG/sync encoder ratio (1) 0 1 Sets MPG/sync encoder ratio (2) 1 0 Sets MPG/sync encoder ratio (3) 1 1 Sets MPG/sync encoder ratio (4)		301
		15 (Manual)	MPG/Sync Encoder Ratio Specifier 2			301

CS1W-MC221 PLC Interface Area Outputs (CPU Unit to MC Unit) n = CIO 2000 + 10 x unit number (words)

Word	Contents	Bit	Description	Page
n+8	Y-axis Control Bits	00 to 15 (Manual/ Auto)	Y-axis override 0001 to 07CF (4-digit Hex) (Decimal: 0001 to 1999) Decimal: 0001 to 1999 → 0.1% to 199.9% (0.1% increments) $x16^3$ | $x16^2$ | $x16^1$ | $x16^0$ Specifies the override for axis operations. This override value is used while the override setting is enabled.	279

CS1W-MC221 PLC Interface Area Outputs (CPU Unit to MC Unit) n = CIO 2000 + 10 x unit number (words)

Word	Contents	Bit	Description			Page
n+9	Y-axis Control Bits	00 (Manual)	Deceleration Stop	↑	Deceleration Stop	280
				1	Prohibits other manual commands.	
		01 (Manual)	Origin Search	↑	Starts the origin search.	281
				1	Continues the origin search.	
				↓	Stops the origin search.	
		02 (Manual)	Reference Origin Return	↑	Starts moving the axis to the reference origin.	282
				1	Continues movement.	
				↓	Stops movement.	
		03 (Manual)	Jogging	↑	Starts jog operation.	283
				1	Continues jog operation.	
				↓	Stops jog operation.	
		04 (Manual/ Auto)	Error Counter Reset	↑	Starts error counter reset.	284
				1	Prohibits MC program execution.	
				↓	Continues MC program execution.	
				0	All functions can be used.	
		05 (Manual)	Forced Origin	↑	Set the present position as the origin.	290
		06 (Manual)	Absolute Origin Set	↑	Executes ABS Initialization	291
		07	Not used.			---
		08 (Manual)	Enable MPG/Sync Encoder	↑	Starts MPG/sync encoder operation.	292
				1	Continues MPG/sync encoder operation.	
				↓	Stops MPG/sync encoder operation.	
		09 (Manual)	Servo-lock	↑	Locks the servo.	293
		10 (Manual/ Auto)	Servo-unlock	↓	Clears the servo lock.	296
		11 (Manual/ Auto)	Driver Alarm Reset	1	Turns ON the driver alarm reset output.	298
				0	Turns OFF the driver alarm reset output.	
		12 (Manual/ Auto)	Override Setting	1	Enables the override setting.	299
				0	Disables the override setting.	
		13 (Manual)	Jog direction	1	Specifies negative direction for jogging.	300
				0	Specifies positive direction for jogging.	
		14 (Manual)	MPG Sync Encoder Ratio Specifier 1	15 14 0 0 0 1 1 0 1 1	Sets MPG/sync encoder ratio (1) Sets MPG/sync encoder ratio (2) Sets MPG/sync encoder ratio (3) Sets MPG/sync encoder ratio (4)	301
		15 (Manual)	MPG Sync Encoder Ratio Specifier 2			301

CS1W-MC221 PLC Interface Area Inputs (MC Unit to CPU Unit) n = CIO 2000 + 10 x unit number (words)

<table>
<tr><th>Word</th><th>Contents</th><th>Bit</th><th colspan="4">Description</th><th>Page</th></tr>
<tr><td>n+10</td><td>System Status</td><td>00 to 03</td><td colspan="4">Error Type Data
<table><tr><th colspan="4">Bits</th><th>Error</th><th>Remarks</th></tr><tr><th>03</th><th>02</th><th>01</th><th>00</th><th></th><th></th></tr><tr><td>0</td><td>0</td><td>0</td><td>0</td><td>Normal</td><td>Error Flag will be OFF.</td></tr><tr><td>0</td><td>0</td><td>0</td><td>1</td><td>System error</td><td rowspan="10">Error Flag will turn ON too.</td></tr><tr><td>0</td><td>0</td><td>1</td><td>0</td><td>Task 1 error</td></tr><tr><td>0</td><td>0</td><td>1</td><td>1</td><td>Task 2 error</td></tr><tr><td>0</td><td>1</td><td>0</td><td>0</td><td>Not used.</td></tr><tr><td>0</td><td>1</td><td>0</td><td>1</td><td>Not used.</td></tr><tr><td>0</td><td>1</td><td>1</td><td>0</td><td>X-axis error</td></tr><tr><td>0</td><td>1</td><td>1</td><td>1</td><td>Y-axis error</td></tr><tr><td>1</td><td>0</td><td>0</td><td>0</td><td>Not used.</td></tr><tr><td>1</td><td>0</td><td>0</td><td>1</td><td>Not used.</td></tr></table>When an error occurs, an error output indicating the error type will be turned ON and will remain valid until the error is corrected.</td><td>301</td></tr>
<tr><td></td><td></td><td>04</td><td>Autoloading</td><td>1</td><td>Autoloading started.</td><td>302</td></tr>
<tr><td></td><td></td><td></td><td></td><td>↓</td><td>Autoloading ended.</td><td></td></tr>
<tr><td></td><td></td><td>05</td><td>Autoloading Error</td><td>1</td><td>An error occurred during autoloading.</td><td>303</td></tr>
<tr><td></td><td></td><td></td><td></td><td>↓</td><td>Autoloading Error Reset has been turned from ON.</td><td></td></tr>
<tr><td></td><td></td><td>06</td><td>Data Transmission</td><td>1</td><td>Data is being transmitted.</td><td>304</td></tr>
<tr><td></td><td></td><td></td><td></td><td>↓</td><td>Data transmission has been completed.</td><td></td></tr>
<tr><td></td><td></td><td>07</td><td>Data Transmission Error</td><td>1</td><td>An error occurred during data transmission.</td><td>304</td></tr>
<tr><td></td><td></td><td></td><td></td><td>↓</td><td>Data has been retransmitted normally.</td><td></td></tr>
<tr><td></td><td></td><td>08</td><td>Data Reception</td><td>1</td><td>Data is being received.</td><td>304</td></tr>
<tr><td></td><td></td><td></td><td></td><td>↓</td><td>Data reception has been completed.</td><td></td></tr>
<tr><td></td><td></td><td>09</td><td>Data Reception Error</td><td>1</td><td>An error occurred during data reception.</td><td>305</td></tr>
<tr><td></td><td></td><td></td><td></td><td>↓</td><td>Resent data has been received normally.</td><td></td></tr>
<tr><td></td><td></td><td>10</td><td>Flash Memory Write</td><td>1</td><td>Data is being written to the flash memory.</td><td>305</td></tr>
<tr><td></td><td></td><td></td><td></td><td>↓</td><td>Data transmission to the flash memory has been completed.</td><td></td></tr>
<tr><td></td><td></td><td>11</td><td>Teaching Box in Enable Mode</td><td>1</td><td>The Teaching Box is in enable mode.</td><td>306</td></tr>
<tr><td></td><td></td><td></td><td></td><td>0</td><td>The Teaching Box is not in enable mode.</td><td></td></tr>
<tr><td></td><td></td><td>12</td><td>Teaching Box in Protect Mode</td><td>1</td><td>The Teaching Box is in protect mode.</td><td>306</td></tr>
<tr><td></td><td></td><td></td><td></td><td>0</td><td>The Teaching Box is not in protect mode.</td><td></td></tr>
<tr><td></td><td></td><td>13</td><td colspan="3">Not used.</td><td>---</td></tr>
<tr><td></td><td></td><td>14</td><td>Error Flag</td><td>1</td><td>An error has occurred.</td><td>307</td></tr>
<tr><td></td><td></td><td></td><td></td><td>↓</td><td>Error Reset is ON.</td><td></td></tr>
<tr><td></td><td></td><td></td><td></td><td>0</td><td>No error has occurred.</td><td></td></tr>
<tr><td></td><td></td><td>15</td><td>Autoloading Time Up</td><td>1</td><td>Communications not possible even after waiting for the monitoring time period set in the system parameters.</td><td>308</td></tr>
<tr><td></td><td></td><td></td><td></td><td>↓</td><td>Autoloading Error Reset has been turned from OFF to ON.</td><td></td></tr>
<tr><td>n+11</td><td></td><td>00 to 15</td><td colspan="4">Error code (4-digit Hex)
<table><tr><td>$x16^3$</td><td>$x16^2$</td><td>$x16^1$</td><td>$x16^0$</td></tr></table>Normal: 0000
The above is the error code format of the MC Unit. An error code is valid while the Error Flag is ON. If an error occurs, check the error type data to find the type of error, such as a system, task 1, task 2, X-axis, or Y-axis error.</td><td>309</td></tr>
</table>

CS1W-MC221 PLC Interface Area Inputs (MC Unit to CPU Unit) n = CIO 2000 + 10 x unit number (words)

Word	Contents	Bit	Description			Page
n+12	Task 1 Status Flags	00 to 15	Task 1 M code 0000 to 03E7 (4-digit Hex) (Decimal: 0000 to 0999) 0 | $x16^2$ | $x16^1$ | $x16^0$ The M code is output, which is valid when the M strobe is turned ON.			309
n+13		00 to 15	Task 1 Executing program number 0000 to 03E7 (4-digit Hex) (Decimal: 0000 to 0999) 0 | $x16^2$ | $x16^1$ | $x16^0$ The program number of the program currently being executed or currently on standby for task 1 is output.			309
n+14		00 to 15	Task 1 Executing block number 0000 to 03E7 (4-digit Hex) (Decimal: 0000 to 0999) 0 | $x16^2$ | $x16^1$ | $x16^0$ The block number of the block currently being executed or currently on standby for task 1 is output.			310
n+15		00	Task Error Flag	1	A task error occurred.	310
				↓	Error Reset is ON.	
				0	Normal	
		01	Not used.			---
		02	Automatic Mode Flag	1	The Unit is in Automatic Mode.	310
				0	Mode other than the above.	
		03	Manual Mode Flag	1	The Unit is in Manual Mode.	311
				0	Mode other than the above.	
		04	Program Execution Flag	1	The MC program is being executed.	311
				0	Mode other than the above.	
		05	Program Execution Completed Flag	1	MC program execution has been completed. (G79 was executed.)	312
				0	Mode other than the above.	
		06	Optional Input Standby	1	Waiting for optional input.	313
				0	Mode other than the above.	
		07	M Code Reset Standby	1	Waiting for M code reset.	313
				0	Mode other than the above.	
		08	M Strobe	1	An M code (0 to 999) has been output.	314
				↓	M code reset	
		09	Cycle Start Received	1	The Cycle Start Signal was received.	315
				↓	The Cycle Start Signal is OFF.	
		10 to 12	Not used.			---
		13	Teaching Completed	1	Teaching has been completed.	316
				↓	Teaching command is OFF.	
		14	Teaching Error	1	A teaching error occurred.	316
				↓	OFF when the next teaching command has been completed normally or teaching address setting has been completed.	
		15	Teaching Address Over	1	The teaching address was too high.	317
				↓	OFF when the next teaching command has been completed normally or teaching address setting has been completed.	

CS1W-MC221 PLC Interface Area Inputs (MC Unit to CPU Unit) n = CIO 2000 + 10 x unit number (words)

Word	Contents	Bit	Description			Page
n+16	Task 2 Status Flags	00 to 15	Task 2 M code 0000 to 03E7 (4-digit Hex) (Decimal: 0000 to 0999) 0 | $x16^2$ | $x16^1$ | $x16^0$ The M code is output, which is valid when the M strobe is turned ON.			309
n+17		00 to 15	Task 2 Executing program number 0000 to 03E7 (4-digit Hex) (Decimal: 0000 to 0999) 0 | $x16^2$ | $x16^1$ | $x16^0$ The program number of the program currently being executed or currently on standby for task 2 is output.			310
n+18		00 to 15	Task 2 Executing block number 0000 to 03E7 (4-digit Hex) (Decimal: 0000 to 0999) 0 | $x16^2$ | $x16^1$ | $x16^0$ The block number of the block currently being executed or currently on standby for task 2 is output.			310
n+19		00	Task Error Flag	1	A task error occurred.	310
				↓	Error Reset is ON.	
				0	Normal	
		01	Not used.			---
		02	Automatic Mode Flag	1	The Unit is in Automatic Mode.	310
				0	Mode other than the above	
		03	Manual Mode Flag	1	The Unit is in Manual Mode.	311
				0	Mode other than the above	
		04	Program Execution Flag	1	The MC program is being executed.	311
				0	Mode other than the above	
		05	Program Execution Completed Flag	1	MC program execution has been completed. (G79 was executed.)	312
				0	Mode other than the above	
		06	Optional Input Standby	1	Waiting for optional input	313
				0	Mode other than the above	
		07	M Code Reset Standby	1	Waiting for M code reset	313
				0	Mode other than the above	
		08	M Strobe	1	An M code (0 to 999) has been output.	314
				↓	M code reset	
		09	Cycle Start Received	1	The Cycle Start Signal was received.	315
				↓	The Cycle Start Signal is OFF.	
		10 to 12	Not used.			---
		13	Teaching Completed	1	Teaching has been completed.	316
				↓	Teaching command is OFF.	
		14	Teaching Error	1	A teaching error occurred.	316
				↓	OFF when the next teaching command has been completed normally or teaching address setting has been completed.	
		15	Teaching Address Over	1	The teaching address was too high.	317
				↓	OFF when the next teaching command has been completed normally or teaching address setting has been completed.	

CS1W-MC221 PLC Interface Area Inputs (MC Unit to CPU Unit) n = CIO 2000 + 10 x unit number (words)

Word	Contents	Bit	Description			Page
n+20 n+21	X-axis Status Flags	00 to 15	X-axis present position (32-bit signed data) The present position of the reference coordinate system is output. The position of the decimal point is determined by the system parameter settings. 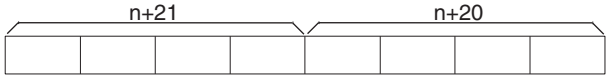 Present Position Range: FD9DA601 Hex to 026259FF Hex (–39999999 to 39999999) Example: The present position of –100 (FFFFFF9C Hex) is output as shown below. When the minimum setting unit for the X axis is 0.1 this value will be displayed as –10.0. 			318
n+22	X-axis Status Flags	00	Reference Origin	1	Within the in-position range of the reference origin.	318
				0	Outside the in-position range of the reference origin.	
		01	Busy Flag	1	A manual command is being executed.	319
				0	Other than the above	
		02	Servo-lock ON	1	Servo-lock status	320
				0	Servo-unlock status	
		03	No Origin Flag	1	No origin (Reference origin is not fixed.)	320
				0	The reference origin has been established.	
		04	Axis Operating	1	There is an axis movement command.	321
				0	There is no axis movement command.	
		05	Positioning Completed	1	Within the in-position range	322
				0	Outside the in-position range	
		06	Error Counter Warning	1	The number of accumulated pulses in the error counter exceeds the error counter warning value.	322
				0	Other than the above	
		07	Alarm Input	1	The driver alarm input is ON.	323
				0	The driver alarm input is OFF.	
		08	Zone 1 Flag	1	Within zone 1	323
				0	Outside of zone 1	
		09	Zone 2 Flag	1	Within zone 2	323
				0	Outside of zone 2	
		10	Zone 3 Flag	1	Within zone 3	323
				0	Outside of zone 3	
		11	Zone 4 Flag	1	Within zone 4	323
				0	Outside of zone 4	
		12	Zone 5 Flag	1	Within zone 5	323
				0	Outside of zone 5	
		13	Zone 6 Flag	1	Within zone 6	323
				0	Outside of zone 6	
		14	Zone 7 Flag	1	Within zone 7	323
				0	Outside of zone 7	
		15	Zone 8 Flag	1	Within zone 8	323
				0	Outside of zone 8	

CS1W-MC221 PLC Interface Area Inputs (MC Unit to CPU Unit) n = CIO 2000 + 10 x unit number (words)

Word	Contents	Bit	Description			Page
n+23 n+24	Y-axis Status Flags	00 to 15	Y-axis present position (32-bit signed data) The present position of the reference coordinate system is output. The position of the decimal point is determined by the system parameter settings. 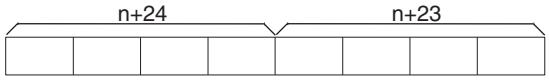 Present Position Range: FD9DA601 Hex to 026259FF Hex (−39999999 to 39999999) Example: The present position of −100 (FFFFFF9C) is output as shown below. When the minimum setting unit for the X axis is 0.1 this value will be displayed as −10.0. 			318
n+25		00	Reference Origin	1	Within the in-position range of the reference origin	318
				0	Outside the in-position range of the reference origin	
		01	Busy Flag	1	A manual command is being executed.	319
				0	Other than the above	
		02	Servo-lock ON	1	Servo-lock status	320
				0	Servo-unlock status	
		03	No Origin Flag	1	No origin (Reference origin is not fixed.)	320
				0	The reference origin has been established.	
		04	Axis Operating	1	There is an axis movement command.	321
				0	There is no axis movement command.	
		05	Positioning Completed	1	Within the in-position range	322
				0	Outside the in-position range	
		06	Error Counter Warning	1	The number of accumulated pulses in the error counter exceeds the error counter warning value.	322
				0	Other than the above	
		07	Alarm Input	1	The driver alarm input is ON.	323
				0	The driver alarm input is OFF.	
		08	Zone 1 Flag	1	Within zone 1	323
				0	Outside of zone 1	
		09	Zone 2 Flag	1	Within zone 2	323
				0	Outside of zone 2	
		10	Zone 3 Flag	1	Within zone 3	323
				0	Outside of zone 3	
		11	Zone 4 Flag	1	Within zone 4	323
				0	Outside of zone 4	
		12	Zone 5 Flag	1	Within zone 5	323
				0	Outside of zone 5	
		13	Zone 6 Flag	1	Within zone 6	323
				0	Outside of zone 6	
		14	Zone 7 Flag	1	Within zone 7	323
				0	Outside of zone 7	
		15	Zone 8 Flag	1	Within zone 8	323
				0	Outside of zone 8	
n+26 to n+29	Reserved for the system.					---

CS1W-MC421

CS1W-MC421 PLC Interface Area Outputs (CPU Unit to MC Unit) n = CIO 2000 + 10 x unit number (words)

Word	Contents	Bit	Description			Page
n	System Controls	00 (Manual/ Auto)	General Output 1/Brake Output X	1	Output port turned ON.	261
				0	Output port turned OFF.	
		01 (Manual/ Auto)	General Output 2/Brake Output Y	1	Output port turned ON.	261
				0	Output port turned OFF.	
		02 (Manual/ Auto)	General Output 3/Brake Output Z	1	Output port turned ON.	261
				0	Output port turned OFF.	
		03 (Manual/ Auto)	General Output 4/Brake Output U	1	Output port turned ON.	261
				0	Output port turned OFF.	
		04	Not used.			---
		05 (Manual/ Auto)	Autoloading Error Reset Bit	↑	Resets an autoloading error.	262
		06	Not used.			---
		07 (Manual/ Auto)	Error Counter Function Selection Bit	1	Error counter warning	263
				0	Error counter error detection	
		08 to 13	Not used.			---
		14 (Manual/ Auto)	Error Reset Bit	↑	Resets an error.	265
		15 (Manual/ Auto)	Not used.			---

CS1W-MC421 PLC Interface Area Outputs (CPU Unit to MC Unit) n = CIO 2000 + 10 x unit number (words)

Word	Contents	Bit	Description			Page
n+1	Controls Common to All Tasks	00 (Manual/ Auto)	Optional Input 0	1	Optional Input 0 turned ON.	265
				0	Optional Input 0 turned OFF.	
		01 (Manual/ Auto)	Optional Input 1	1	Optional Input 1 turned ON.	265
				0	Optional Input 2 turned OFF.	
		02 (Manual/ Auto)	Optional Input 2	1	Optional Input 2 turned ON.	265
				0	Optional Input 2 turned OFF.	
		03 (Manual/ Auto)	Optional Input 3	1	Optional Input 3 turned ON.	265
				0	Optional Input 3 turned OFF.	
		04 (Manual/ Auto)	Optional Input 4	1	Optional Input 4 turned ON.	265
				0	Optional Input 4 turned OFF.	
		05 (Manual/ Auto)	Optional Input 5	1	Optional Input 5 turned ON.	265
				0	Optional Input 5 turned OFF.	
		06 (Manual/ Auto)	Optional Input 6	1	Optional Input 6 turned ON.	265
				0	Optional Input 6 turned OFF.	
		07 (Manual/ Auto)	Optional Input 7	1	Optional Input 7 turned ON.	265
				0	Optional Input 7 turned OFF.	
		08 (Manual/ Auto)	Optional Input 8	1	Optional Input 8 turned ON.	265
				0	Optional Input 8 turned OFF.	
		09 (Manual/ Auto)	Optional Input 9	1	Optional Input 9 turned ON.	265
				0	Optional Input 9 turned OFF.	
		10 (Manual/ Auto)	Optional Input 10	1	Optional Input 10 turned ON.	265
				0	Optional Input 10 turned OFF.	
		11 (Manual/ Auto)	Optional Input 11	1	Optional Input 11 turned ON.	265
				0	Optional Input 11 turned OFF.	
		12 (Manual/ Auto)	Optional Input 12	1	Optional Input 12 turned ON.	265
				0	Optional Input 12 turned OFF.	
		13 (Manual/ Auto)	Optional Input 13	1	Optional Input 13 turned ON.	265
				0	Optional Input 13 turned OFF.	
		14 (Manual/ Auto)	Optional Input 14	1	Optional Input 14 turned ON.	265
				0	Optional Input 14 turned OFF.	
		15 (Manual/ Auto)	Optional Input 15	1	Optional Input 15 turned ON.	265
				0	Optional Input 15 turned OFF.	

CS1W-MC421 PLC Interface Area Outputs (CPU Unit to MC Unit) n = CIO 2000 + 10 x unit number (words)

Word	Contents	Bit	Description			Page
n+2	Control Bits for Task 1	00 to 15 (Manual/ Auto)	Task 1 program number 0000 to 03E7 (4-digit hexadecimal) (Decimal: 0000 to 0999) 0 | $x16^2$ | $x16^1$ | $x16^0$ Specifies the program number executed in Automatic Mode. If the Program Number Read Bit is ON, the program number will be read when the Cycle Start Bit is turned ON and the specified program will be executed from the beginning.			266
n+3		00	Not used.			---
		01 (Manual/ Auto)	Automatic/Manual Mode	↑	Any axes operating in Manual Mode will decelerate to a stop.	267
				1	Automatic Mode	
				↓	If the MC program is being executed, it will be stopped and any operating axes will decelerate to a stop.	
				0	Manual Mode	
		02 (Manual/ Auto)	Cycle Start Bit	↑	Starts MC program execution.	268
				1	Continues MC program execution.	
				0	Stops MC program execution.	
		03 (Manual/ Auto)	Single Block	1	Executes one block.	272
		04 (Manual/ Auto)	Forced Block End	↑	Forces an end to the block.	273
				1	Prohibits cycle start.	
		05 (Manual/ Auto)	Pause	↑	Pauses execution.	274
				1	Prohibits cycle start.	
		06 (Manual/ Auto)	M Code Reset Bit	↑	Resets the M code.	275
				1	M code reset standby. (Prohibits M code output.) Maintains status.	
				↓	Clears standby and starts executing the next command.	
		07 (Manual/ Auto)	Program Number Read Bit	1	Reads the program number.	277
		08 (Manual/ Auto)	Not used.			---
		09 (Manual/ Auto)	Teaching Bit	↑	Starts teaching.	277
		10 (Manual/ Auto)	Teaching Type Bit	1	Present position (feedback value)	278
				0	Target position	
		11 to 15	Not used.			---
n+4	Control Bits for Task 2	00 to 15	Task 2 program number 0000 to 03E7 (4-digit hexadecimal) (Decimal: 0000 to 0999) Refer to Control Bits for Task 1 in n+2.			266
n+5		00 to 15	Control Bits for Task 2 Refer to Control Bits for Task 1 in n+3.			266

CS1W-MC421 PLC Interface Area Outputs (CPU Unit to MC Unit) n = CIO 2000 + 10 x unit number (words)

Word	Contents	Bit	Description	Page
n+6	Control Bits for Task 3	00 to 15	Task 3 program number 0000 to 03E7 (4-digit hexadecimal) (Decimal: 0000 to 0999) Refer to Control Bits for Task 1 in n+2.	266
n+7		00 to 15	Control Bits for Task 3 Refer to Control Bits for Task 1 in n+3.	266
n+8	Control Bits for Task 4	00 to 15	Task 4 program number 0000 to 03E7 (4-digit hexadecimal) (Decimal: 0000 to 0999) Refer to Control Bits for Task 1 in n+2.	266
n+9		00 to 15	Control Bits for Task 4 Refer to Control Bits for Task 1 in n+3.	266

CS1W-MC421 PLC Interface Area Outputs (CPU Unit to MC Unit) n = CIO 2000 + 10 x unit number (words)

Word	Contents	Bit	Description			Page
n+10	X-axis Control Bits	00 to 15 (Manual/ Auto)	X-axis override 0001 to 07CF (4-digit Hex) (Decimal: 0001 to 1999) Decimal: 0001 to 1999 → 0.1% to 199.9% (0.1% increments) $x16^3$ | $x16^2$ | $x16^1$ | $x16^0$ Specifies the override value for axis operation. This override value is used while the override setting is enabled.			279
n+11		00 (Manual/ Auto)	Deceleration Stop	↑	Deceleration Stop	280
				1	Prohibits other manual commands.	
		01 (Manual/ Auto)	Origin Search	↑	Starts the origin search.	281
				1	Continues the origin search.	
				↓	Stops the origin search.	
		02 (Manual/ Auto)	Reference Origin Return	↑	Starts moving the axis to the reference origin.	282
				1	Continues movement.	
				↓	Stops movement.	
		03 (Manual/ Auto)	Jogging	↑	Starts jog operation.	283
				1	Continues jog operation.	
				↓	Stops jog operation.	
		04 (Manual/ Auto)	Error Counter Reset	↑	Starts error counter reset.	284
				1	Prohibits MC program execution.	
				↓	Continues MC program execution.	
				0	All functions can be used.	
		05 (Manual/ Auto)	Forced Origin	↑	Sets the present position as the origin.	290
		06 (Manual/ Auto)	ABS Origin Set	↑	Sets the origin for the absolute encoder.	292
		07	Not used.			---
		08 (Manual/ Auto)	Enable MPG/Sync Encoder	↑	Starts MPG/sync encoder operation.	292
				1	Continues MPG/sync encoder operation.	
				↓	Stops MPG/sync encoder operation.	
		09 (Manual/ Auto)	Servo-lock	↑	Starts servo lock.	293
		10 (Manual/ Auto)	Servo-unlock	↑	Clears the servo lock. (Enables normal reception.)	296
		11 (Manual/ Auto)	Driver Alarm Reset	1	Turns ON the driver alarm reset output.	298
				0	Turns OFF the driver alarm reset output.	
		12 (Manual/ Auto)	Override Setting	1	Enables the override setting.	299
				0	Disables the override setting.	
		13 (Manual/ Auto)	Jog direction	1	Specifies negative direction for jogging.	300
				0	Specifies positive direction for jogging.	
		14 (Manual/ Auto)	MPG Sync Encoder Ratio Specifier 1	15 14 0 0 Sets MPG/sync encoder ratio (1) 0 1 Sets MPG/sync encoder ratio (2) 1 0 Sets MPG/sync encoder ratio (3) 1 1 Sets MPG/sync encoder ratio (4)		300
		15 (Manual/ Auto)	MPG Sync Encoder Ratio Specifier 2			301

CS1W-MC421 PLC Interface Area Outputs (CPU Unit to MC Unit) n = CIO 2000 + 10 x unit number (words)

Word	Contents	Bit	Description	Page
n+12	Y-axis Control Bits	00 to 15	Y-axis override 0001 to 07CF (4-digit hex) (Decimal: 0001 to 1999) (Decimal: 0001 to 1999 → 0.1% to 199.9% (0.1% increments) Refer to X-axis Control Bits in n+10.	279
n+13		00 to 15	Y-axis Control Bits Refer to X-axis Control Bits in n+11.	280
n+14	Z-axis Control Bits	00 to 15	Z-axis override 0001 to 07CF (4-digit hex) (Decimal: 0001 to 1999) (Decimal: 0001 to 1999 → 0.1% to 199.9% (0.1% increments) Refer to X-axis Control Bits in n+10.	279
n+15		00 to 15	Z-axis Control Bits Refer to X-axis Control Bits in n+11.	280
n+16	U-axis Control Bits	00 to 15	U-axis override 0001 to 07CF (4-digit hex) (Decimal: 0001 to 1999) (Decimal: 0001 to 1999 → 0.1% to 199.9% (0.1% increments) Refer to X-axis Control Bits in n+10.	279
n+17		00 to 15	U-axis Control Bits Refer to X-axis Control Bits in n+11.	280

CS1W-MC421 PLC Interface Area Inputs (MC Unit to CPU Unit) n = CIO 2000 + 10 x unit number (words)

<table>
<tr><th>Word</th><th>Contents</th><th>Bit</th><th colspan="3">Description</th><th>Page</th></tr>
<tr><td>n+18</td><td>System Status</td><td>00 to 03</td><td colspan="3">Error Type Data
<table><tr><th colspan="4">Bits</th><th>Error</th><th>Remarks</th></tr><tr><th>03</th><th>02</th><th>01</th><th>00</th><th></th><th></th></tr><tr><td>0</td><td>0</td><td>0</td><td>0</td><td>Normal</td><td>Error Flag will be OFF.</td></tr><tr><td>0</td><td>0</td><td>0</td><td>1</td><td>System error</td><td rowspan="10">Error Flag will turn ON too.</td></tr><tr><td>0</td><td>0</td><td>1</td><td>0</td><td>Task 1 error</td></tr><tr><td>0</td><td>0</td><td>1</td><td>1</td><td>Task 2 error</td></tr><tr><td>0</td><td>1</td><td>0</td><td>0</td><td>Task 3 error</td></tr><tr><td>0</td><td>1</td><td>0</td><td>1</td><td>Task 4 error</td></tr><tr><td>0</td><td>1</td><td>1</td><td>0</td><td>X-axis error</td></tr><tr><td>0</td><td>1</td><td>1</td><td>1</td><td>Y-axis error</td></tr><tr><td>1</td><td>0</td><td>0</td><td>0</td><td>Z-axis error</td></tr><tr><td>1</td><td>0</td><td>0</td><td>1</td><td>U-axis error</td></tr></table>When an error occurs, an error output indicating the error type will be turned ON and will remain valid until the error is corrected.</td><td>301</td></tr>
<tr><td></td><td></td><td>04</td><td>Autoloading</td><td>1</td><td>Autoloading started.</td><td>302</td></tr>
<tr><td></td><td></td><td></td><td></td><td>↓</td><td>Autoloading finished.</td><td></td></tr>
<tr><td></td><td></td><td>05</td><td>Autoloading Error</td><td>1</td><td>An error occurred during autoloading.</td><td>303</td></tr>
<tr><td></td><td></td><td></td><td></td><td>↓</td><td>Autoloading Error Reset has been turned ON.</td><td></td></tr>
<tr><td></td><td></td><td>06</td><td>Data Transmission</td><td>1</td><td>Data is being transmitted.</td><td>304</td></tr>
<tr><td></td><td></td><td></td><td></td><td>↓</td><td>Data transmission has been completed.</td><td></td></tr>
<tr><td></td><td></td><td>07</td><td>Data Transmission Error</td><td>1</td><td>An error occurred during data transmission.</td><td>304</td></tr>
<tr><td></td><td></td><td></td><td></td><td>↓</td><td>Data has been resent normally.</td><td></td></tr>
<tr><td></td><td></td><td>08</td><td>Data Reception</td><td>1</td><td>Data is being received.</td><td>304</td></tr>
<tr><td></td><td></td><td></td><td></td><td>↓</td><td>Data reception has been completed.</td><td></td></tr>
<tr><td></td><td></td><td>09</td><td>Data Reception Error</td><td>1</td><td>An error occurred during data reception.</td><td>305</td></tr>
<tr><td></td><td></td><td></td><td></td><td>↓</td><td>Retransmitted data has been received normally.</td><td></td></tr>
<tr><td></td><td></td><td>10</td><td>Flash Memory Write</td><td>1</td><td>Data is being written to the flash memory.</td><td>305</td></tr>
<tr><td></td><td></td><td></td><td></td><td>↓</td><td>Data transmission to the flash memory has been completed.</td><td></td></tr>
<tr><td></td><td></td><td>11</td><td>Teaching Box in Enable Mode</td><td>1</td><td>The Teaching Box is in enable mode.</td><td>306</td></tr>
<tr><td></td><td></td><td></td><td></td><td>0</td><td>The Teaching Box is not in enable mode.</td><td></td></tr>
<tr><td></td><td></td><td>12</td><td>Teaching Box in Protect Mode</td><td>1</td><td>The Teaching Box is in protect mode.</td><td>306</td></tr>
<tr><td></td><td></td><td></td><td></td><td>0</td><td>The Teaching Box is not in protect mode.</td><td></td></tr>
<tr><td></td><td></td><td>13</td><td colspan="3">Not used.</td><td>---</td></tr>
<tr><td></td><td></td><td>14</td><td>Error</td><td>1</td><td>An error has occurred.</td><td>307</td></tr>
<tr><td></td><td></td><td></td><td></td><td>↓</td><td>Error Reset is ON.</td><td></td></tr>
<tr><td></td><td></td><td></td><td></td><td>0</td><td>No error has occurred.</td><td></td></tr>
<tr><td></td><td></td><td>15</td><td>Autoloading Time Up</td><td>1</td><td>Communications not possible even after waiting for the monitoring time period set in the system parameters.</td><td>308</td></tr>
<tr><td></td><td></td><td></td><td></td><td>↓</td><td>Autoloading Error Reset has been turned from OFF to ON.</td><td></td></tr>
</table>

CS1W-MC421 PLC Interface Area Inputs (MC Unit to CPU Unit) n = CIO 2000 + 10 x unit number (words)

Word	Contents	Bit	Description	Page
n+19	System Status	00 to 15	Error code (4-digit Hex) $x16^3$ | $x16^2$ | $x16^1$ | $x16^0$ Normal: 0000 The above is the error code format of the MC Unit. An error code is valid while the Error Flag is ON. If an error occurs, check the error type data to find the type of error, such as a system, tasks 1 to 4, X-axis to U-axis error.	309

CS1W-MC421 PLC Interface Area Inputs (MC Unit to CPU Unit) n = CIO 2000 + 10 x unit number (words)

Word	Contents	Bit	Description			Page
n+20	Task 1 Status Flags	00 to 15	Task 1 M code 0000 to 03E7 (4-digit Hex) (Decimal: 0000 to 0999) 0 | $x16^2$ | $x16^1$ | $x16^0$ The M code is output, which is valid when the M strobe is turned ON.			309
n+21		00 to 15	Task 1 Executing program number 0000 to 03E7 (4-digit Hex) (Decimal: 0000 to 0999) 0 | $x16^2$ | $x16^1$ | $x16^0$ The program number of the program currently being executed or currently on standby for task 1 is output.			310
n+22		00 to 15	Task 1 Executing block number 0000 to 03E7 (4-digit Hex) (Decimal: 0000 to 0999) 0 | $x16^2$ | $x16^1$ | $x16^0$ The block number of the block currently being executed or currently on standby for task 1 is output.			310
n+23		00	Task Error Flag	1	A task error occurred.	310
				↓	Error Reset is ON.	
				0	Normal	
		01	Not used.			---
		02	Automatic Mode Flag	1	The Unit is in Automatic Mode.	310
				0	Mode other than the above	
		03	Manual Mode Flag	1	The Unit is in Manual Mode.	311
				0	Mode other than the above	
		04	Program Execution Flag	1	The MC program is being executed.	311
				0	Mode other than the above	
		05	Program Execution Completed Flag	1	MC program execution has been completed. (G79 was executed.)	312
				0	Mode other than the above	
		06	Optional Input Standby	1	Waiting for optional input	313
				0	Mode other than the above	
		07	M Code Reset Standby	1	Waiting for M code reset	313
				0	Mode other than the above	
		08	M Strobe	1	An M code (0 to 999) is being output.	314
				↓	M code reset	
		09	Cycle Start Received	1	The Cycle Start Signal was received.	315
				↓	The Cycle Start Signal is OFF.	
		10 to 12	Not used.			---
		13	Teaching Completed	1	Teaching has been completed.	316
				↓	Teaching command is OFF.	
		14	Teaching Error	1	A teaching error occurred.	316
				↓	OFF when the next teaching command has been completed normally or teaching address setting has been completed.	
		15	Teaching Address Over	1	A teaching address was too high.	317
				↓	OFF when the next teaching command has been completed normally or teaching address setting has been completed.	

CS1W-MC421 PLC Interface Area Inputs (MC Unit to CPU Unit) n = CIO 2000 + 10 x unit number (words)

Word	Contents	Bit	Description	Page
n+24	Task 2 Status Flags	00 to 15	Task 2 M code 0000 to 03E7 (4-digit hex) (Decimal: 0000 to 0999) Refer to Task 1 M code in n+20.	309
n+25		00 to 15	Task 2 Executing program number 0000 to 03E7 (4-digit hex) Refer to Task 1 Executing program number in n+21.	310
n+26		00 to 15	Task 2 Executing block number 0000 to 03E7 (4-digit hex) Refer to Task 1 Executing block number in n+22.	310
n+27		00 to 15	Task 2 Status Flags Refer to Task 1 Status Flags in n+23.	310
n+28	Task 3 Status Flags	00 to 15	Task 3 M code 0000 to 03E7 (4-digit hex) (Decimal: 0000 to 0999) Refer to Task 1 M code in n+20.	309
n+29		00 to 15	Task 3 Executing program number 0000 to 03E7 (4-digit hex) Refer to Task 1 Executing program number in n+21.	310
n+30		00 to 15	Task 3 Executing block number 0000 to 03E7 (4-digit hex) Refer to Task 1 Executing block number in n+22.	310
n+31		00 to 15	Task 3 Status Flags Refer to Task 1 Status Flags in n+23.	310
n+32	Task 4 Status Flags	00 to 15	Task 4 M code 0000 to 03E7 (4-digit hex) (Decimal: 0000 to 0999) Refer to Task 1 M code in n+20.	309
n+33		00 to 15	Task 4 Executing program number 0000 to 03E7 (4-digit hex) Refer to Task 1 Executing program number in n+21.	310
n+34		00 to 15	Task 4 Executing block number 0000 to 03E7 (4-digit hex) Refer to Task 1 Executing block number in n+22.	310
n+35		00 to 15	Task 4 Status Flags Refer to Task 1 Status Flags in n+23.	310
n+36 n+37	X-axis Status Flags	00 to 15	X-axis present position (32-bit signed data) The present position of the reference coordinate system is output. The position of the decimal point is determined by the system parameter settings. 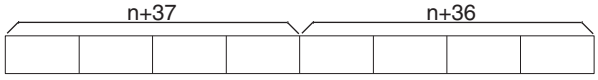 Present Position Range: FD9DA601 Hex to 026259FF Hex (39999999 to 39999999) Example: The present position of −100 (FFFFFF9C) is output as shown below. When the minimum setting unit for the X axis is 0.1, this value will be displayed as −10.0. 	318

CS1W-MC421 PLC Interface Area Inputs (MC Unit to CPU Unit) n = CIO 2000 + 10 x unit number (words)

Word	Contents	Bit	Description			Page
n+38	X-axis Status Flags	00	Reference Origin	1	Within the in-position range of the reference origin	318
				0	Outside the in-position range of the reference origin	
		01	Busy Flag	1	A manual command is being executed.	319
				0	Other than the above	
		02	Servo-lock ON	1	Servo-lock status	320
				0	Servo-unlock status	
		03	No Origin Flag	1	No origin (Reference origin is not fixed.)	320
				0	The reference origin has been established.	
		04	Axis Operating	1	There is an axis movement command.	321
				0	There is no axis movement command.	
		05	Positioning Completed	1	Within the in-position range	322
				0	Outside the in-position range	
		06	Error Counter Warning	1	The number of accumulated pulses in the error counter exceeds the error counter warning value.	322
				0	Other than the above	
		07	Alarm Input	1	The driver alarm input is ON.	323
				0	The driver alarm input is OFF.	
		08	Zone 1 Flag	1	Within zone 1	323
				0	Outside of zone 1	
		09	Zone 2 Flag	1	Within zone 2	323
				0	Outside of zone 2	
		10	Zone 3 Flag	1	Within zone 3	323
				0	Outside of zone 3	
		11	Zone 4 Flag	1	Within zone 4	323
				0	Outside of zone 4	
		12	Zone 5 Flag	1	Within zone 5	323
				0	Outside of zone 5	
		13	Zone 6 Flag	1	Within zone 6	323
				0	Outside of zone 6	
		14	Zone 7 Flag	1	Within zone 7	323
				0	Outside of zone 7	
		15	Zone 8 Flag	1	Within zone 8	323
				0	Outside of zone 8	
n+39 n+40	Y-axis Status Flags	00 to 15	Y-axis present position (32-bit signed data) The present position of the reference coordinate system is output. The position of the decimal point is determined by the system parameter settings. n+39: Rightmost 16 bits, n+40: Leftmost 16 bits Refer to X-axis present position in n+36 and n+37.			318
n+41		00 to 15	Y-axis Status Refer to X-axis Status in n+38.			318

CS1W-MC421 PLC Interface Area Inputs (MC Unit to CPU Unit) n = CIO 2000 + 10 x unit number (words)

Word	Contents	Bit	Description	Page
n+42 n+43	Z-axis Status Flags	00 to 15	Z-axis present position (32-bit signed data) The present position of the reference coordinate system is output. The position of the decimal point is determined by the system parameter settings. n+42: Rightmost 16 bits, n+43: Leftmost 16 bits Refer to X-axis present position in n+36 and n+37.	318
n+44		00 to 15	Z-axis Status Refer to X-axis Status in n+38.	318
n+45 n+46	U-axis Status Flags	00 to 15	U-axis present position (32-bit signed data) The present position of the reference coordinate system is output. The position of the decimal point is determined by the system parameter settings. n+42: Rightmost 16 bits, n+43: Leftmost 16 bits Refer to X-axis present position in n+36 and n+37.	318
n+47		00 to 15	U-axis Status Refer to X-axis Status in n+38.	318
n+48 n+49	Reserved for the system.			---

5-4 Interface Specifics

This section describes the function of individual bits and words in the PLC Interface Area. Timing charts and programming examples list the addresses for task 1 and the X axis and are given in the following form.

Bit and Word Addresses

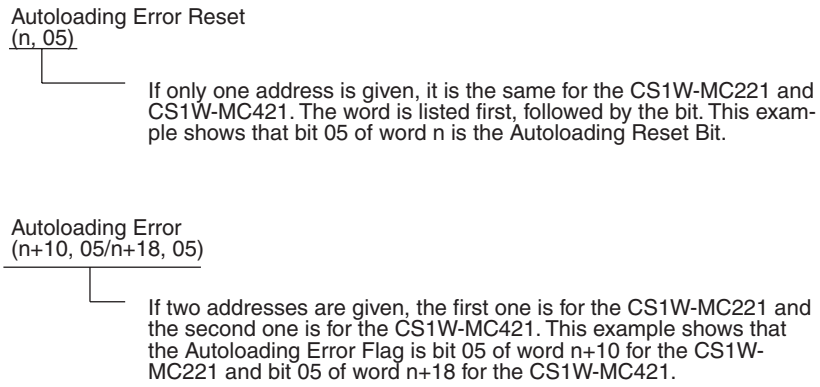

"n" is the first word allocated to the MC Unit as a PLC Interface Area and it can be calculated from the unit number set on the front of the Unit as follows:

n = CIO 2000 + 10 x unit number

Response Times

The response time, T, given in the timing charts in this section are given in the following table.

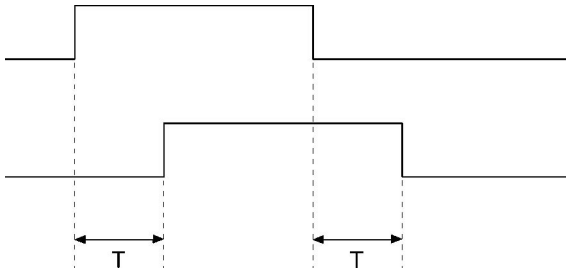

Model	Conditions	Response time (ms)
CS1W-MC221	• 1 task and 2 axes are used. • All axes are in servo-lock status (stopped). • Zones are not being used.	4.2 to 10.5
CS1W-MC421	• 1 task and 4 axes are used. • All axes are in servo-lock status (stopped). • Zones are not being used.	5.0 to 12.6

5-4-1 System Controls

General Output Bits 1 to 4/Brake Output Bits X to U

Word		Bits	I/O	Valid mode
MC221	MC421			
n		00 to 03	Output	Manual or Auto

The function of these bits depends on the settings for the output ports in the unit parameters in the system parameters. They can be set for either general outputs or brake outputs.

General Outputs

The bits can be turned ON or OFF to turn ON or OFF the corresponding output ports. Bits 00 to 03 correspond to outputs 1 to 4.

Brake Outputs

The bits can be turned ON or OFF to turn ON (release) or OFF the corresponding brake outputs on the output ports. The servo must be unlocked for the corresponding axis for these bits to be effective. If the servo is locked, changes in the bit status will be ignored. Also, if the servo is locked for an axis when the brake output is ON, changes in the bit status will be ignored as long as the servo remains locked.

The CS1W-MC221 does not have brake outputs X and U.

⚠ **Caution** If a brake output is being used for a vertical axis and the Brake Output Bit is turned ON for that axis when the servo is unlocked, the axis will descend. You must confirm safety before turning ON a Brake Output Bit.

Signal	Function
1	Turns ON output port. (Turns ON brake output.)
0	Turns OFF output port. (Turns OFF brake output.)

Timing Charts

Brake Outputs

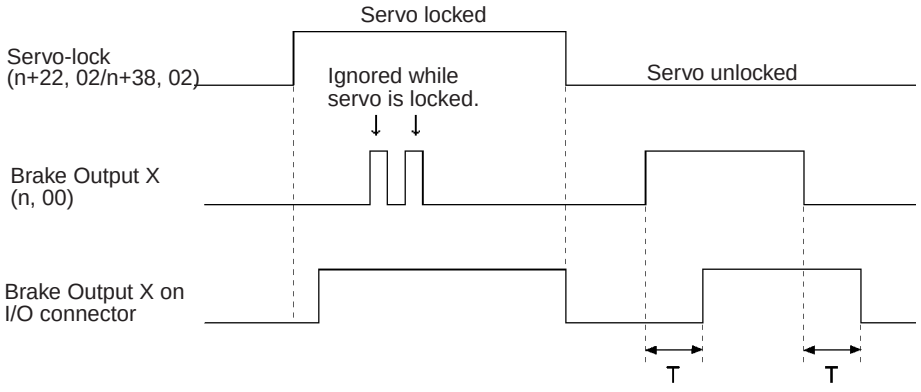

General Outputs

The servo status does not affect the operation of General Output Bits.

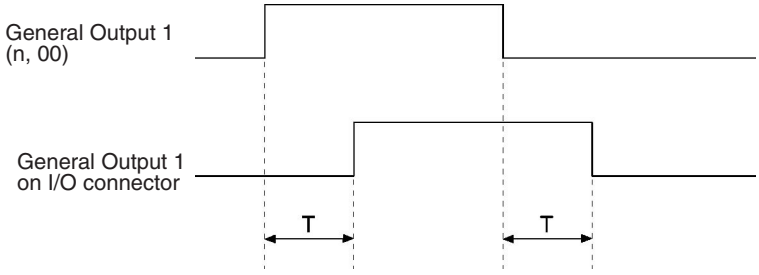

Programming Example

The following example assumes that the CS1W-MC221 has both axes set for brake outputs on the output ports.

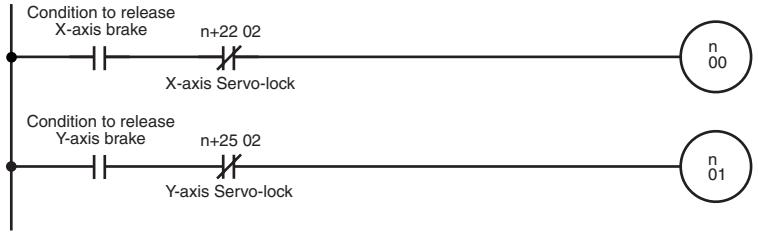

Autoloading Error Reset Bit

Word		Bit	I/O	Valid mode
MC221	MC421			
n		05	Output	Manual or Auto

This bit can be turned ON to reset errors that have occurred during autoloading. The bit should be kept ON until the Autoloading Error Flag (n+10, 05, n+18, 05) turns OFF.

Autoloading can be controlled using the IOWR instruction. Refer to *4-1 Data Transfer and Storage: Overview* and *6-16 Automatic Loading* for details.

Signal	Function
↑	Resets autoloading errors.

Timing Chart

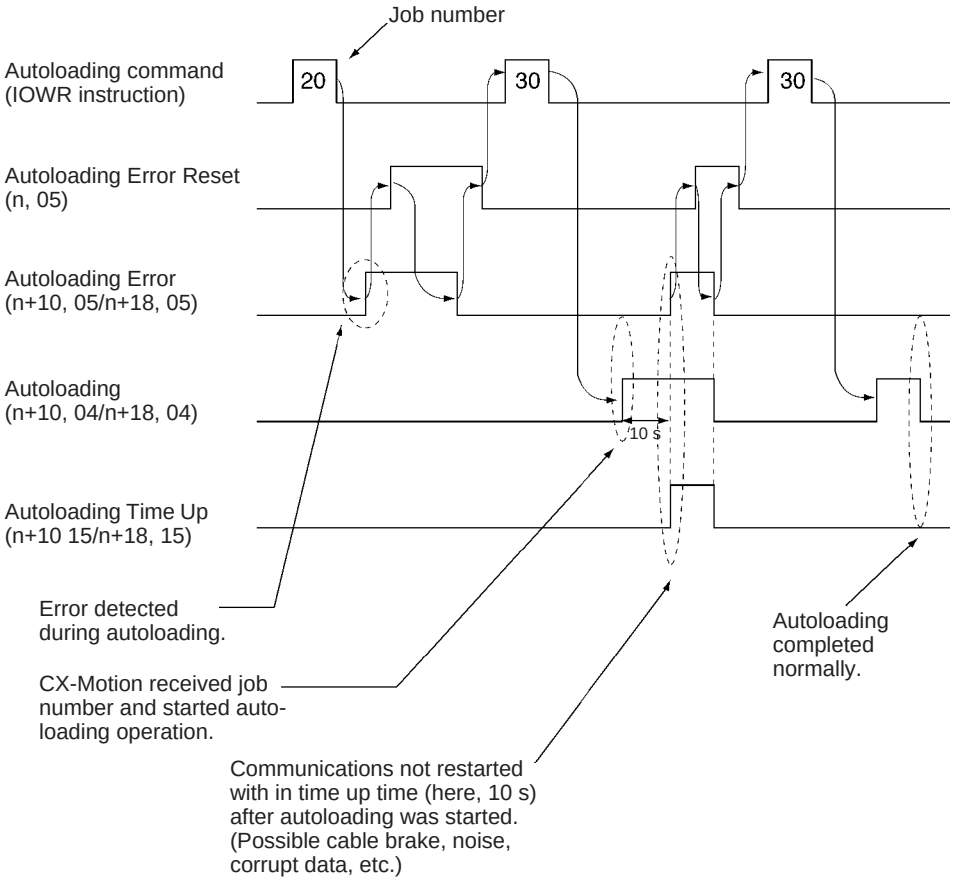

Programming Example

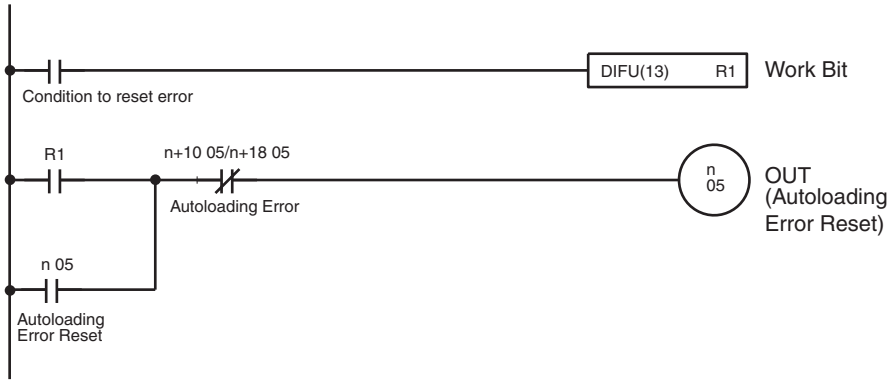

Error Counter Function Selection Bit

Word		Bit	I/O	Valid mode
MC221	MC421			
n		07	Output	Manual or Auto

This bit is used to specify the operation of the error counter. It can be used to set either error detection (default) or a warning indication.

OFF: Error Counter Error Detection

An error will be generated if the error counter warning value set in the system parameters is exceeded and the error code will be set for an error counter overflow. The axis for which the error was detected will stop as shown in the following timing charts.

Output Ports Set for Brake Outputs

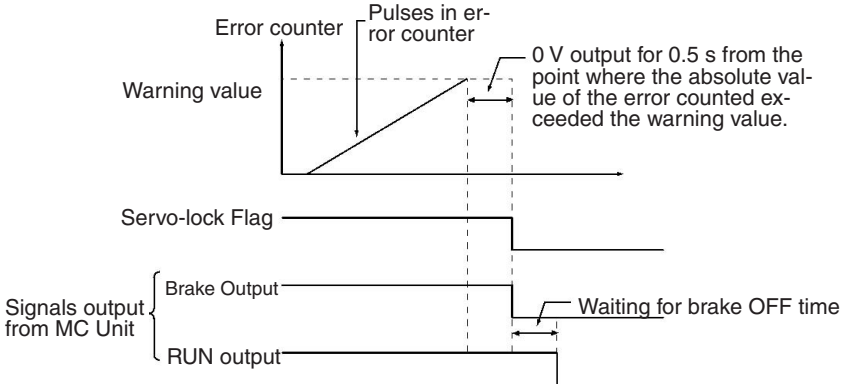

Output Ports Set for General Outputs

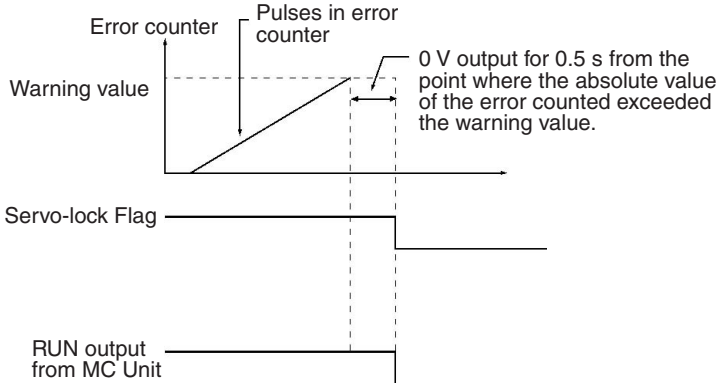

ON: Error Counter Warning

When an error counter warning is set, the error counter will be monitored, but axis operation will not be affected. A warning will be generated if the error counter warning value set in the system parameters is exceeded, and the Error Counter Warning Flag will turn ON. The Error Counter Warning Flag will turn OFF when the error counter returns to within the warning value set in the system parameters.

This warning signal will be received either in the Manual Mode or Automatic Mode.

An error counter overflow error will occur when the contents of the error counter exceeds 65,535 pulses regardless of the setting of the Error Counter Function Selection Bit.

Signal	Meaning
1	Error counter warning
0	Error counter error detection

Error Reset Bit

Word		Bit	I/O	Valid mode
MC221	MC421			
n		14	Output	Manual or Auto

Turn ON this bit to reset MC Unit errors. This bit must be kept ON until the Error Flag turns OFF.

When the Error Flag turns OFF, error type data will turn OFF as well.

Signal	Function
↑	Resets MC Unit error.

Timing Chart

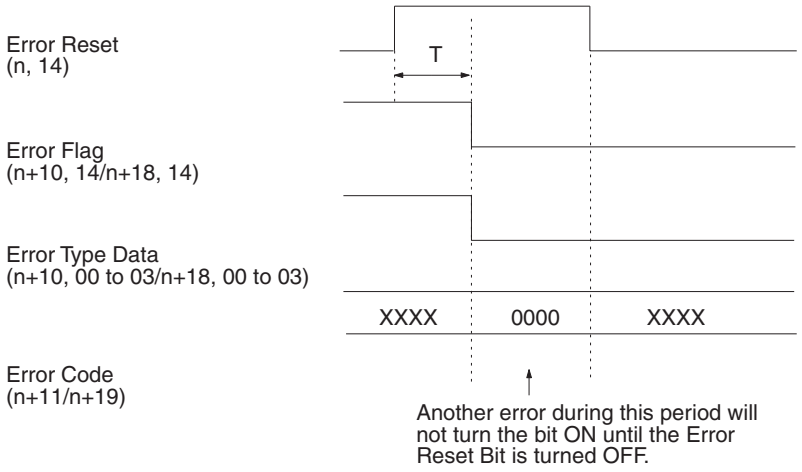

Programming Example

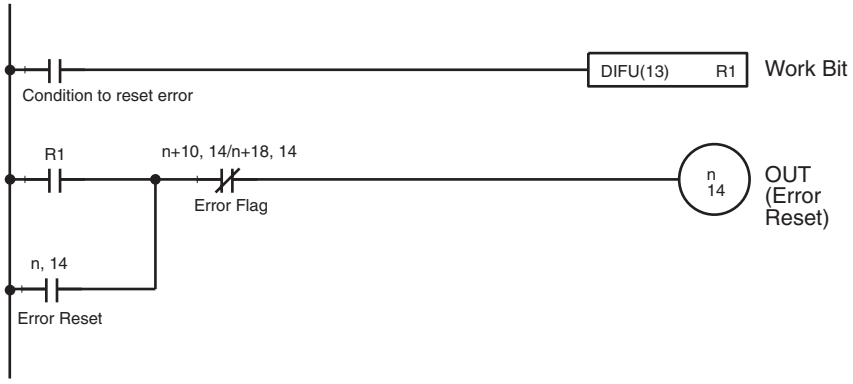

5-4-2 Controls Common to All Tasks

Optional Input Bits 0 to 15

Word		Bits	I/O	Valid mode
MC221	MC421			
n+1		00 to 15	Output	Auto

These bits can be used as conditions in MC programs when executing the OPTIONAL END (G74), OPTIONAL SKIP (G75), or OPTIONAL PROGRAM

STOP (G76) commands or using optional numbers in the G00, G01, G02, or G03 commands. There are 16 optional inputs available (bits 00 to 15).

Signal	Function
1	Turns ON the optional input.
0	Turns OFF the optional input.

Programming Example

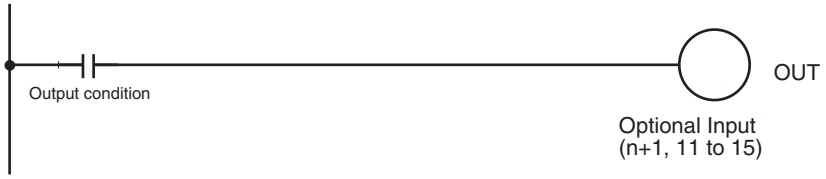

5-4-3 Task Control Bits

Note The CS1W-MC221 supports only tasks 1 and 2.

Program Numbers

Word		Task	Bits	I/O	Valid mode
MC221	MC421				
n+2		Task 1	00 to 15	Output	Auto
n+4		Task 2			
---	n+6	Task 3			
---	n+8	Task 4			

These words are used to specify the program number that is to be executed in each task. The program number is specified in 4-digit hexadecimal as shown below.

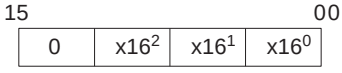

The number must be between 0000 and 03E7 hex (0000 to 0999 decimal).

When the Program Number Read Bit is ON, the program numbers in these words will be read when the Cycle Start Bit is turned ON and the program will be executed from the beginning.

Timing Chart

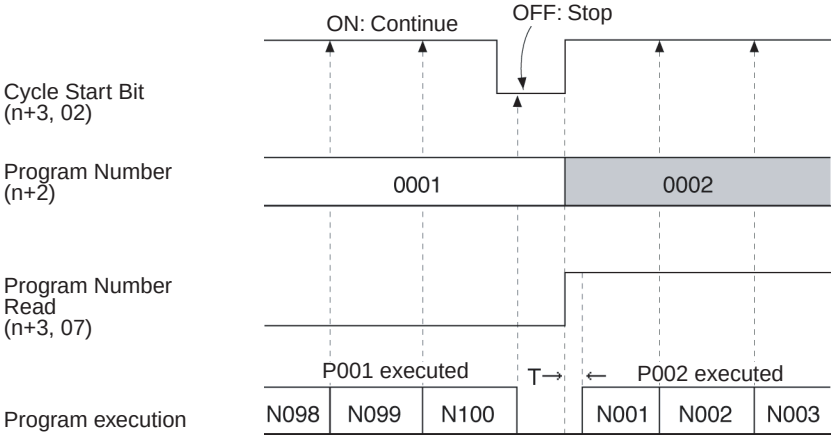

Programming Example Refer to the description of the *Cycle Start Bits* on page 268.

Automatic/Manual Mode Bits

Word		Task	Bit	I/O	Valid mode
MC221	MC421				
n+3		Task 1	01	Output	Manual or Auto
n+5		Task 2			
---	n+7	Task 3			
---	n+9	Task 4			

These bits are used to specify the mode for each task. Turn ON a bit to specify Automatic Mode; turn OFF a bit to specify Manual Mode. In Manual Mode, manual origin searches, manual origin returns, and jogging are possible. In Automatic Mode, the MC programs can be executed.

When the mode is switched from manual to automatic, any operating axes will decelerate to a stop. When the mode is switched from automatic to manual, the program will be stopped if it is being executed. The program will be restarted from the block where it was stopped if the mode is switched back to automatic.

Signal	Function
↑	Any axes operating in Manual Mode will be decelerated to a stop.
1	Automatic Mode
↓	Any MC programs being executed will be stopped and any operating axes will be decelerated to a stop.
0	Manual Mode

Timing Chart

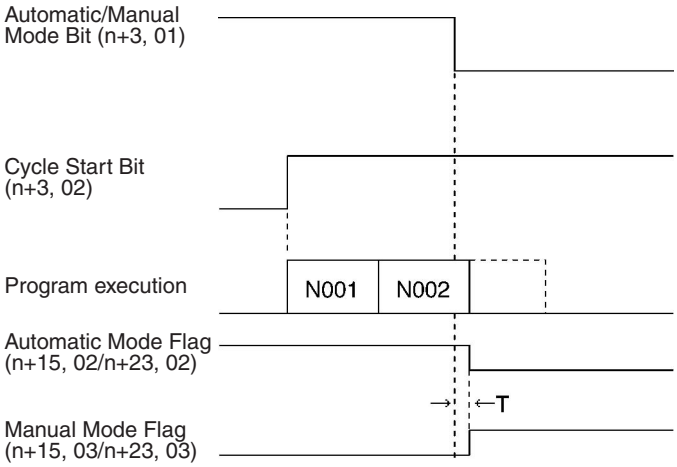

Programming Example

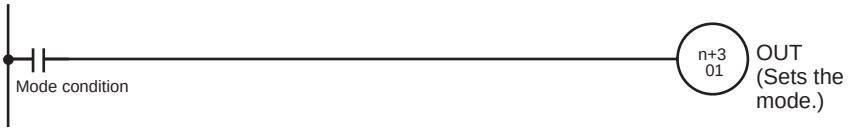

Cycle Start Bits

Word		Task	Bit	I/O	Valid mode
MC221	MC421				
n+3		Task 1	02	Output	Auto
n+5		Task 2			
---	n+7	Task 3			
---	n+9	Task 4			

These bits control MC program execution if the mode is set to Automatic Mode. Turn a bit ON to start the program from the beginning or restart a program that has been interrupted from the block where it stopped.

If an error has been reset, the program will continue when the Cycle Start Bit is turned ON.

The Cycle Start Bit is read at the start of each block and execution continues if it is ON. If the Cycle Start Bit is OFF, the program will be stopped. In Pass operation, the next block will be executed even if the Cycle Start Bit is OFF but the program will be stopped after the next block has been completed.

With In-position Check OFF Mode, as with Pass operation, the next block will be executed even if the Cycle Start Bit is OFF but the program will be stopped after the next block has been completed.

Signal	Function
↑	Starts MC program execution.
1	Continues execution. (Read at the start of each block.)
0	Stops execution. (Read at the start of each block.)

Timing Chart

Normal Operation:

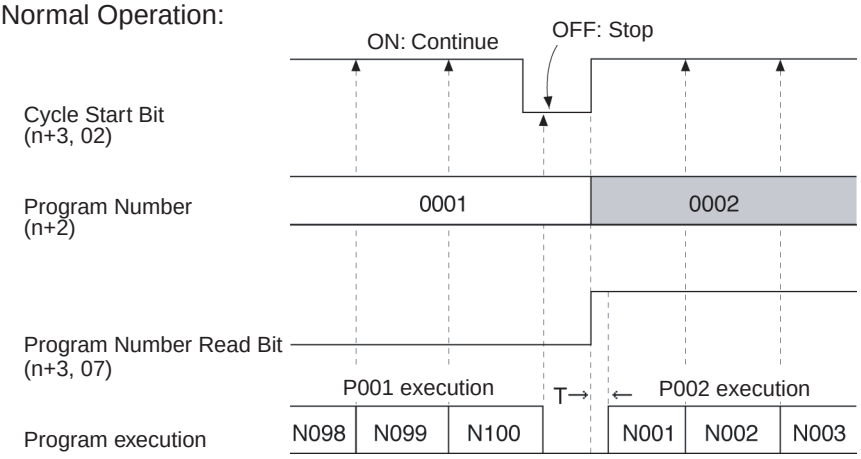

Pass Operation:

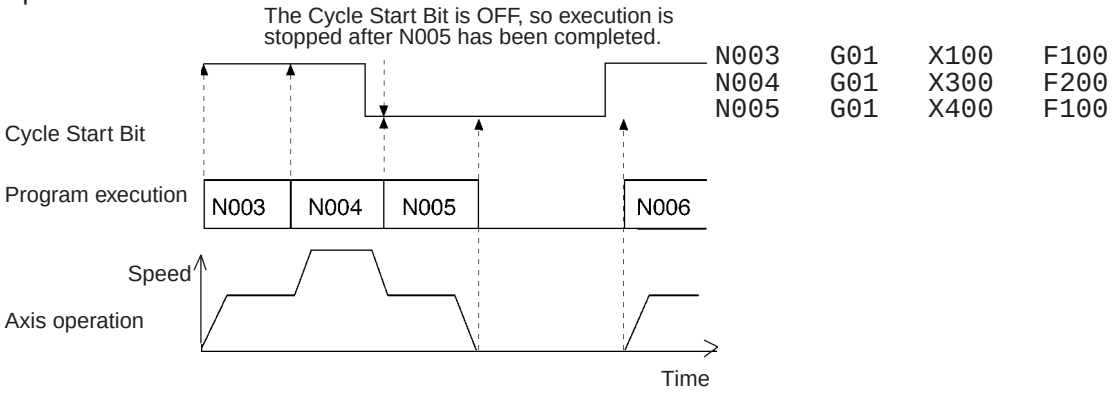

Programming Example The following example is for task 1 using the X and Y axes.

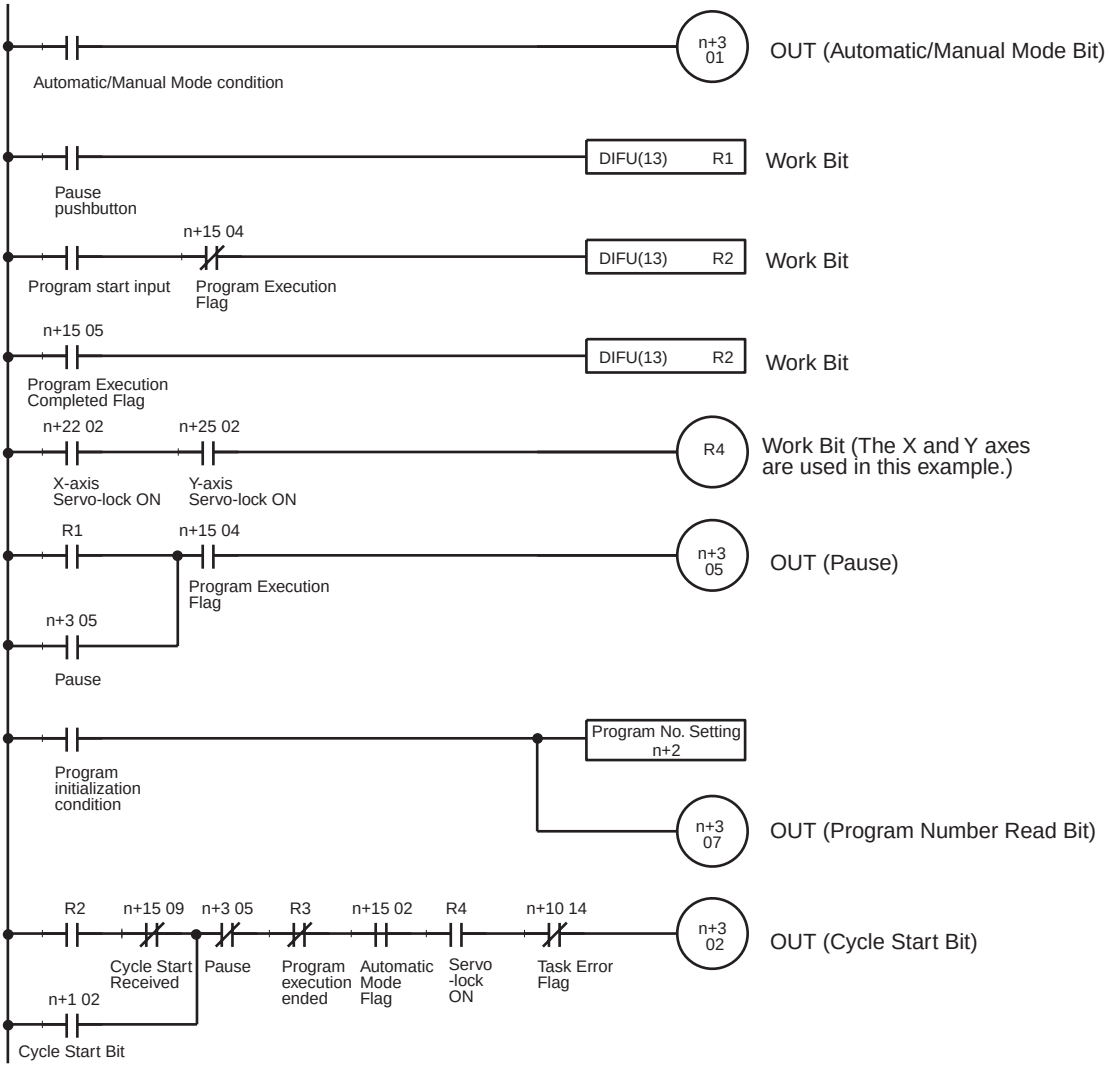

Note When executing positioning command in a MC program, all of the axes being used must be servo-locked (Servo Lock ON Flags ON), so be sure to add a condition like R4 in the program example above.

Timing Chart

The following timing charts illustrates the operation of the above programming example.

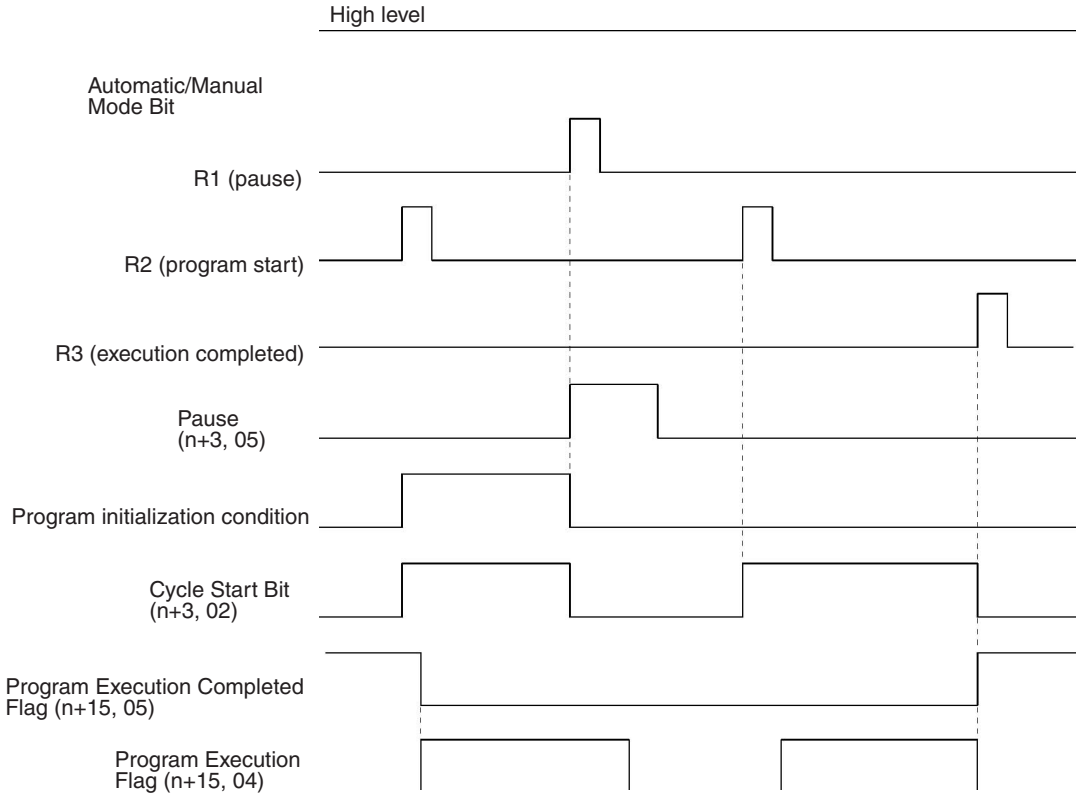

Note 1. Programs can be continued even after the following operations. Before continuing the program operation, be sure to confirm that existing conditions will not cause any problem. If continuous program operation causes a problem, do not continue the program; instead create the ladder program so that the program will be executed from the beginning.

a) Program operation running under the Automatic Mode was stopped intentionally or came to a stop by itself.
Examples: The Cycle Start Bit was turned OFF.
An error occurred.

b) Manual commands were executed in Manual Mode.
Examples: An origin search was executed.
Jogging was executed.
A servo lock was executed.

c) The Cycle Start Bit was turned ON to continue operation after returning to Automatic Mode.

For example, the following type of operation is possible:
The program can be temporarily suspended while moving to X10000 and stopped at a position before the demand position, e.g., X500. The mode can then be changed to Manual Mode and an origin search executed. After the origin search has been completed, the mode can be changed back to Automatic Mode to continue program operation. The program will continue the move operation to X10000.

Single Block Bits

Word		Task	Bit	I/O	Valid mode
MC221	MC421				
n+3		Task 1	03	Output	Auto
n+5		Task 2			
---	n+7	Task 3			
---	n+9	Task 4			

These bits are used to execute programs one block at a time. The Single Block Bits and Cycle Start Bits are used together.

- A single block can be executed by turning ON a Single Block Bit and then turning the Cycle Start BIt ON and then OFF.
- When a program is being executed (i.e., the Cycle Start Bit is ON), the corresponding Single Block Bit is checked at the start of each block; if it is ON, the next block will be executed and program execution will be paused.

To switch from single block execution to normal program execution, turn OFF the Single Block Bit and then turn ON the Cycle Start Bit. The program will be executed continuously starting from the next block. (The Program Number Read Bit must be OFF.)

When the Single Block Bit is turned ON during Pass operation, the next block will be completed before program execution is paused.

If the Single Block Bit is ON when decelerating with the OPTIONAL STOP command, program execution will be paused after decelerating to a stop.

Signal	Function
1	The status of a Single Block BIt is checked when the Cycle Start Bit is turned ON and at the beginning of each block. When the bit is ON, program execution is paused after the next block is executed.

Timing Chart

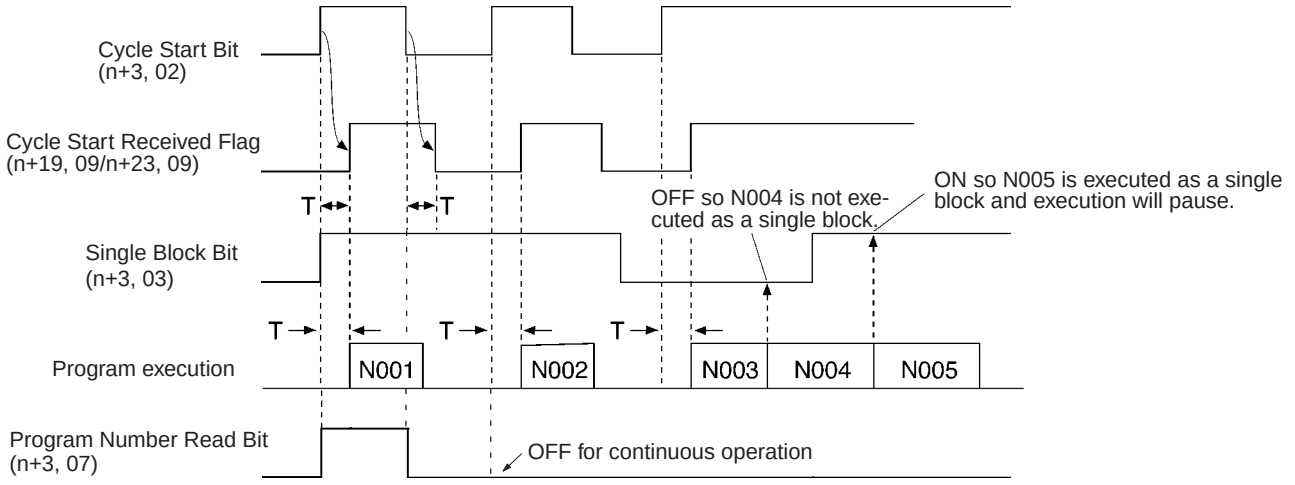

Programming Example

Note Refer to the programming example for the *Cycle Start Bits* on page 268.

Forced Block End Bits

Word		Task	Bit	I/O	Valid mode
MC221	MC421				
n+3		Task 1	04	Output	Auto
n+5		Task 2			
---	n+7	Task 3			
---	n+9	Task 4			

These bits are used to end execution of the current block. When a block is ended, the remainder of the block will not be executed. Program execution will start from the next block when restarted with the Cycle Start Bit. (The Program Number Read Bit must be OFF to continue executing the same program.)

Any axes that are operating will be decelerated to a stop. If the block being executed is waiting for an M code reset, the M code will be cleared to 0, the M strobe will be turned OFF, and then program execution will be stopped.

Operation of a Cycle Start Bit is disabled as long as the Forced Block End Bit is ON. (The program won't be executed when the Cycle Start Bit is turned ON if the Forced Block End Bit is ON.)

The Forced Block End Bits have higher priority than Pause Bit (n+1 bit 05). If both of these bits go ON at the same time, the block end will be ended.

Keep a Forced Block End Bit ON until the Program Execution Flag turns OFF.

Signal	Function
↑	Ends the block being executed.
1	As long as the bit remains ON, the program won't be executed even if the Cycle Start Bit turns ON.

Timing Chart

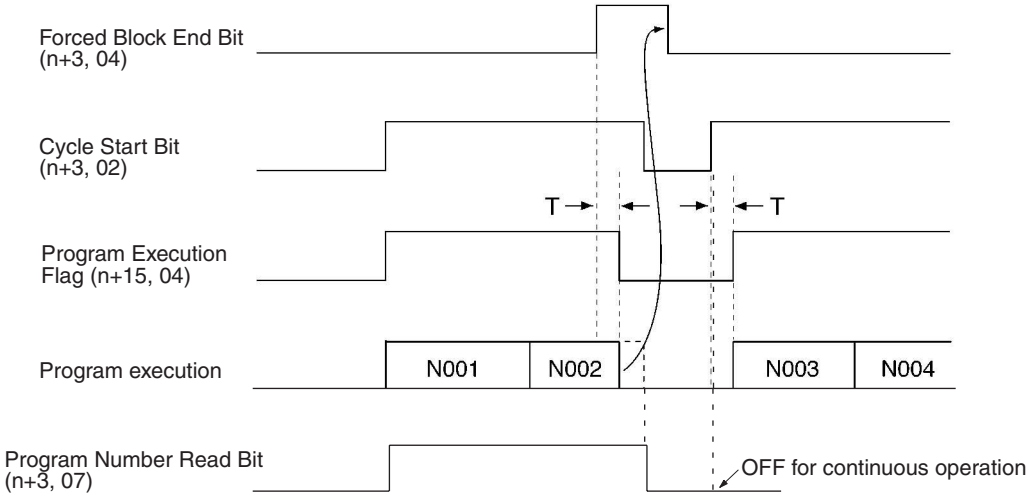

Programming Example

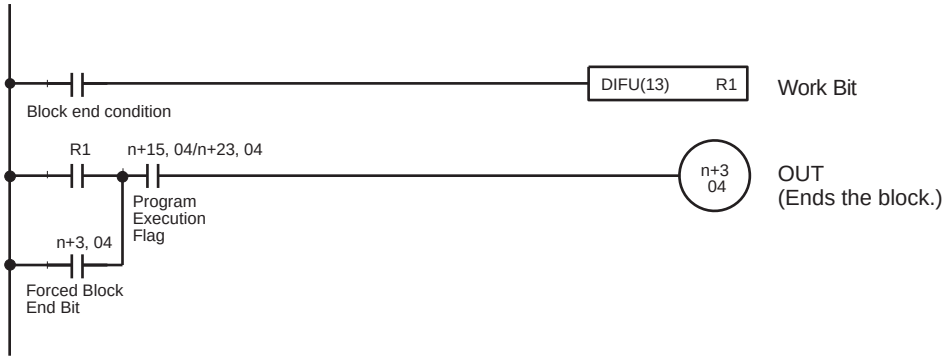

Pause Bits

Word		Task	Bit	I/O	Valid mode
MC221	MC421				
n+3		Task 1	05	Output	Auto
n+5		Task 2			
---	n+7	Task 3			
---	n+9	Task 4			

These bits are used to temporarily pause program execution.

When a bit is turned ON, the block being executed will be interrupted and any axes that are operating will be decelerated to a stop.

Operation is restarted by turning ON the Cycle Start Bit. The program that was paused will be executed as long as the Program Number Read Bit is OFF.

Operation of the Cycle Start Bit is disabled as long as the Pause Bit is ON. (The program won't be executed when the Cycle Start Bit is turned ON if the Pause Bit is ON.)

The Pause Bits have a lower priority than the Forced Block End Bits. If both of these bits go ON at the same time, the block will be ended.

Keep the Pause Bit ON until the Program Execution Flag turns OFF.

Signal	Function
↑	Pauses execution of the block being executed.
1	As long as the bit remains ON, the program won't be executed when the Cycle Start Bit turns ON.

Timing Chart

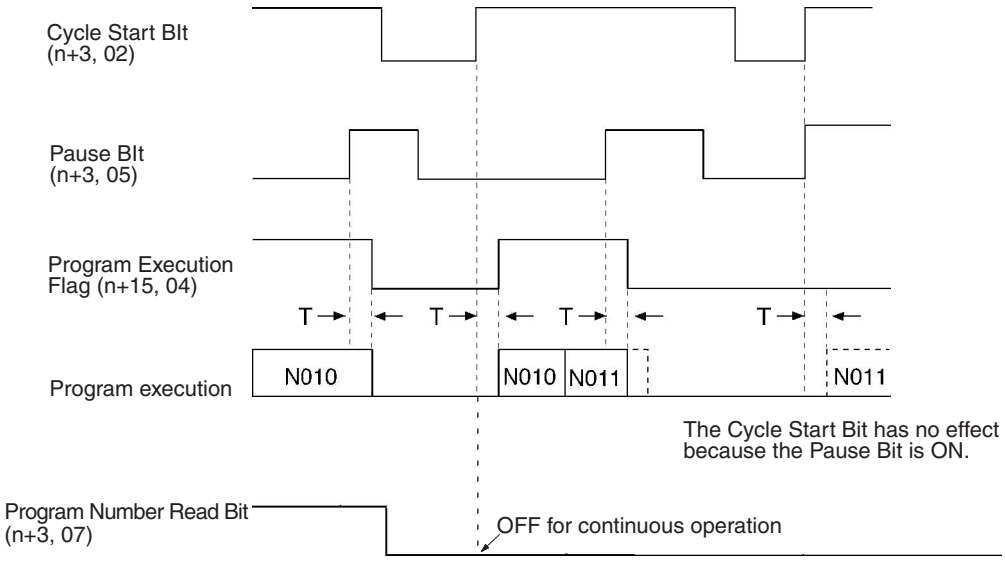

Programming Example

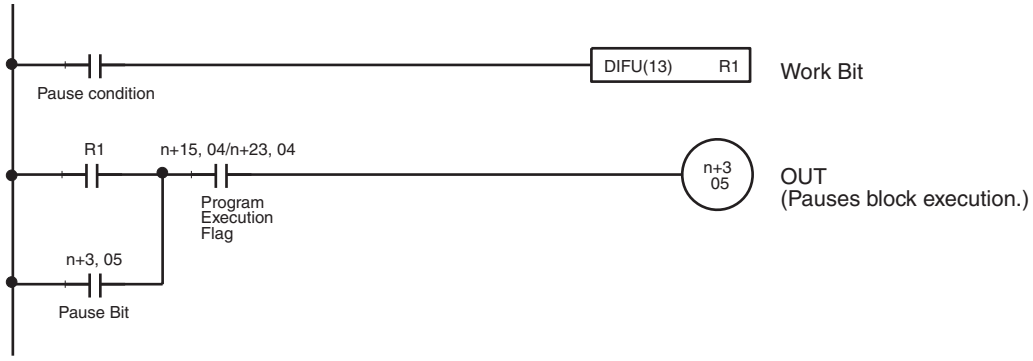

M Code Reset Bits

Word		Task	Bit	I/O	Valid mode
MC221	MC421				
n+3		Task 1	06	Output	Manual or Auto
n+5		Task 2			
---	n+7	Task 3			
---	n+9	Task 4			

These bits reset the M code output for each task.

If M code 0 to 499 is output in the program, that block will wait for an M code reset and other commands will not be executed. The M Code Reset Bit can be turned ON to clear the M code to 0 and turn OFF the M Strobe Flag.

Program execution will restart when the M Code Reset Bit is turned OFF.

Keep the M Code Reset Bit ON until the M Strobe Flag turns OFF.

If the M Code Reset BIt is already ON when a block is executed, that block's M code won't be output.

When M codes 500 to 999 are being output and this bit is turned ON, the M code will be reset in either Automatic or Manual Mode.

Signal	Function
↑	If an M code is on standby (M000 to M499), the M code will be reset. M codes M500 to M999 will be reset.
1	M code output prohibited. Program execution will continue if there is no M code waiting to be reset.
↓	Clears the M code and starts execution of the next command.

Timing Chart 1

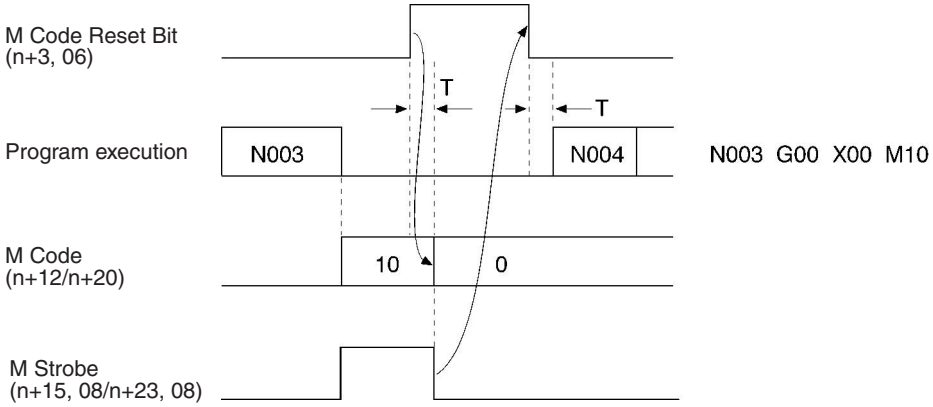

Programming Example 1

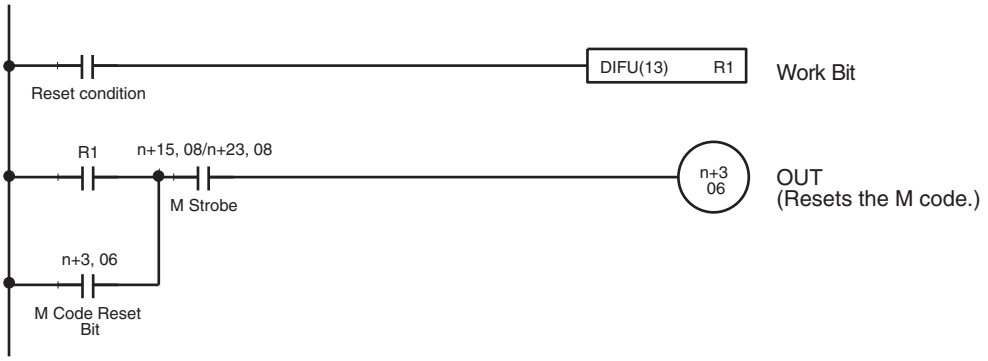

Timing Chart 2

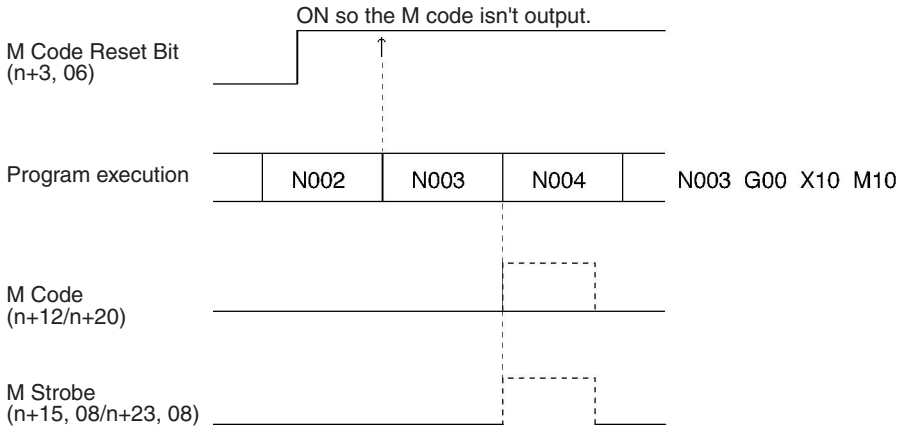

Programming Example 2

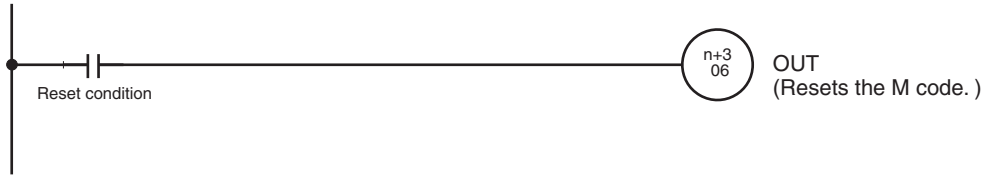

Program Number Read Bits

Word		Task	Bit	I/O	Valid mode
MC221	MC421				
n+3		Task 1	07	Output	Auto
n+5		Task 2			
---	n+7	Task 3			
---	n+9	Task 4			

These bits specify reading the number of the MC program that will be executed in each task. Status is read when the Cycle Start Bit turns ON. If a bit is ON when the Cycle Start Bit turns ON, the Program Number set in the PLC Interface Area will be read and the specified program will be executed from the beginning.

When any MC programs in the same task have been edited, added, or deleted, always turn ON the Program Number Read Bit the next time that the Cycle Start Bit is turned ON. An error will occur if the Program Number Read Bit is OFF.

Signal	Function
1	Indicates reading the Program Number.

Note Refer to the *Cycle Start Bits* on page 268.

Teaching Bits

Word		Task	Bit	I/O	Valid mode
MC221	MC421				
n+3		Task 1	09	Output	Manual or Auto
n+5		Task 2			
---	n+7	Task 3			
---	n+9	Task 4			

These bits are used to read the reference coordinate system position into the position data address according to the Teaching Type Bit specification: Target Position or Present Position (Feedback Value).

When a bit is turned ON, the present position is read as the position data and then the teaching addresses stored in memory for the axes in the task are incremented.

The bit must be kept ON until the Teaching Completed Flag turns ON.

Teaching can be performed in Automatic or Manual Mode, even if a task error has occurred.

Signal	Function
↑	Present positions are read to memory.

Note Refer to the *Teaching Type Bits* on page 278.

Teaching Type Bits

Word		Task	Bit	I/O	Valid mode
MC221	MC421				
n+3		Task 1	10	Output	Manual or Auto
n+5		Task 2			
---	n+7	Task 3			
---	n+9	Task 4			

These bits are set to specify which position is used for teaching. There are two positions that can be specified: Target Position and the Present Position.

- Target Position:
  The present position of the command
- Present Position (Feedback Value):
  The actual present position produced from the encoder

Determine which position is appropriate for your application. The status of this bit is read when the Teaching Bit is turned ON.

Maintain the status of the Teaching Type Bit until the Teaching Completed Flag turns ON.

Signal	Function
1	Specifies the present position (feedback value).
0	Specifies the target position.

Timing Chart

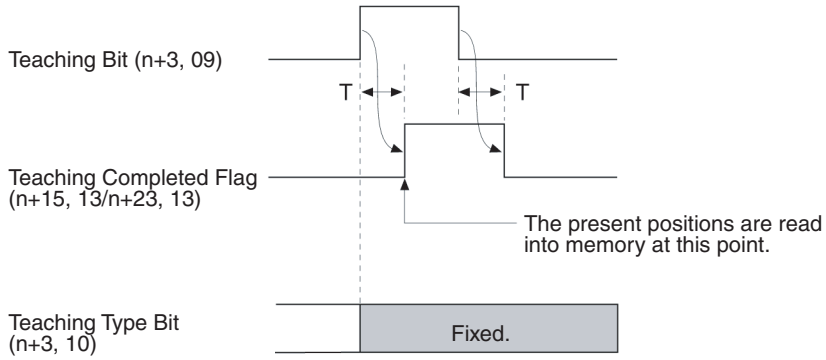

Programming Example

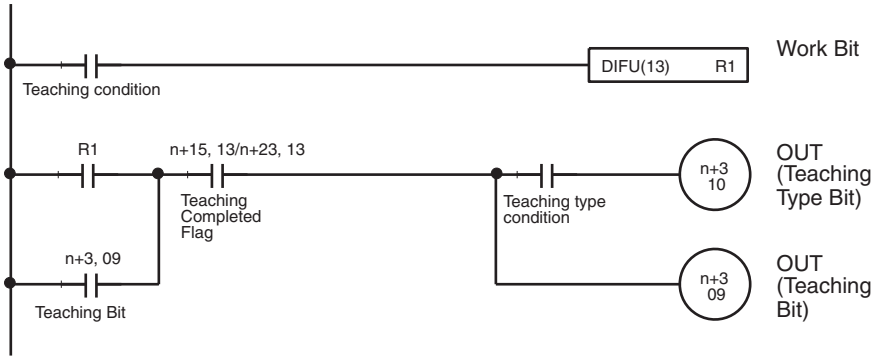

Target vs. Present Position

In this example, the X-axis is moved to X100, so the X target position (the command's present position) is 100. Actually, a servo is used and a varying deviation from 100 occurs. The actual present position from the encoder reflects this deviation.

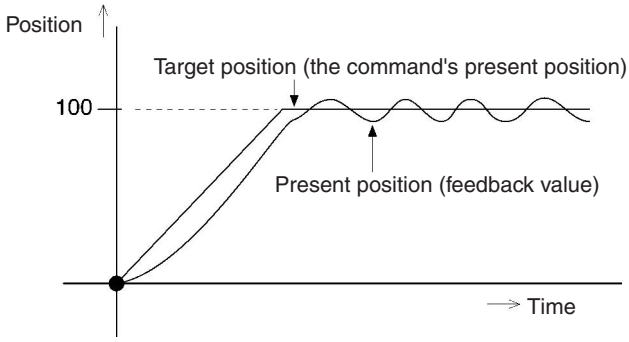

5-4-4 Axis Control Bits

X- to U-axis Overrides

With the CS1W-MC221, the overrides apply to only the X axis and Y axis.

Word		Axis	Bits	I/O	Valid mode
MC221	MC421				
n+6	n+10	X axis	00 to 15	Output	Manual or Auto
n+8	n+12	Y axis			
---	n+14	Z axis			
---	n+16	U axis			

The overrides specified in these words are applied whenever the overrides are enabled with the Override Setting Bit. The overrides are specified as 4-digit hexadecimal values in the following form.

15			0
0	$x16^2$	$x16^1$	$x16^0$

The setting must be between 0001 and 07CF hex (0001 to 1999 decimal) corresponding to 0.1% to 199.9%.

Refer to the *Override Setting Bits* on page 299 for the types of axis feed operations for which the overrides are effective.

Timing Chart

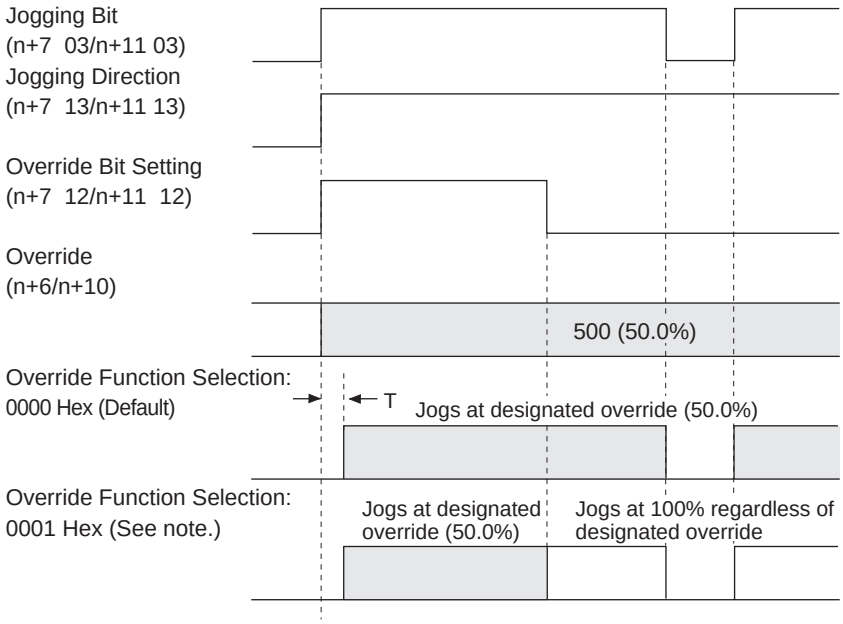

Note: Can be used with Unit Ver. 1.15 or later, and with Units whose model number ends in -V1. Unit Ver. 1.14 or earlier will use default operation.

Programming Example Refer to the *Override Setting Bits* on page 299.

Deceleration Stop Bits

Word		Axis	Bit	I/O	Valid mode
MC221	MC421				
n+7	n+11	X axis	00	Output	Manual
n+9	n+13	Y axis			
---	n+15	Z axis			
---	n+17	U axis			

These bits can be turned ON to stop operation when one of the following manual commands is being executed: Origin Search, Origin Return, Jogging, or MPG Operation. The Deceleration Stop Bits are effective even if the Busy Flag is ON.

Keep the bit ON until the Axis Operating turns OFF.

Even after decelerating to a stop, the next manual command won't be executed until the bit is turned OFF.

The Deceleration Stop Bit doesn't have any effect if it is turned ON while the axis is stopped, but other manual commands can't be received as long as the bit is ON. This disabling function can be used when interlocking and is also valid for manual commands that don't involve axis operations.

Signal	Function
↑	Starts decelerating manual operations to a stop.
1	Prevents reception of other manual commands.

Timing Chart

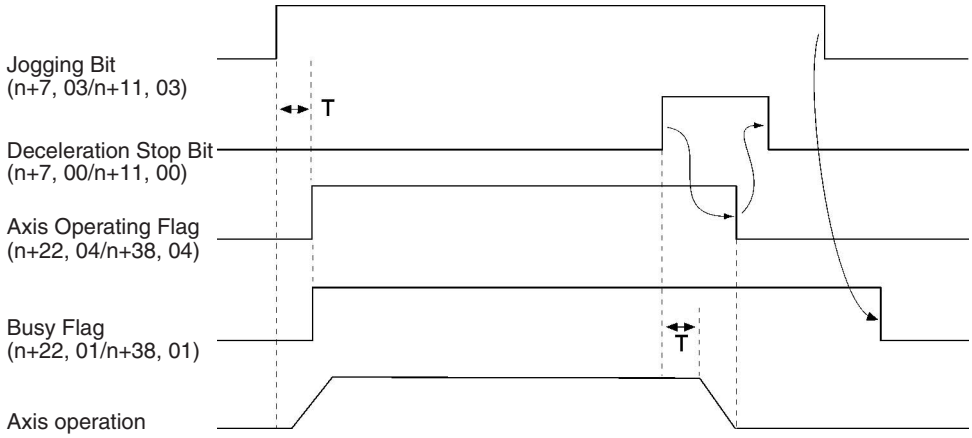

Programming Example

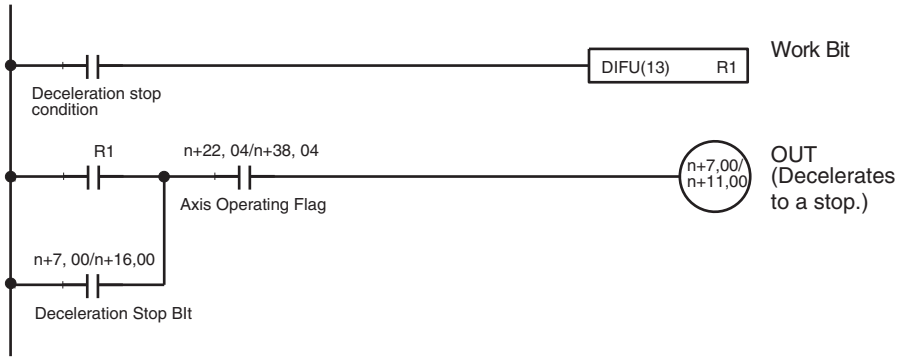

Origin Search Bits

Word		Axis	Bit	I/O	Valid mode
MC221	MC421				
n+7	n+11	X axis	01	Output	Manual
n+9	n+13	Y axis			
---	n+15	Z axis			
---	n+17	U axis			

These bits are turned ON to perform a manual origin search. Overrides are ignored in manual origin searches.

If a reference origin offset is specified in the system parameters, the axis will be moved that distance from the mechanical origin by PTP control after the mechanical origin is detected. At this point, the high-speed feed rate, acceleration time, and deceleration time will be used and overrides will be valid. The position after the movement will be the origin of the reference coordinate system.

Origin Search Bits are ignored when the Busy Flag is ON. The origin search operation will be stopped if the Origin Search Bit is turned OFF while the search is in progress. Keep the bit ON until the No Origin Flag turns OFF.

When the Origin Search Method machine parameter has been set to set the origin at power ON, that position will be the origin for manual origin searches.

Signal	Function
↑	Starts the origin search.
↓	Stops the origin search if it is in progress.

Timing Chart

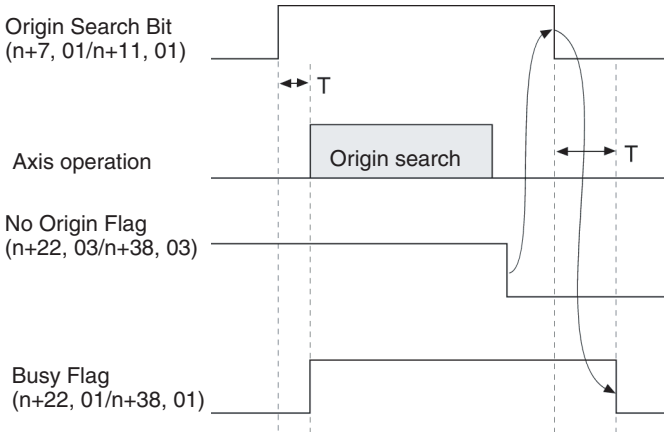

Programming Example

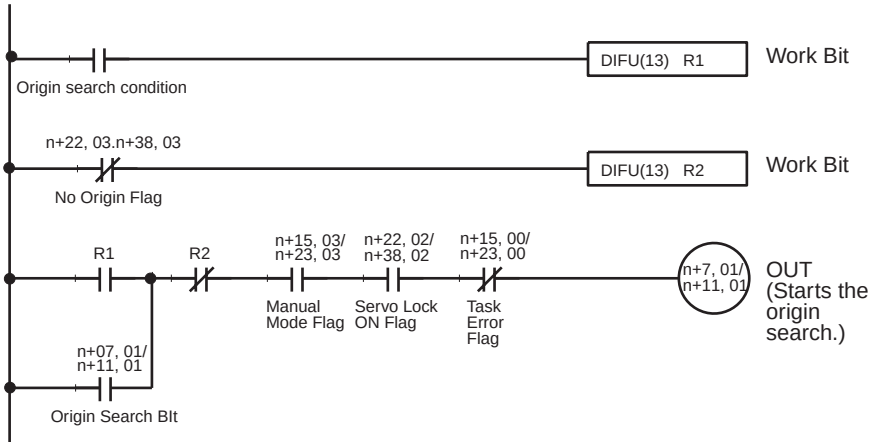

Reference Origin Return Bits

Word		Axis	Bit	I/O	Valid mode
MC221	MC421				
n+7	n+11	X axis	02	Output	Manual
n+9	n+13	Y axis			
---	n+15	Z axis			
---	n+17	U axis			

These bits can be turned ON to move to the origin of the reference coordinate system using PTP control. The high-speed feed rate, acceleration time, and deceleration time are used during the operation.

The override (0.1% to 100.0%) are effective for the manual origin return. An error will occur if a Reference Origin Return Bit is turned ON but the mechanical origin hasn't been established. For axes set to the Unlimited Feed Mode, however, the reference origin will be returned to even if the origin has not been established.

The bit is ignored if the Busy Flag is ON.

Keep the bit ON until the Reference Origin Flag turns ON.

Signal	Function
↑	Starts the origin return.
↓	Stops the origin return if it is in progress.

Timing Chart

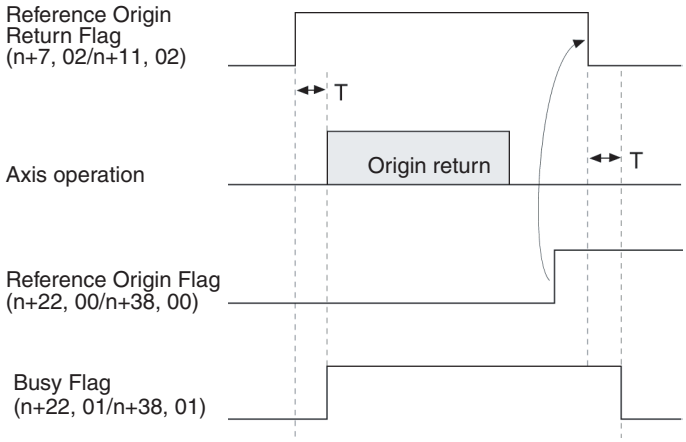

Programming Example

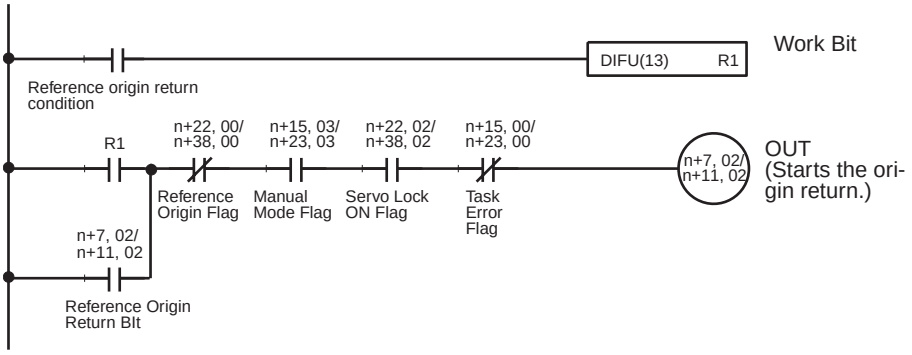

Jogging Bits

Word		Axis	Bit	I/O	Valid mode
MC221	MC421				
n+7	n+11	X axis	03	Output	Manual
n+9	n+13	Y axis			
---	n+15	Z axis			
---	n+17	U axis			

These bits are used to jog the axes. The axis is moved in the specified jog direction when a bit is turned ON and decelerates to a stop when a bit is turned OFF.

Jogging is performed with PTP control using the high-speed feed rate, acceleration time, and deceleration time. Override (0.1% to 100.0%) are effective for jogging. Operation depends on whether the mechanical origin has been established or not.

- Mechanical Origin Established
  a) Jogging can be performed within the software limits.
  b) At the software limits, the axis will stop after using up the accumulated pulses in the error counter.
- Mechanical Origin Not Established (or Set to Unlimited Axis Mode)
  Jogging can be performed without limit.

A Jogging Bit is ignored if the Busy Flag is ON.

Signal	Function
↑	Starts jogging.
↓	Stops jogging.

Timing Chart

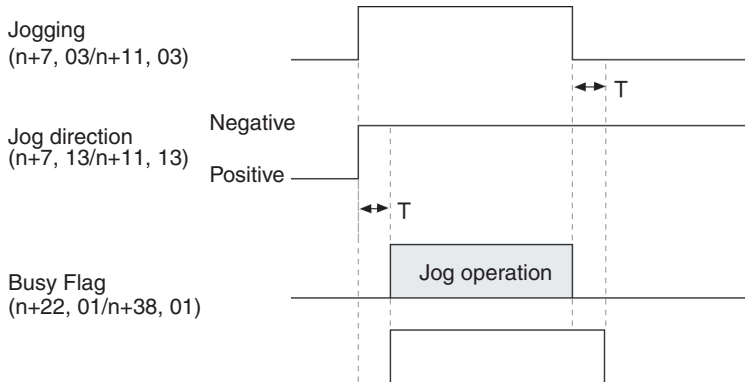

Programming Example

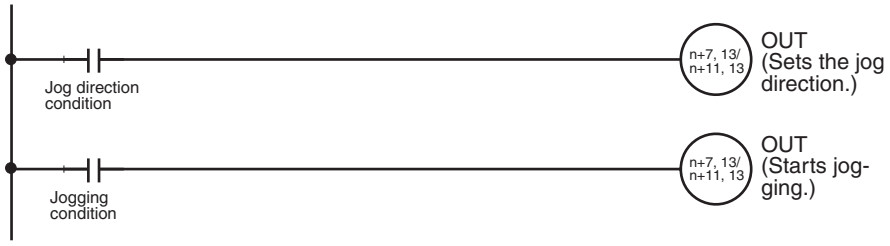

Error Counter Reset Bits

Word		Axis	Bit	I/O	Valid mode
MC221	MC421				
n+7	n+11	X axis	04	Output	Manual or Auto
n+9	n+13	Y axis			
---	n+15	Z axis			
---	n+17	U axis			

These bits can be turned ON to reset the error counters to 0. An error counter will be reset only once each time the bit turns ON. The error counter will be reset at the following times.

- If the axis is stopped (i.e., the Axis Operating Flag is OFF), the error counter will be reset immediately.
- If the axis is not stopped (i.e., the Axis Operating Flag is ON), the error counter will be reset when the axis does stop provided that the Error Counter Reset Bit is still ON.

The present positions will be updated even when the error counter is reset to 0.

The Busy Flag will turn ON when the Error Counter Reset Bit is turned ON and will turn OFF when the Error Counter Reset Bit is turned OFF.

Signal	Function
↑	Resets the error counter.
0	Functions enabled.

Resetting an Error Counter in Manual Mode

The following timing chart illustrates operation when the error counter is reset while jogging manually.

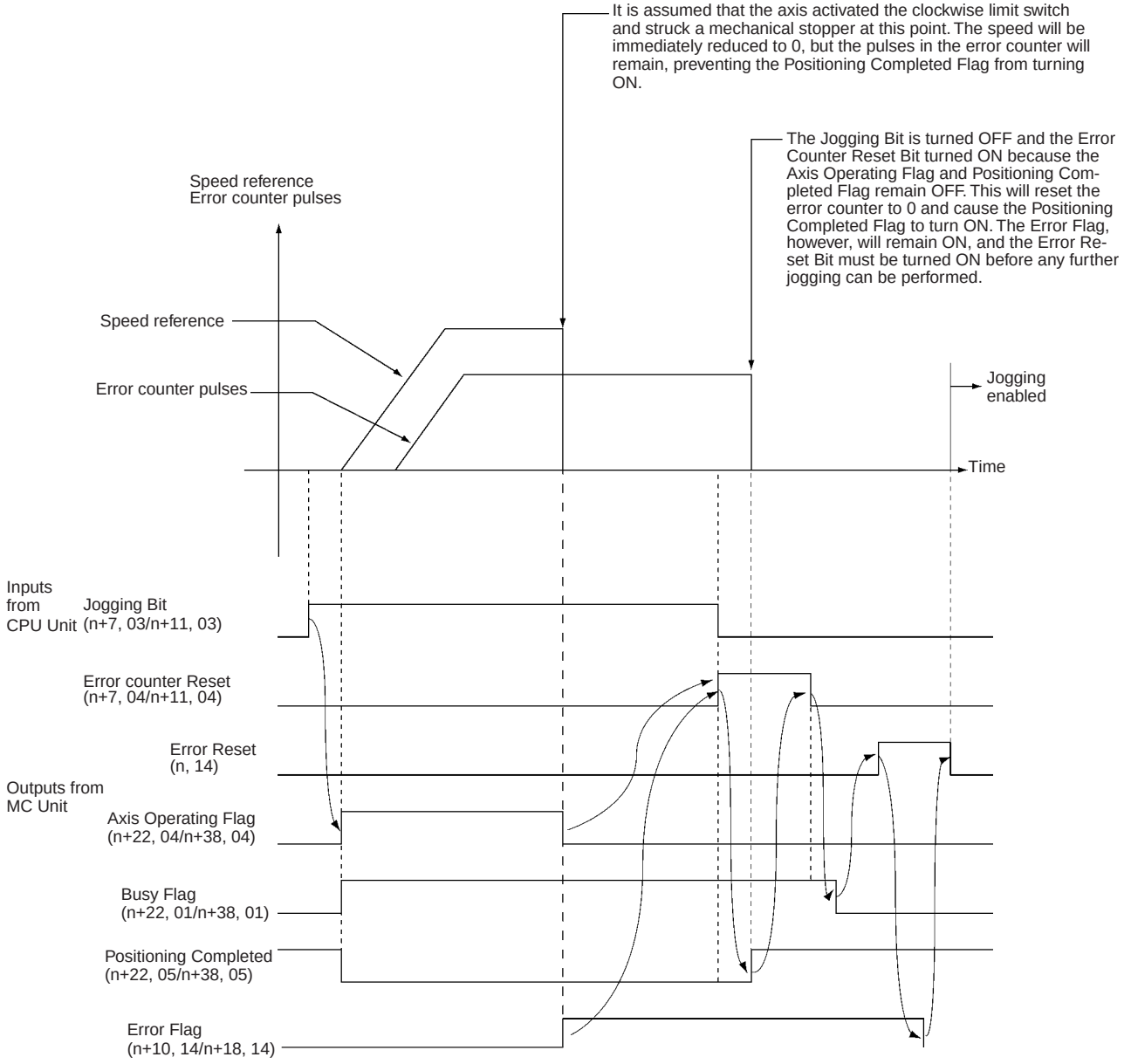

If the Error Counter Reset Bit is ON at the completion of an origin search operation, the error counter will be reset to 0.

Resetting an Error Counter in Automatic Mode

The following functions are performed by the Error Counter Reset Bit in Automatic Mode.

- The error counter is reset.
- Program execution is paused.
- Program execution is restarted.

The status of the Error Counter Reset Bit is read at the completion of movement for axis operations in Pass Mode and In-position Check OFF Mode. The timing for resetting the error counter in each mode is shown in the following illustrations.

Linear Interpolation in Stop Mode

The following example shows linear interpolation on the X axis in Stop Mode. The same functionality and timing is used for linear interpolation for multiple axes or for circular interpolation. In this example, it is assumed that the error counter warning function has been set for the error counter.

Operation in Stop Mode

In this example, the error counter is set to generate error counter warnings.

```
N000 P000 X
N010 G11                ← Stop Mode specified.
N020 G01 X100 F100
N030 G01 X-100 F100
Etc.
```

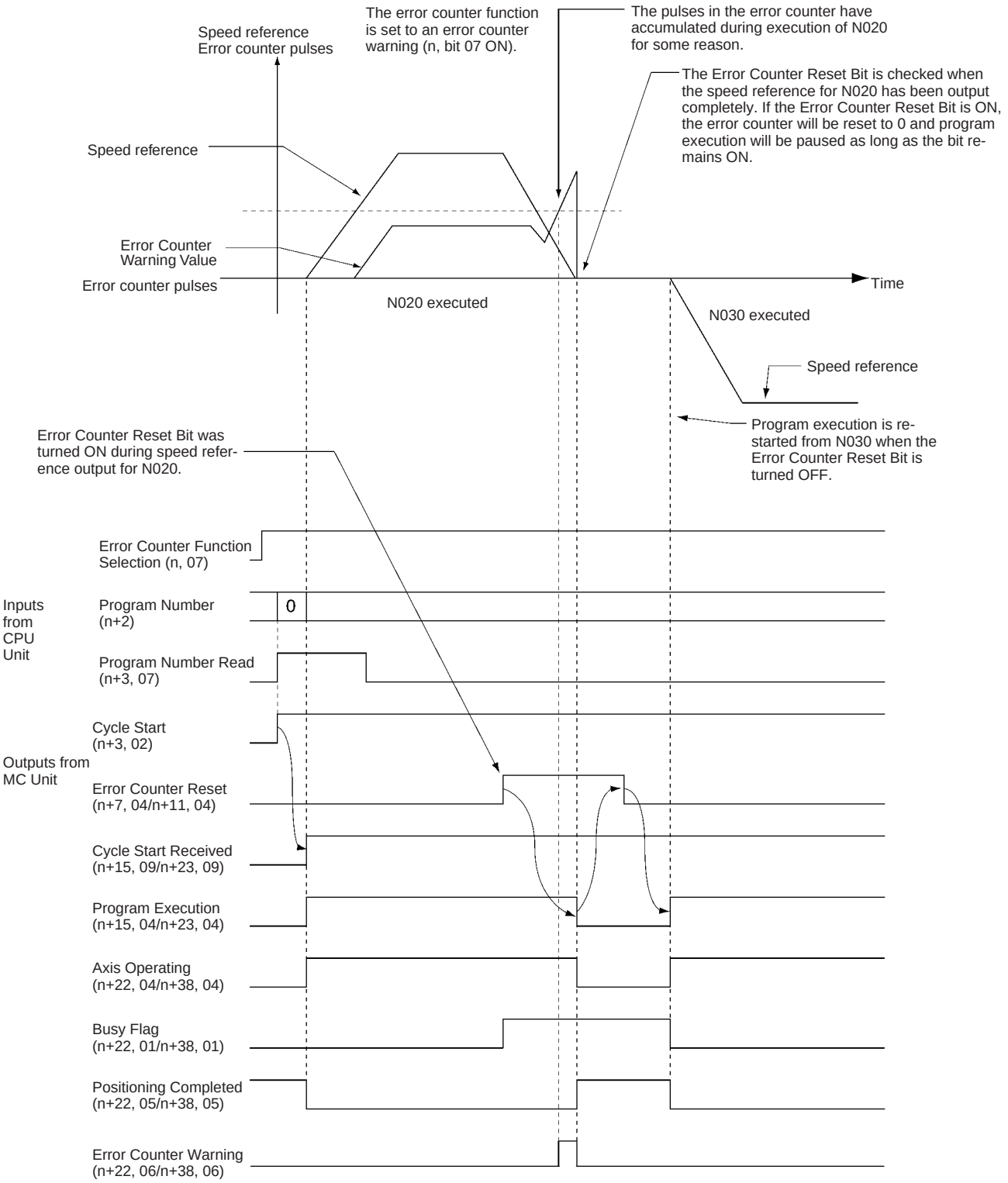

Operation in Stop Mode

```
N000 P000 X
N010 G11                ← Stop Mode specified.
N020 G01 X100 F100
N030 G01 X200 F100
N040 G01 X300 F100
etc.
```

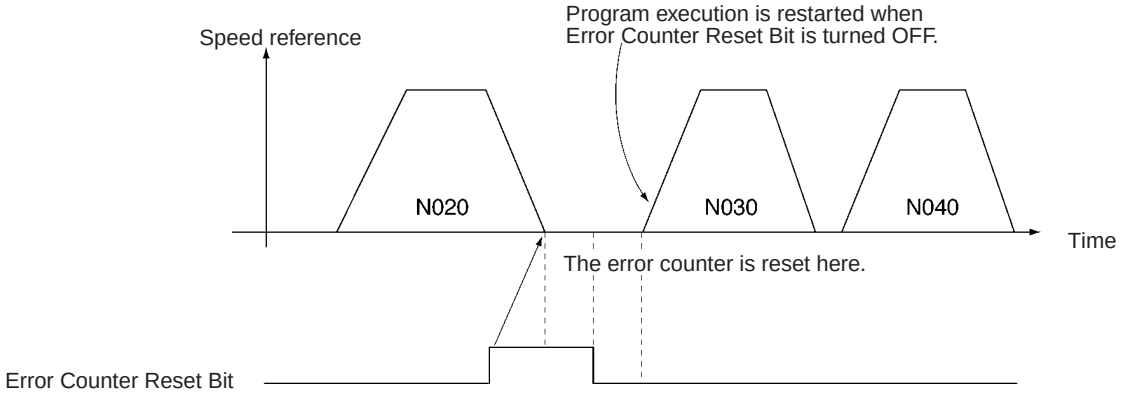

Operation in Pass Mode

```
N000 P000 X
N010 G01 X100 F100   ← Pass Mode (default)
N020 G01 X400 F150
N030 G11             ← Stop Mode specified.
N040 G01 X100 F50
etc.
```

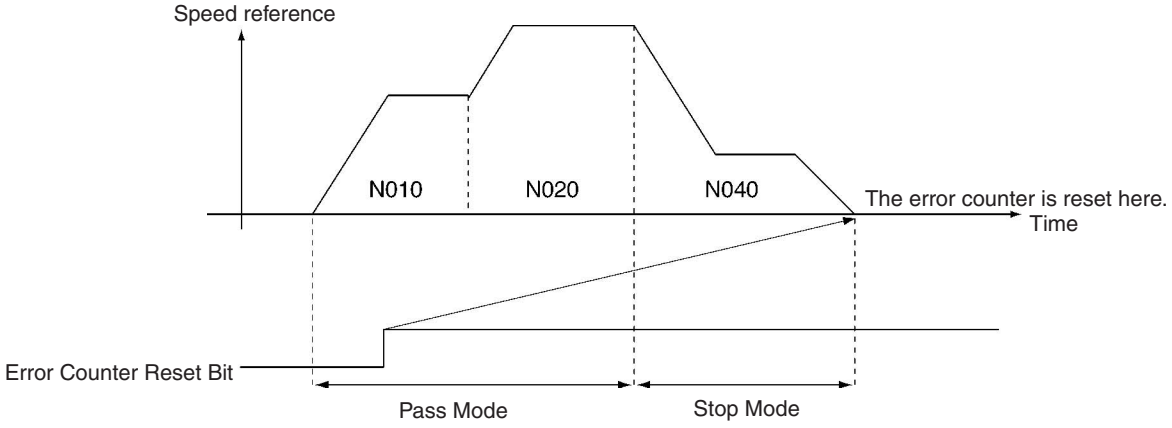

Operation in In-position Check OFF Mode

```
N000 P000 X
N010 G13              ← In-position Check OFF Mode specified.
N020 G01 X100 F100
N030 G01 X200 F100
N040 G11              ← Stop Mode specified.
N050 G01 X300 F100
etc.
```

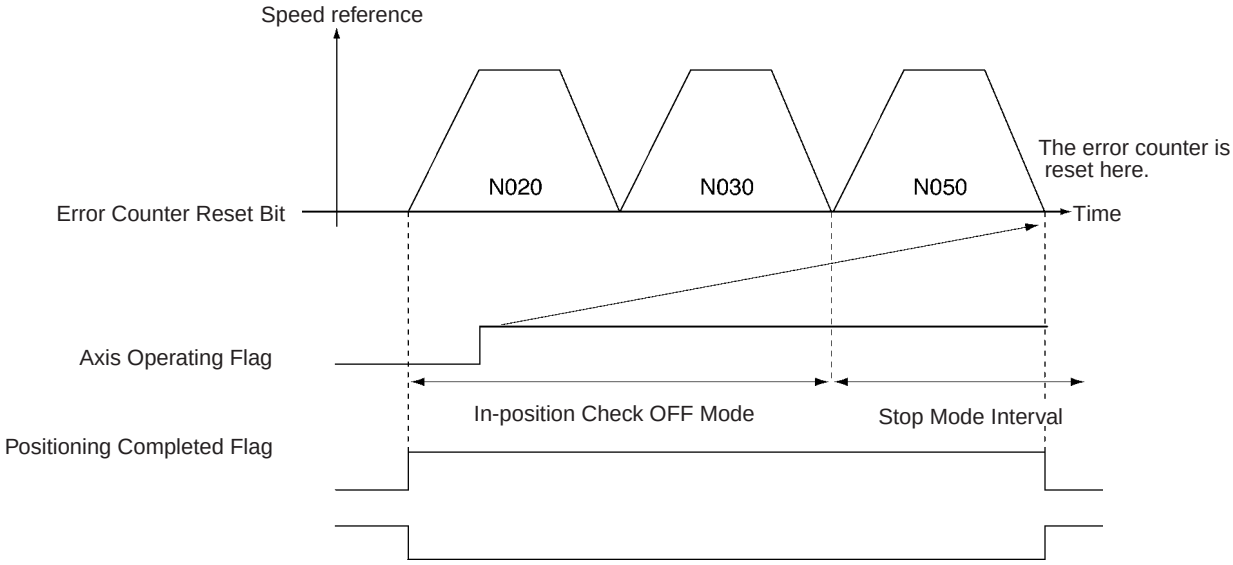

The axes will not necessarily stop at the same time when PTP control (G00, G26, G27, or G28) is being performed for two or more axes. Operation will be as follows if an Error Counter Reset Bit is turned ON during PTP control.

- Turn ON the Error Counter Reset Bit for the desired axis.
- The error counter will be reset to 0 when speed reference output has been completed for the specified axis (assuming that the Error Counter Reset Bit is still ON).
- Wait for the other axes to complete positioning.
- If an Error Counter Reset Bit is ON when all axes have stopped, program execution will be paused.
- Turn OFF the Error Counter Reset Bit to start program execution from the next block.

If the Error Counter Reset Bit is ON when a origin search is completed (G28), the error counter will be reset to 0 and program execution will be paused. Program execution will not be started again until the Error Counter Reset Bit is turned OFF.

Timing Charts

Refer to the timing charts given in the above description.

Programming Example

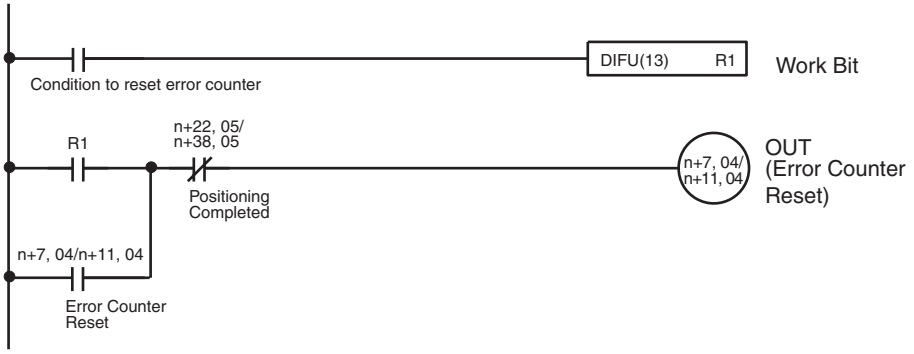

Forced Origin Bits

Word		Axis	Bit	I/O	Valid mode
MC221	MC421				
n+7	n+11	X axis	05	Output	Manual
n+9	n+13	Y axis			
---	n+15	Z axis			
---	n+17	U axis			

A Forced Origin Bit is used to set the present position to 0, and thus establishing it as the origin, eliminating the need to perform an origin search.

The bit is ignored if the Busy Flag is ON.

Keep the bit ON until the Busy Flag turns ON.

The Forced Origin operation can be performed in the servo-lock or servo-unlock status. This operation won't be interrupted while in progress even if a deceleration stop is executed.

The software limits are checked when this command is executed, and the present position won't be set to 0 and an error will occur if the position of the origin is not within the software limits.

⚠ **Caution** The Forced Origin operation for the absolute encoder axis applies only to the present position registered in the MC Unit. The present position registered in the absolute encoder will not be changed. Therefore, the position will be automatically updated to the present position registered in the absolute encoder when the servo is locked again.

Signal	Function
↑	A forced origin is set.

Timing Chart

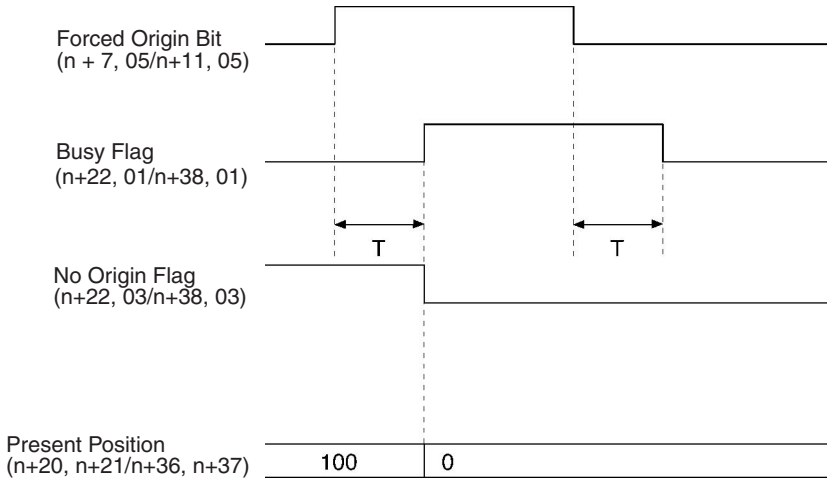

Absolute Origin Set Bits

Word		Axis	Bit	I/O	Valid mode
MC221	MC421				
n+7	n+11	X axis	06	Output	Manual
n+9	n+13	Y axis			
---	n+15	Z axis			
---	n+17	U axis			

These bits set the mechanical origin for axes using an absolute encoder. Operation depends on whether the servo is locked or unlocked.

Servo-unlock Status

The absolute position is read from the encoder, the absolute position read from the encoder is stored as the absolute position in the system parameters (machine specification parameters), and the present position in the MC Unit is set to 0. The current system parameters are then saved in non-volatile memory.

Servo-lock Status

The present position in the MC Unit is stored as the absolute position in the system parameters (machine specification parameters), and the present position in the MC Unit is set to 0. The current system parameters are then saved in non-volatile memory.

Incremental Encoder

If an incremental encoder is being used, the current system parameters are saved in non-volatile memory and nothing else is performed.

Timing

An Absolute Origin Set Bit is ignored when the Busy Flag is ON.

Keep the bit ON until the Busy Flag turns ON.

Note Do not execute this command while system parameters are being downloaded. Doing so may result in an incorrect setting of the mechanical origin.

Signal	Function
↑	Sets the absolute origin.

Timing Chart

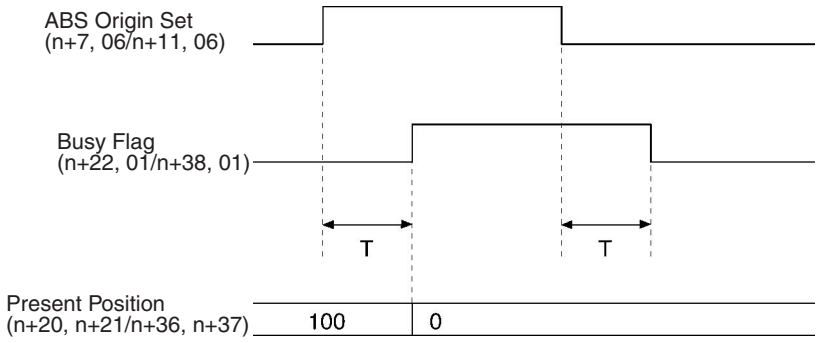

Enable MPG/Sync Encoder Bits

Word		Axis	Bit	I/O	Valid mode
MC221	MC421				
n+7	n+11	X axis	08	Output	Manual
n+9	n+13	Y axis			
---	n+15	Z axis			
---	n+17	U axis			

These bits are used to start MPG or sync encoder operation. As long as a bit is ON, the input pulses from the MPG/sync encoder will be read and multiplied by the MPG/Sync Ratio to perform MPG operation.

MPG/sync encoder operation will be stopped when the bit turns OFF.

The bit is ignored if the Busy Flag is ON.

Signal	Function
↑	Starts MPG/sync encoder operation.
1	Continues MPG/sync encoder operation.
↓	Stops MPG/sync encoder operation.

Timing Chart

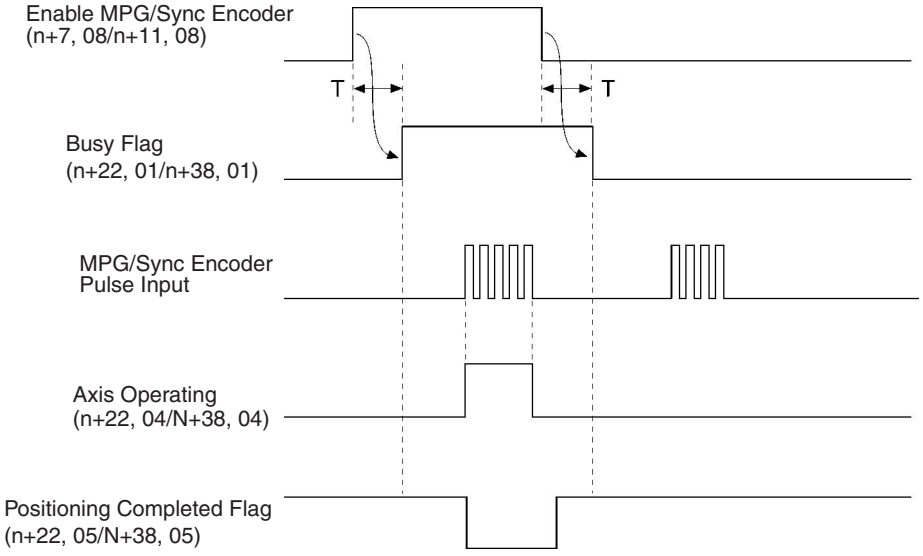

Programming Example

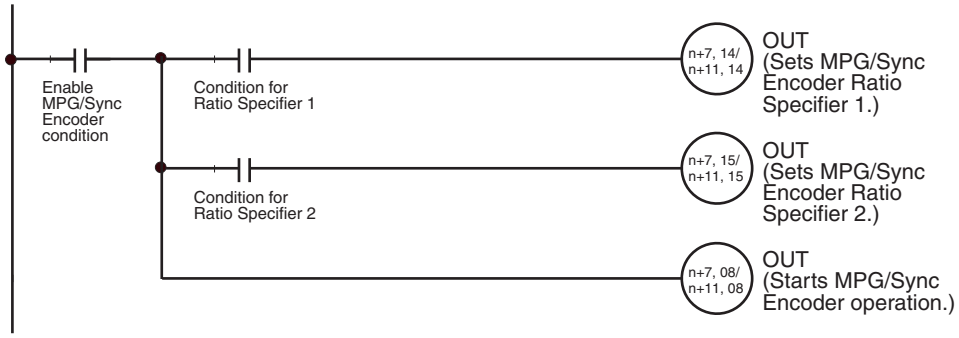

Servo-lock Bits

Word		Axis	Bit	I/O	Valid mode
MC221	MC421				
n+7	n+11	X axis	09	Output	Manual
n+9	n+13	Y axis			
---	n+15	Z axis			
---	n+17	U axis			

These bits are used to lock the servo. The processes listed below are performed when a bit turns ON. The bit is ignored if the servo is already locked.

1,2,3...

1. If an absolute encoder is being used, the present position is read from the encoder and the origin is established. The No Origin Flag will turn OFF once the present position has been established.
2. A wiring check is performed the first time the servo is locked after power is turned ON. If the wiring check is normal, wiring checks won't be performed when the servo is locked thereafter.
3. A position loop is formed in the MC Unit.
4. The Run Command Output to the Servo Driver is turned ON. This forms a position feedback.

The servo-lock process won't be interrupted even if a deceleration stop is executed. The bit is ignored if the Busy Flag is ON.

Keep the bit ON until the Servo-lock Flag turns ON and then turn it OFF when the Servo-lock Flag turns ON.

The following can be set for the servo-lock operation in system parameters: Output port setting (general output/brake output), brake OFF time, wiring check, wiring check time, and wiring check pulses. Refer to *3-3 System Parameters* for details.

⚠ **Caution** When using an absolute encoder with a G-series Servo Driver, stop the axis before locking the servo. Position slippage will occur if the servo is locked while the axis is moving.

Signal	Function
↑	Starts the servo lock.

The timing of the servo-lock operation is shown in the following illustrations.

Using Brake Signal and Wiring Check

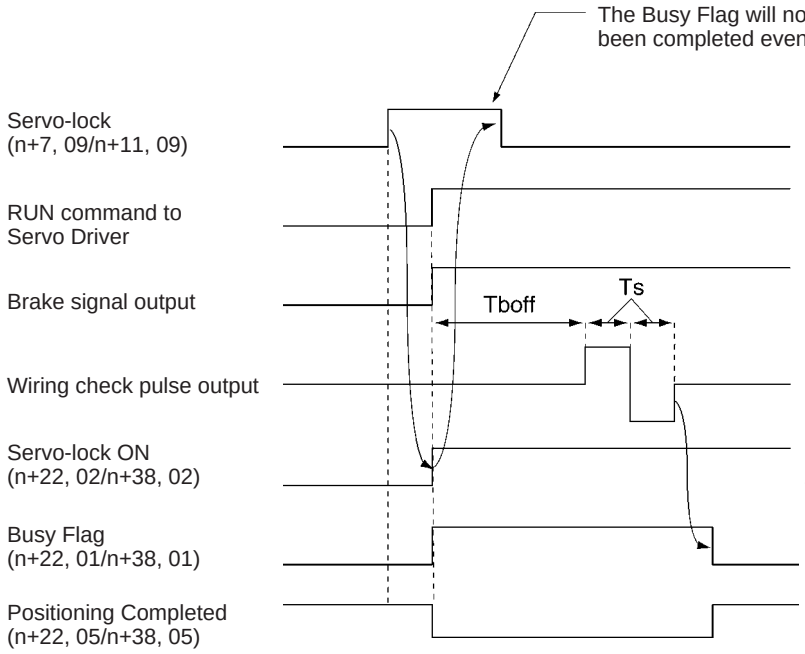

Tboff: Brake OFF time

Ts: Wiring check time

1. The Servo-lock Bit is turned ON in the CPU Unit to create a position loop, output the RUN command, and turn ON the brake signal (releasing the brake).
2. The wiring check is started after Tboff expires.
3. The wiring check pulses are output clockwise. If clockwise movement starts within Ts, the pulses are output counterclockwise. If the in-position range is reached within Ts, the wiring is judged to be normal.
4. The Busy Flag is turned OFF.

Using Brake Signal, but no Wiring Check

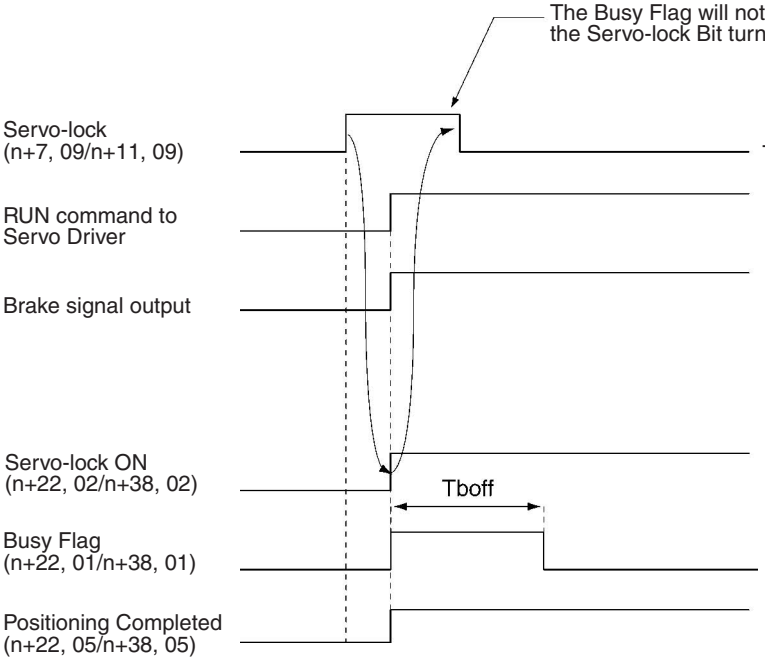

Tboff: Brake OFF time

1. The Servo-lock Bit is turned ON in the CPU Unit to create a position loop, output the RUN command, and turn ON the brake signal (releasing the brake).
2. The Busy Flag is turned OFF after Tboff expires.

No Brake Signal, but Using Wiring Check

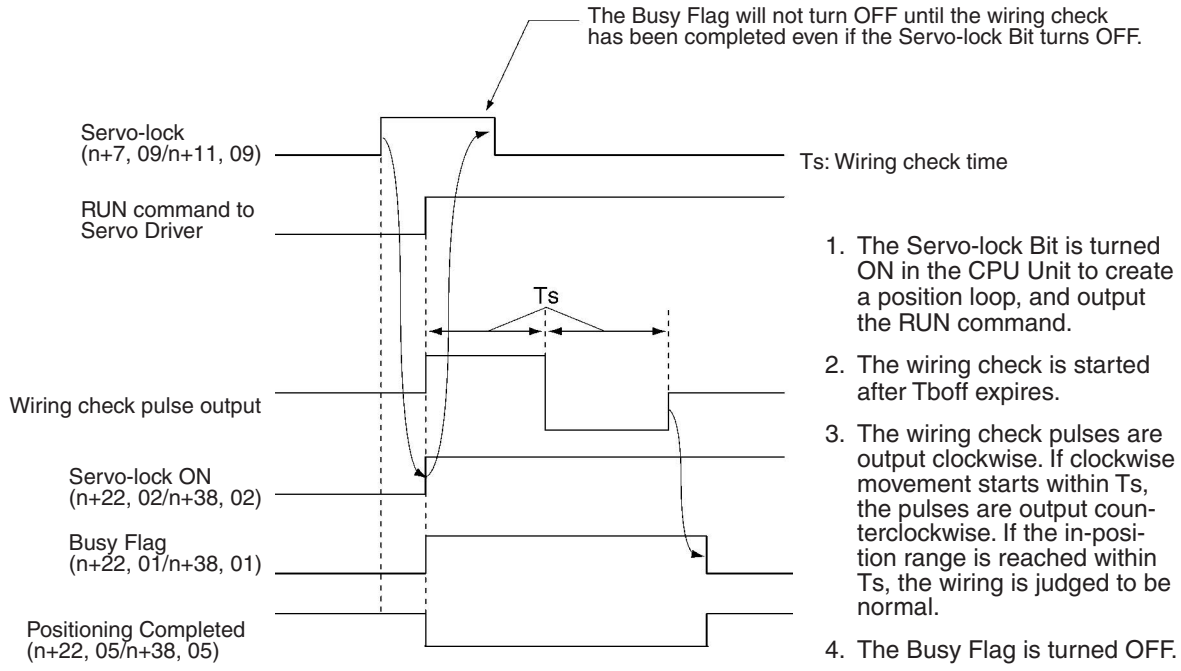

1. The Servo-lock Bit is turned ON in the CPU Unit to create a position loop, and output the RUN command.
2. The wiring check is started after Tboff expires.
3. The wiring check pulses are output clockwise. If clockwise movement starts within Ts, the pulses are output counterclockwise. If the in-position range is reached within Ts, the wiring is judged to be normal.
4. The Busy Flag is turned OFF.

No Brake Signal or Wiring Check

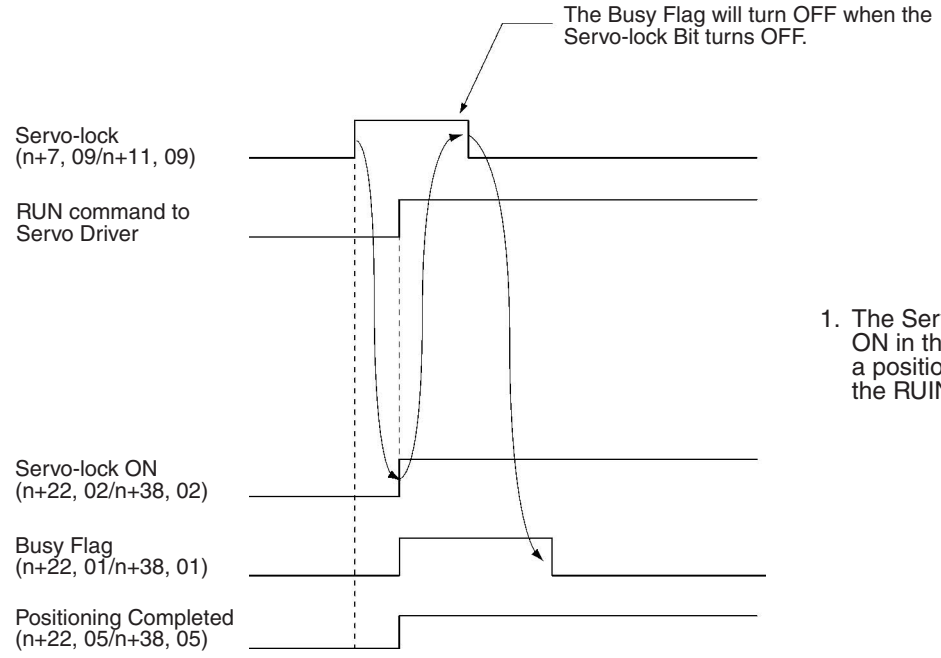

1. The Servo-lock Bit is turned ON in the CPU Unit to create a position loop, and output the RUIN command.

Processing will not be interrupted even if a deceleration stop is specified during execution of this command.

This command is ignored if the Busy Flag is ON.

Keep the command bit ON until the Servo-lock Flag turns ON. Turn OFF the command bit after the Servo-lock Flag turns ON.

Timing Charts

Refer to the timing charts given in the above description.

Programming Example

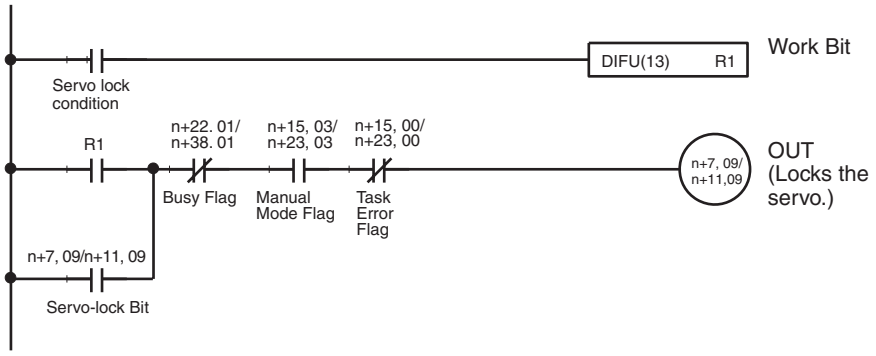

Servo-unlock Bits

Word		Axis	Bit	I/O	Valid mode
MC221	MC421				
n+7	n+11	X axis	10	Output	Manual or Auto
n+9	n+13	Y axis			
---	n+15	Z axis			
---	n+17	U axis			

When a Servo-unlock Bit is turned ON, the servo-lock is released. The RUN command to the Servo Driver will be turned OFF and the position loop will be released. The bit is ignored if the servo is already unlocked.

The servo-unlock process won't be interrupted even if the deceleration stop command is executed. A Servo-unlock Bit is ignored if the Busy Flag is ON.

Keep the bit ON until the Servo-lock Flag turns OFF and then turn OFF the bit when the Servo-lock Flag turns OFF.

Be sure that the servo axis does not fall when the servo is unlocked.

The following can be set for the servo-unlock operation in system parameters: Output port setting (general output/brake output) and brake ON time. Refer to *3-3 System Parameters* for details.

The timing of the servo-lock operation is shown in the following illustrations.

Using Brake Signal

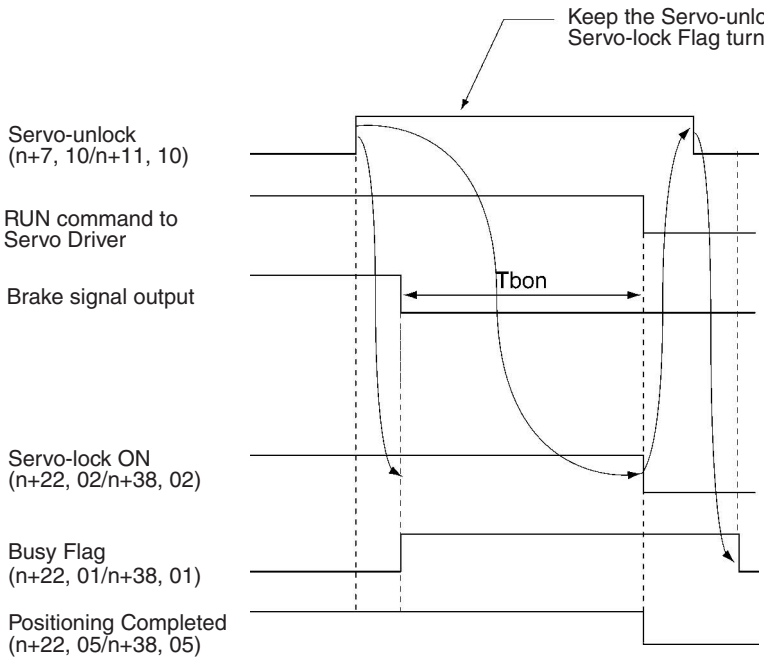

1. The Servo-unlock Bit is turned ON in the CPU Unit to turn OFF the brake signal (applying the brake).
2. After Tbon expires, the position loop is released and the RUN command to the Servo Driver is turned OFF.

Not Using Brake Signal

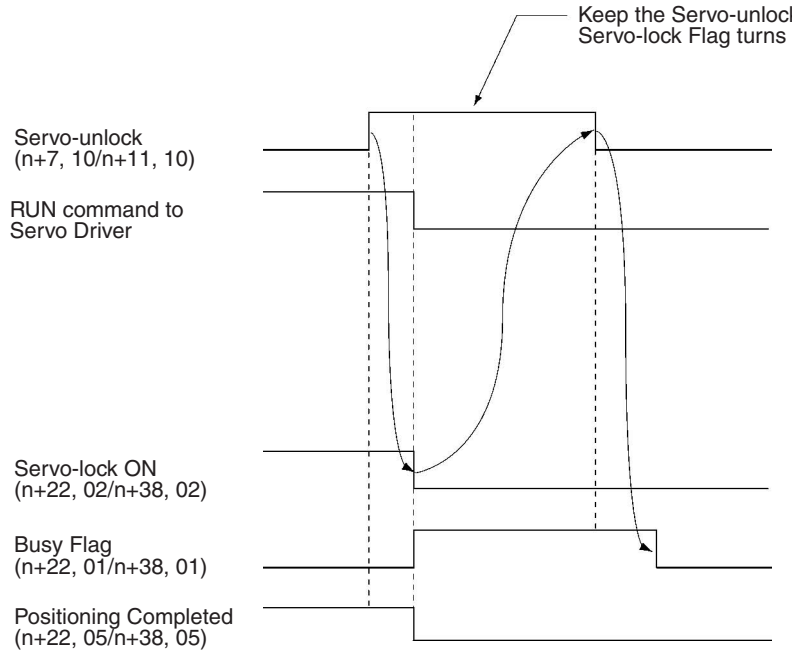

1. The Servo-unlock Bit is turned ON in the CPU Unit.
2. The position loop is released and the RUN command to the Servo Driver is turned OFF.

Processing will not be interrupted even if a deceleration stop is specified during execution of this command.

Keep the command bit ON until the Servo-lock Flag turns OFF. Turn OFF the command bit after the Servo-lock Flag turns OFF.

Precautions

- Other manual commands and MC program execution will not be possible while a Servo-unlock Bit is ON. Turn the bit OFF before attempting other operations.
- Program execution will be canceled if a Servo-unlock Bit is turned ON. Use the following procedure to restart program execution from the same block.

1,2,3...

1. Switch to Manual Mode and lock the servo.
2. Switch back to Automatic Mode.
3. Turn ON the Cycle Start Bit. Program execution will start from the block where program execution was canceled.

Signal	Function
↑	Servo-unlock operation started.

Timing Charts

Refer to the timing charts given in the above description.

Programming Example

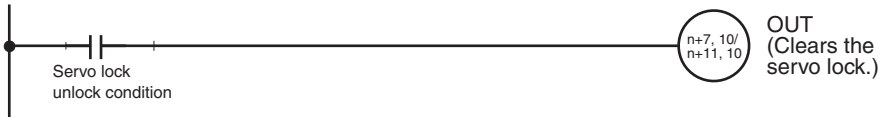

Driver Alarm Reset Bits

Word		Axis	Bit	I/O	Valid mode
MC221	MC421				
n+7	n+11	X axis	11	Output	Manual or Auto
n+9	n+13	Y axis			
---	n+15	Z axis			
---	n+17	U axis			

These bits are used to control the Driver Alarm Reset Outputs, outputs to the Servo Drivers. They are usually OFF. When a bit is turned ON, the Driver Alarm Reset Output turns ON as well.

Keep the bit ON until the Driver Alarm Input turns OFF.

Signal	Function
1	Turns ON the Driver Alarm Reset Output.
0	Turns OFF the Driver Alarm Reset Output.

Timing Chart

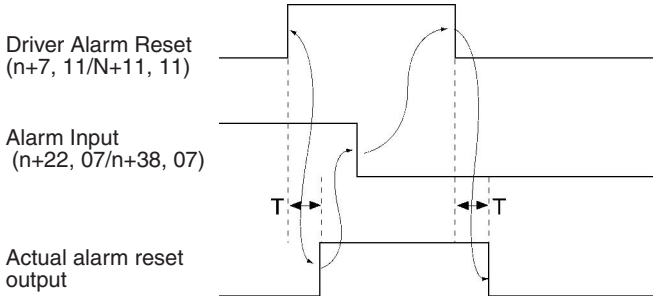

Programming Example

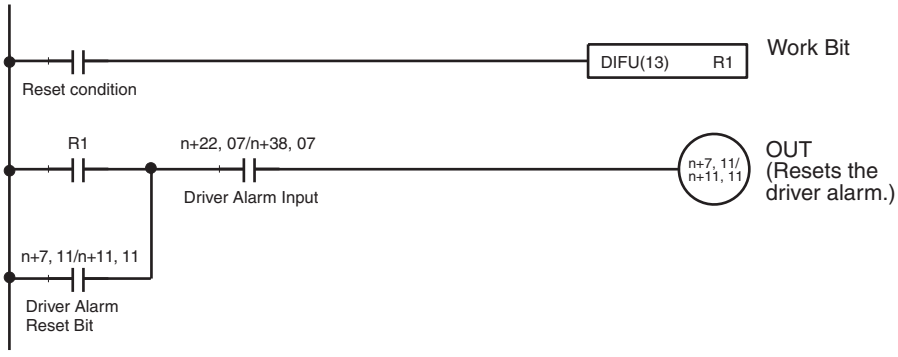

Override Setting Bits

Word		Axis	Bit	I/O	Valid mode
MC221	MC421				
n+7	n+11	X axis	12	Output	Manual or Auto
n+9	n+13	Y axis			
---	n+15	Z axis			
---	n+17	U axis			

These bits are used to change the feed rates. When a bit is turned ON, the override set for the axis will be read and applied.

When a bit is OFF, operation will be determined by the override function selection (see note) as follows:

Override function selection = 0000 hex: The overrides are applied.
Override function selection = 0001 hex: An override of 100% is applied regardless of the override settings.

Note The override function selection can be used only with Unit Ver. 1.15 or later, and with Units whose model number ends in -V1.

The overrides that can be applied are as follows:

Mode	Operation	Setting range
Automatic	G00 (POSITIONING)	0.1% to 100.0%
	G01 (LINEAR INTERPOLATION)	0.1% to 199.9%
	G02, G03 (CIRCULAR INTERPOLATION)	0.1% to 199.9%
	G26 (REFERENCE ORIGIN RETURN)	0.1% to 100.0%
	G27 (WORKPIECE ORIGIN RETURN)	0.1% to 100.0%
	G28 (ORIGIN SEARCH) (When moving from the mechanical origin to the reference origin)	0.1% to 100.0%
	G30 (SPEED CONTROL)	0.1% to 100.0%
	G31 (INTERRUPT FEED)	0.1% to 199.9%
	G32 (TRAVERSE)	0.1% to 199.9%
Manual	Jogging	0.1% to 100.0%
	Manual origin return	0.1% to 100.0%

The override setting must be between 0.1% and 199.9%. If the setting is between 0.1% and 199.9%, but not within the setting ranges given above, it will automatically be adjusted to maximum value in the range.

When the power is turned ON and the override setting isn't enabled with an Override Setting Bit, the override will be set to 100.0% automatically.

Signal	Function
1	Enables the override.
0	Disables the override.

Timing Chart

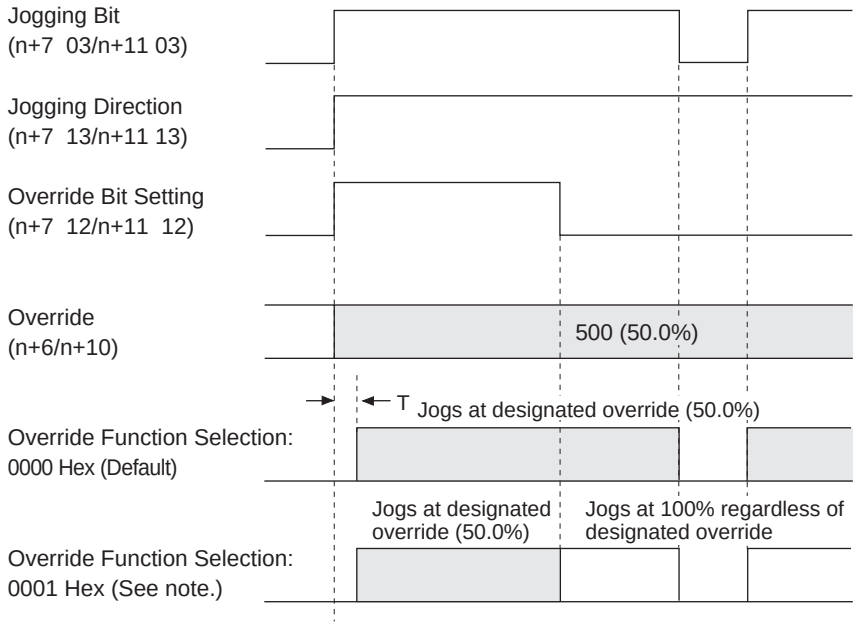

Note: Can be used with Unit Ver. 1.15 or later, and with Units whose model number ends in -V1. Unit Ver. 1.14 or earlier will use default operation.

Programming Example

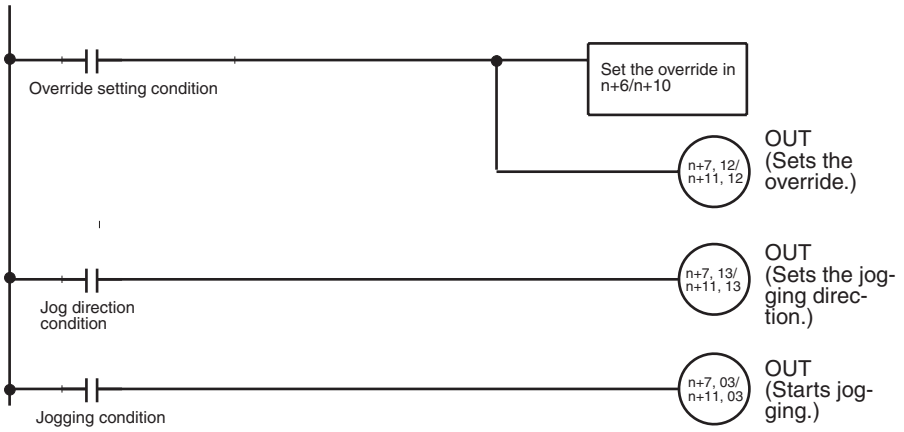

Jog Direction Bits

Word		Axis	Bit	I/O	Valid mode
MC221	MC421				
n+7	n+11	X axis	13	Output	Manual
n+9	n+13	Y axis			
---	n+15	Z axis			
---	n+17	U axis			

These bits determine which directions the axes will be jogged. They are used together with the Jogging Bit. The status of the Jog Direction Bit is read when the Jogging Bit is turned ON and has the following meaning.

ON: Negative (The direction that reduces the present value.)
OFF: Positive (The direction that increases the present value.)

Signal	Function
1	Sets the jog direction to negative.
0	Sets the jog direction to positive.

Timing Chart and Programming Example

Refer to the description of the *Jogging Bits* on page 283.

MPG/Sync Encoder Ratio Specifiers 1, 2

Word		Axis	Bits	I/O	Valid mode
MC221	MC421				
n+7	n+11	X axis	14, 15	Output	Manual
n+9	n+13	Y axis			
---	n+15	Z axis			
---	n+17	U axis			

These bits are used to specify which MPG/sync encoder ratio is used in MPG operation. The status of these bits is checked continuously during MPG/sync encoder operation.

These bits are used in the following combination.

Bit 14	Bit 15	MPG ratio used
OFF	OFF	Ratio (1) in the Feedrate Parameters.
ON	OFF	Ratio (2) in the Feedrate Parameters.
OFF	ON	Ratio (3) in the Feedrate Parameters.
ON	ON	Ratio (4) in the Feedrate Parameters.

Timing Chart and Programming Example

Refer to the description of the *Enable MPG/Sync Encoder Bits* on page 292.

5-4-5 System Status

Error Type Data

Word		Bits	I/O	Valid mode
MC221	MC421			
n+10	n+18	00 to 13	Input	---

The bits in the Error Type Data Word indicate the location of errors that occur.

Bit				Error	Remarks
03	02	01	00		
0	0	0	0	Normal (no error)	Error Flag will be OFF.
0	0	0	1	System error	Error Flag will turn ON too.
0	0	1	0	Task 1 error	
0	0	1	1	Task 2 error	
0	1	0	0	Task 3 error (See note.)	
0	1	0	1	Task 4 error (See note.)	
0	1	1	0	X-axis error	
0	1	1	1	Y-axis error	
1	0	0	0	Z-axis error (See note.)	
1	0	0	1	U-axis error (See note.)	

Note The CS1W-MC221 does not support tasks 3, task 4, the Z axis, or the U axis.

The Error Type Data can be used to identify the task and axis for which an error occurred when the Error Flag (n+10, 14/n+18, 14) turns ON. An error code will also be stored in n+11/n+19).

Timing Chart

The following timing chart shows the status when an error occurs for task 1.

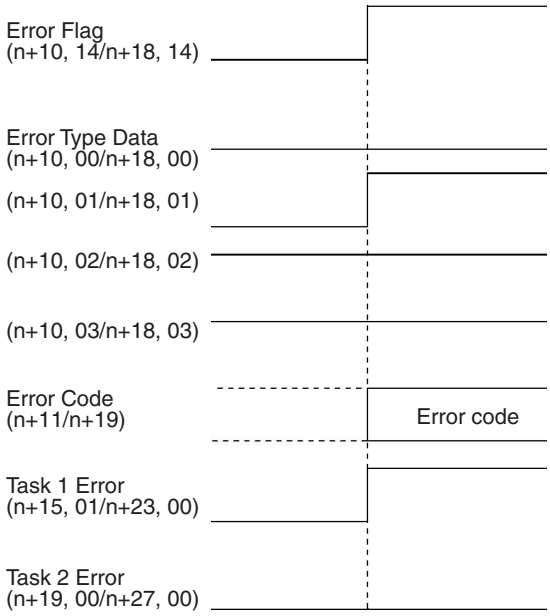

Autoloading Flag

Word		Bit	I/O	Valid mode
MC221	MC421			
n+10	n+18	04	Input	---

The Autoloading Flag will turn ON when downloading is started for the data for a job number specified in the IOWR instruction in the ladder program. The flag will turn OFF when all of the data has been downloaded.

This flag will turn OFF if the Autoloading Error Reset Bit is turned ON.

Signal	Meaning
1	Autoloading has started.
↓	Autoloading has been completed.

Timing Chart

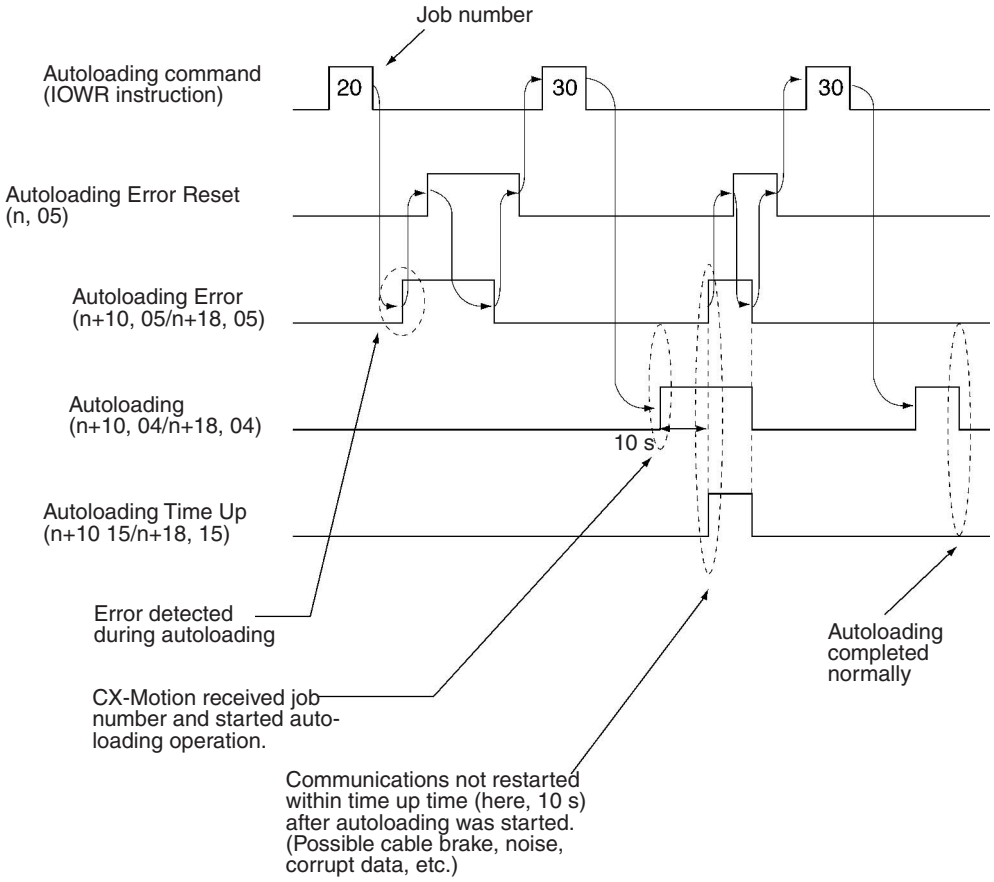

Autoloading Error Flag

Word		Bit	I/O	Valid mode
MC221	MC421			
n+10	n+18	05	Input	---

The Autoloading Error Flag will turn ON when an error occurs at the start of or during autoloading. The following errors can be detected.

Errors on CX-Motion

The following items are checked on the CX-Motion when the IOWR instruction is executed in the CPU Unit and errors are generated if any problems are found.

- Job number range
- Computer setup (e.g., no floppy disk, hard disk corruption, etc.)
- Nonexistence of specified program
- Nonexistence of specified position data

Error in MC Unit

The Autoloading Time Up Flag will be turned ON if communications are not possible within the monitor time set in the system parameters.

The Autoloading Error Flag will turn OFF when the Autoloading Error Reset Bit is turned ON.

Signal	Meaning
1	An error has occurred during autoloading.
↓	The Autoloading Error Flag has been turned ON.

Timing Chart Refer to the timing chart for the *Autoloading Error Reset Bit* on page 262.

Data Transmission Flag

Word		Bit	I/O	Valid mode
MC221	MC421			
n+10	n+18	06	Input	---

The Data Transmission Flag will turn ON when position data is written to the MC Unit as a result of executing the Position Data Write Command (17D6 hex) for the Command Area using the IOWR instruction in the ladder diagram.

The flag will turn OFF when the Data Transmission Error Flag turns ON as a result of an error while writing data or when the writing the data has been completed normally.

Signal	Meaning
1	Data transmission has started.
↓	The data transmission has been completed normally or an error occurred during the transmission.

Timing Chart Refer to the timing chart for the IOWR instruction in *4-2 IOWR and IORD Specifications*.

Data Transmission Error Flag

Word		Bit	I/O	Valid mode
MC221	MC421			
n+10	n+18	07	Input	---

The Data Transmission Error Flag will turn ON when a fatal error occurs while writing position data to the MC Unit as a result of executing the Position Data Write Command (17D6 hex) for the Command Area using the IOWR instruction in the ladder diagram. Using the IOWR instruction for any address other than 17D6 hex will not affect this flag regardless of the results.

Signal	Meaning
1	An error occurred during data transmission.
↓	Data was retransmitted normally.

Timing Chart Refer to the timing chart for the IOWR instruction in *4-2 IOWR and IORD Specifications*.

Data Reception Flag

Word		Bit	I/O	Valid mode
MC221	MC421			
n+10	n+18	08	Input	---

The Data Reception Flag will turn ON when position data is read as a result of executing the Position Data Read Command (17D7 hex) for the Command Area using the IOWR instruction in the ladder diagram. This flag will not turn

ON for read error with the IORD instruction. (Refer to *4-2 IOWR and IORD Specifications* for details on IORD.)

Signal	Meaning
1	Data reception has started.
↓	The data reception has been completed normally or an error occurred during the reception.

Timing Chart

Refer to the timing chart for the IOWR instruction in *4-2 IOWR and IORD Specifications*.

Data Reception Error Flag

Word		Bit	I/O	Valid mode
MC221	MC421			
n+10	n+18	09	Input	---

The Data Reception Error Flag will turn ON when a fatal error occurs while receiving position data from the MC Unit using the IOWR instruction in the ladder diagram. (The IOWR instruction is used to transfer large quantities of data using a command area.)

This flag will be turned ON for the following errors.

The = Flag will turn ON for the following errors, but the Error Flag in the PLC Interface Area will turn ON and the read will not be completed normally.

- Illegal data is read (i.e., memory is corrupted).

Signal	Meaning
1	An error occurred during data reception.
↓	Data was retransmitted and received normally.

Timing Chart

Refer to the timing chart for the IOWR instruction in *4-2 IOWR and IORD Specifications*.

Flash Memory Write Flag

Word		Bit	I/O	Valid mode
MC221	MC421			
n+10	n+18	10	Input	---

The Flash Memory Write Flag turns ON while writing data to the MC Unit as a result of executing a Flash Memory Write Command (17D4 or 17D5 hex) for the Command Area using the IOWR instruction in the ladder diagram.

The Error Flag (n+10, 14/n+18, 14) will turn ON if an error occurs while writing to flash memory.

The Flash Memory Write Flag will turn OFF when the write to flash memory ends normally.

Signal	Meaning
1	A write has been started to flash memory.
↓	The write to flash memory has been completed normally or an error occurred during the write (i.e., the Error Flag has turned ON).

Timing Chart

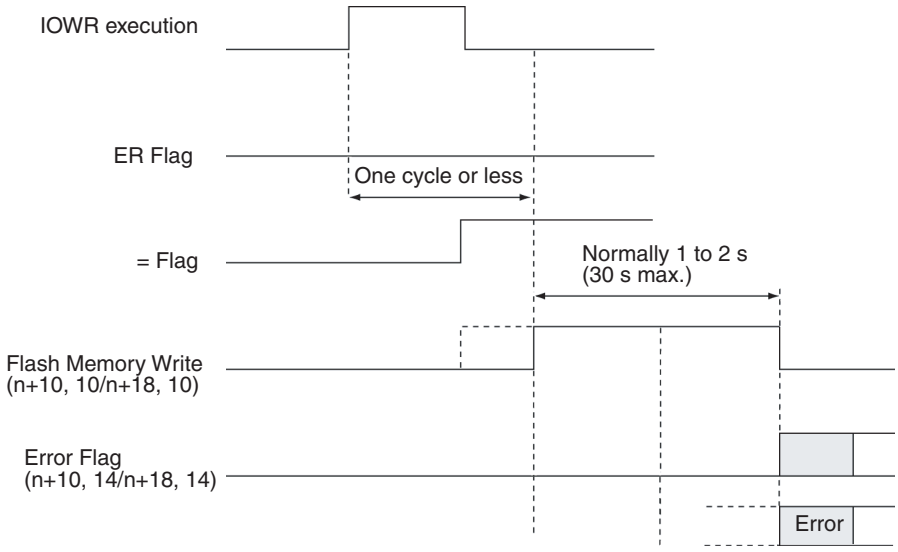

Teaching Box in Enable Mode Flag

Word		Bit	I/O	Valid mode
MC221	MC421			
n+10	n+18	11	Input	---

The Teaching Box in Enable Mode Flag is ON when the Teaching Box is in Enabled Mode. Use this flag as a condition to interlock the ladder program for this mode.

When this flag is ON, the only commands that can be received from the CPU Unit are the Error Counter Function Selection, Deceleration Stop, Forced Block End, Pause, Optional Inputs, and M Code Reset.

Refer to the *Teaching Box Operation Manual* (W320) for more details on the Teaching Box's Enabled Mode.

Signal	Meaning
1	The Teaching Box is in Enabled Mode.
0	The Teaching Box isn't in Enabled Mode.

Teaching Box in Protect Mode Flag

Word		Bit	I/O	Valid mode
MC221	MC421			
n+10	n+18	12	Input	---

The Teaching Box in Protect Mode Flag is ON when the Teaching Box is in Protect Mode. Use this flag as a condition to interlock the ladder program for this mode.

No operations except the Error Counter Function Selection can be performed from the CPU Unit when this flag is ON.

Refer to the *Teaching Box Operation Manual* (W320) for more details on the Teaching Box's Protect Mode.

Signal	Meaning
1	The Teaching Box is in Protect Mode.
0	The Teaching Box isn't in Protect Mode.

Error Flag

Word		Bit	I/O	Valid mode
MC221	MC421			
n+10	n+18	14	Input	---

The Error Flag turns ON when an error occurs.

Check the Error Type Data and Error Code to find the type of error.

If more than one error occurs, the error type data and error code indicate the error detected first. The order of priority for detecting the system, task, and axis errors is as follows: System, task 1, task 2, task 3, task 4, X axis, Y axis, Z axis, and U axis.

This flag is turned OFF when the Error Reset Bit is turned ON.

This flag is turned ON again when another error is detected.

When an error occurs, the Error Flag will be turned ON immediately for system errors in Manual Mode and for the following errors:

003C: Driver alarm input
003E: Clockwise overtravel
0043: Clockwise software limit
0048: Emergency stop input
0057: MPG ratio overflow
003D: Error counter overflow
003F: Counterclockwise overtravel
0044: Counterclockwise software limit
004D: Present position counter overflow
0058: Feedback pulse error

The Error Flag will turn ON at the completion of a deceleration stop for other errors.

Signal	Meaning
1	An error has occurred.
0	No error has occurred.

Timing Chart

The following timing chart shows the status when an error has occurred for task 1.

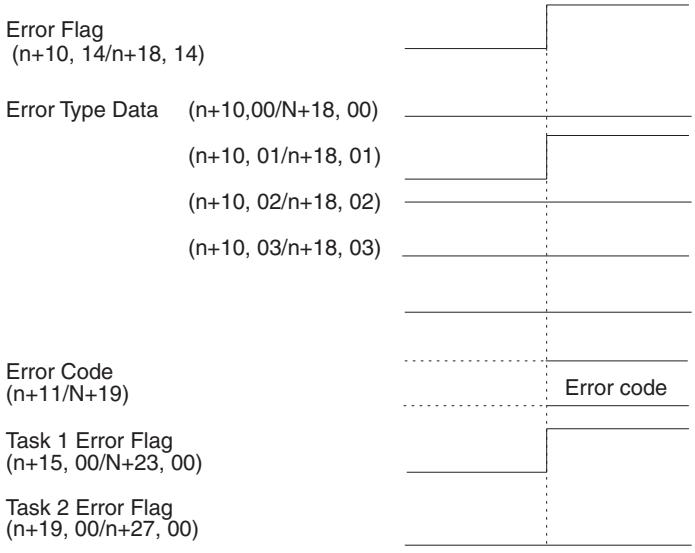

Autoloading Time Up Flag

Word		Bit	I/O	Valid mode
MC221	MC421			
n+10	n+18	15	Input	---

The Autoloading Time Up Flag will turn ON if the time set for the Autoload Time Up Time in the system parameters expires. This situation will occur while waiting for data to be downloaded after executing the Autoloading Command (17D8 hex) for the Command Area using the IOWR instruction in the ladder diagram.

If this flag turns ON, the Autoloading Error Flag (n+10, 05/n+18, 05) will also turn ON.

The Autoloading Time Up Flag will remain ON until it is reset by turning ON the Autoloading Error Reset Flag.

You can prevent the Autoloading Time Up Flag from turning ON by increasing the Time Up Time or by setting the time to 00 when the time does not need to be monitored.

Signal	Meaning
1	The communications interval with the CX-Motion has exceeded the Time Up Time while autoloading.
↓	The Autoloading Error Reset Flag has been turned ON.

Timing Chart

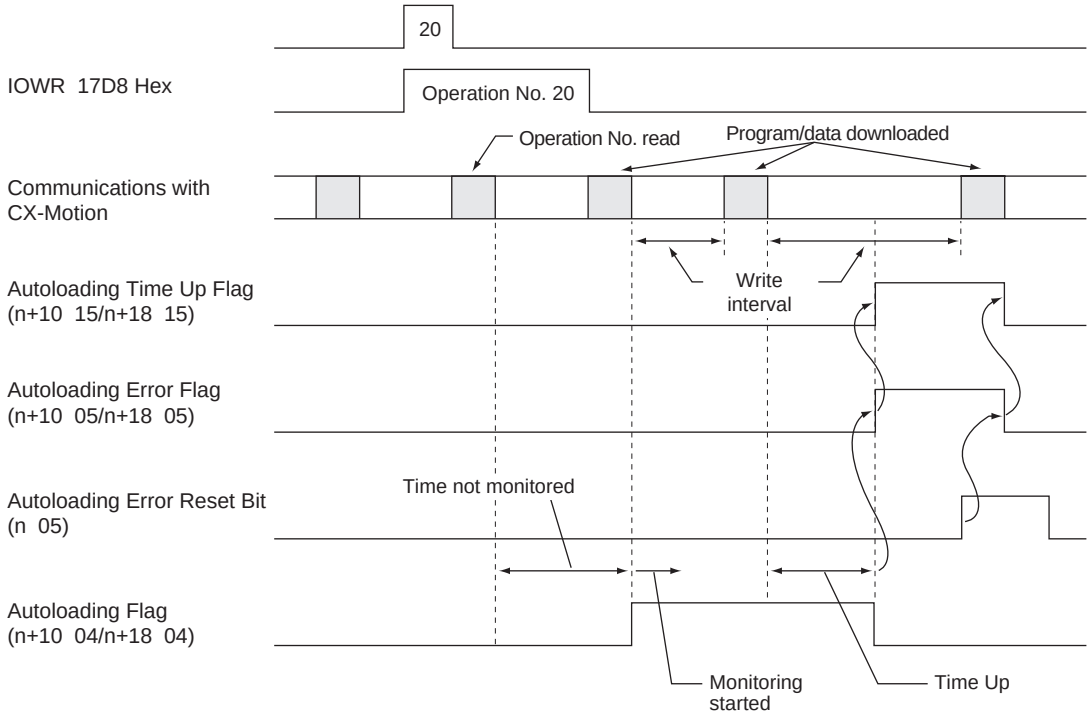

Error Code

Word		Bits	I/O	Valid mode
MC221	MC421			
n+11	n+19	00 to 15	Input	---

A 4-digit hexadecimal error code is stored when an error has occurred in the MC Unit.

15			0
$x16^3$	$x16^2$	$x16^1$	$x16^0$

Normal (no error): 0000

The error code will be 0000 when there is no error. The error code is valid when the Error Flag is ON.

The location of the error can be determined in the Error Type Data (system, task 1 to 4, X to U axes).

Refer to *Section 12 Troubleshooting* for details on error codes.

Timing Chart Refer to the timing charts for the *Autoloading Error Flag* on page 303.

5-4-6 Task Status

Tasks 1 to 4 M Codes

Word		Task	Bits	I/O	Valid mode
MC221	MC421				
n+12	n+20	Task 1	00 to 15	Input	---
n+16	n+24	Task 2			
---	n+28	Task 3			
---	n+32	Task 4			

The task M code will be stored as a 4-digit hexadecimal value between 0000 and 03E7 (decimal: 0000 and 0999) in the following form.

15			0
0	$x16^2$	$x16^1$	$x16^0$

The M code will be valid when the M Strobe Flag is ON.

Timing Chart Refer to the timing chart for the *M Strobe Flags* on page 314.

Tasks 1 to 4 Executing Program Numbers

Word		Task	Bits	I/O	Valid mode
MC221	MC421				
n+13	n+21	Task 1	00 to 15	Input	---
n+17	n+25	Task 2			
---	n+29	Task 3			
---	n+33	Task 4			

The program number of the program being executed (or being paused) in each task will be stored as a 4-digit hexadecimal value between 0000 and 03E7 (decimal: 0000 and 0999) in the following form.

15			0
0	$x16^2$	$x16^1$	$x16^0$

Timing Chart Refer to the timing chart for the *Cycle Start Bits* on page 268.

Executing Block Numbers

Word		Task	Bits	I/O	Valid mode
MC221	MC421				
n+14	n+22	Task 1	00 to 15	Input	---
n+18	n+26	Task 2			
---	n+30	Task 3			
---	n+34	Task 4			

The block number of the block being executed (or being paused) in each task will be stored as a 4-digit hexadecimal value between 0000 and 03E7 (decimal: 0000 and 0999) in the following form.

15			0
0	$x16^2$	$x16^1$	$x16^0$

Timing Chart

Refer to the timing chart for the *Cycle Start Bits* on page 268.

Task Error Flags

Word		Task	Bit	I/O	Valid mode
MC221	MC421				
n+15	n+23	Task 1	00	Input	---
n+19	n+27	Task 2			
---	n+31	Task 3			
---	n+35	Task 4			

A Task Error Flag will turn ON when one of the following error occurs.

- A program error.
- An error of an axis controlled by the task.

The Task Error Flag will be turned OFF if the Error Reset Bit is turned ON, but if the cause of the error isn't corrected, the Task Error Flag will be turned ON again the next time the task is executed.

The Error Flag (n+10, 14/n+18, 14) will be turned ON when a Task Error Flag is turned ON.

Signal	Meaning
↑	A task error has occurred.
↓	The Task Error Reset Bit has been turned ON
0	Normal operation.

Timing Chart

Refer to the timing chart for the *Autoloading Error Flag* on page 303.

Automatic Mode Flags

Word		Task	Bit	I/O	Valid mode
MC221	MC421				
n+15	n+23	Task 1	02	Input	---
n+19	n+27	Task 2			
---	n+31	Task 3			
---	n+35	Task 4			

The Automatic Mode Flag will be ON when the task is in Automatic Mode. Always make sure that this flag is ON when starting MC program execution (with the Cycle Start Bit). The Cycle Start Bit will be ignored if this flag is OFF.

Use the four flags listed below to determine the operating status of a task in Automatic Mode. When the program is executed from the Teaching Box, the flags will change just as they do in Automatic Mode. These flags are all turned OFF when the mode is switched from Automatic to Manual Mode.

- Program Execution Flag
- Program Execution Completed Flag
- Optional Input Standby Flag
- M Code Reset Standby Flag

The Automatic Mode Flag won't be turned ON during system initialization, even if an Automatic Mode Command is received from the CPU Unit. The flag will be turned ON when initialization has been completed and the Unit is able to received commands in Automatic Mode. Initialization takes about 700 ms.

Signal	Meaning
1	The task is in Automatic Mode.
0	The task is not in Automatic Mode.

Timing Chart Refer to the timing chart for the *Automatic/Manual Mode Bits* on page 267.

Manual Mode Flags

Word		Task	Bit	I/O	Valid mode
MC221	MC421				
n+15	n+23	Task 1	03	Input	---
n+19	n+27	Task 2			
---	n+31	Task 3			
---	n+35	Task 4			

The Manual Mode Flag will be ON when the task is in Manual Mode. Always make sure that this flag is ON when executing commands that are valid only in Manual Mode. Those commands will be ignored if this flag is OFF.

This flag won't be turned ON during system initialization, even if an Manual Mode Command is received from the CPU Unit. The flag will be turned ON when initialization has been completed and the Unit is able to received commands in Manual Mode. Initialization takes about 700 ms.

Signal	Meaning
1	The task is in Manual Mode.
0	The task is not in Manual Mode.

Timing Chart Refer to the timing chart for the *Automatic/Manual Mode Bits* on page 267.

Program Execution Flag

Word		Task	Bit	I/O	Valid mode
MC221	MC421				
n+15	n+23	Task 1	04	Input	---
n+19	n+27	Task 2			
---	n+31	Task 3			
---	n+35	Task 4			

The Program Execution Flag will be ON when an MC program is being executed in Automatic Mode. This flag is also ON when the M code is being reset. The flag will remain ON when decelerating to a stop; it will be turned OFF when the axes are fully stopped.

The Program Execution Flag will turn OFF when the servo is unlocked or during an acceleration stop when a Servo Driver error has occurred.

Use the status of the Program Execution Flag to determine how long to keep ON control bits such as the Pause Bit or Forced Block End Bit when executing those commands. This flag can also be used as an interlock condition, checking whether the MC program is being executed or not.

Signal	Meaning
1	An MC program is being executed.
0	An MC program is not being executed.

Timing Chart

Refer to the timing chart for the *Program Execution Completed Flags* on page 312.

Program Execution Completed Flags

Word		Task	Bit	I/O	Valid mode
MC221	MC421				
n+15	n+23	Task 1	05	Input	---
n+19	n+27	Task 2			
---	n+31	Task 3			
---	n+35	Task 4			

The Program Execution Completed Flag will turn ON when a G79 command (PROGRAM END) is executed. Use the Program Execution Completed Flag to determine when to turn OFF the Cycle Start Bit. Turn OFF the Cycle Start Bit when the Program Execution Flag turns OFF.

The Program Execution Flag will turn OFF when the Program Execution Completed Flag turns ON.

The Program Execution Completed Flag will be turned OFF again the next time the MC program is executed. This bit will be turned OFF when the mode is switched from Automatic to Manual Mode, but it will be turned ON again when the mode is switched back to Automatic Mode.

Signal	Meaning
1	MC program execution has ended (i.e., G79 was executed).
↓	MC program execution has started or the mode has been switched from Automatic to Manual Mode.

Timing Chart

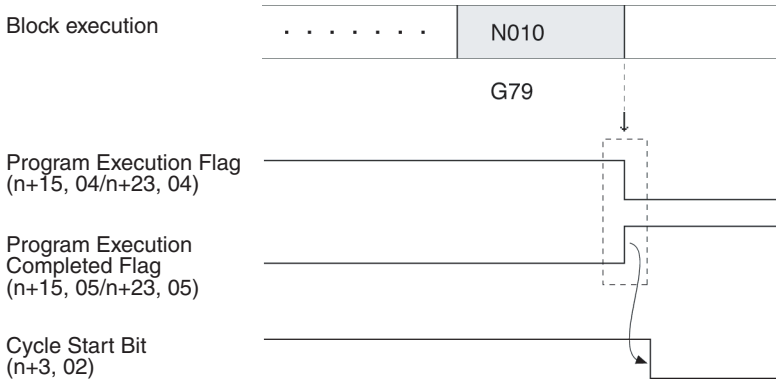

Optional Input Standby Flags

Word		Task	Bit	I/O	Valid mode
MC221	MC421				
n+15	n+23	Task 1	06	Input	---
n+19	n+27	Task 2			
---	n+31	Task 3			
---	n+35	Task 4			

An Optional Input Standby Flag will turn ON when a G-code command that waits for an optional input is being executed. The Unit will be in a standby status while the flag is ON; turn the optional input ON from the ladder program. The following standby states are possible:

- The OPTIONAL STOP command (G76) stops MC program execution waits for the input to go OFF.
- If an optional input is added as a parameter in an INTERPOLATION command (G00, G01, or G03), the command will be executed when the specified optional input turns ON.

Signal	Meaning
1	Waiting for an optional input.
0	Not waiting for an optional input.

M Code Reset Standby Flags

Word		Task	Bit	I/O	Valid mode
MC221	MC421				
n+15	n+23	Task 1	07	Input	---
n+19	n+27	Task 2			
---	n+31	Task 3			
---	n+35	Task 4			

An M Code Reset Standby Flag will be ON whether MC program execution has been stopped to wait for an M code to be reset. When this flag is ON, MC program execution won't continue until the M Code Reset Bit is turned ON and then OFF again. The standby status occurs when an M code from 0 to 499 is output.

The Program Execution Flag will turn ON when the M Code Reset Standby Flag turns ON.

It is convenient to use this flag when determining whether an M code stands by for an M code reset (M codes 0 to 499) or not (M codes 500 to 999).

This flag turns ON when positioning is completed, even if the stopover function is used.

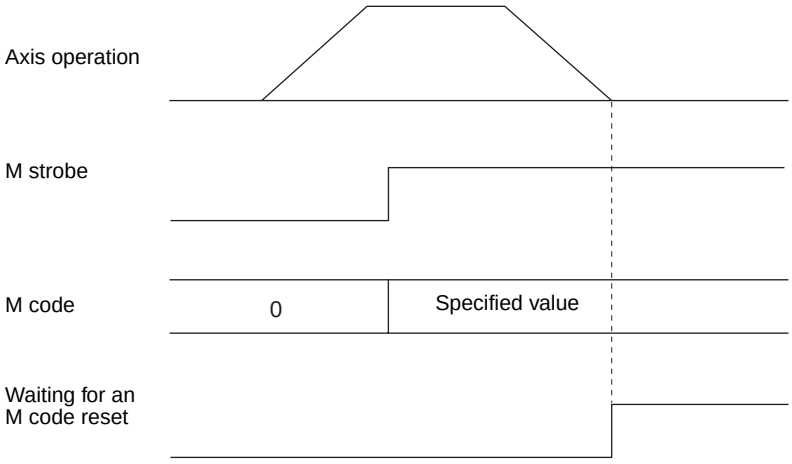

Signal	Meaning
1	Waiting for an M code reset.
0	Not waiting for an M code reset.

M Strobe Flags

Word		Task	Bit	I/O	Valid mode
MC221	MC421				
n+15	n+23	Task 1	08	Input	---
n+19	n+27	Task 2			
---	n+31	Task 3			
---	n+35	Task 4			

The M Strobe Flags will be ON when an M code is being output.

Signal	Meaning
1	There is an M code being output (0 to 999).
0	There isn't an M code output.

Timing Chart 1

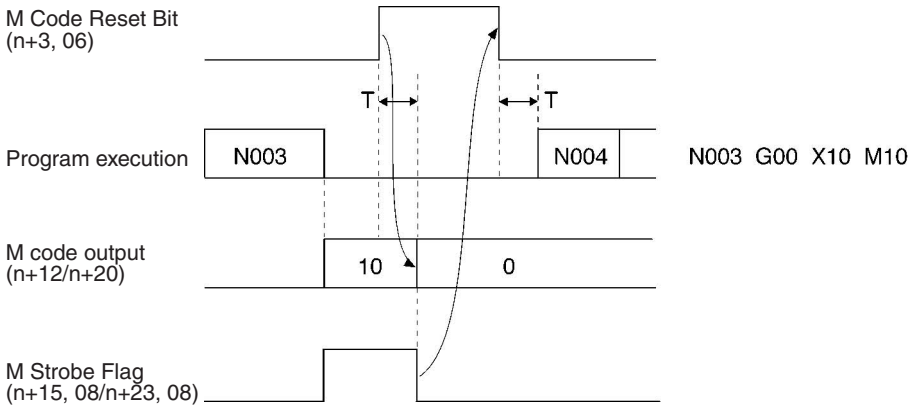

Timing Chart 2

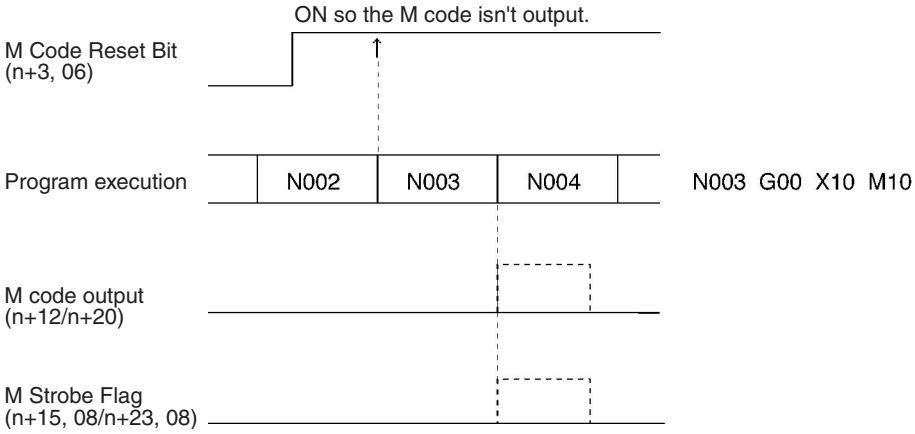

Cycle Start Received Flags

Word		Task	Bit	I/O	Valid mode
MC221	MC421				
n+15	n+23	Task 1	09	Input	---
n+19	n+27	Task 2			
---	n+31	Task 3			
---	n+35	Task 4			

A Cycle Start Received Flag will turn ON when the Cycle Start Signal (rising) is received. Use this flag to control Cycle Start Bit timing when executing one block at a time (single block execution).

Signal	Meaning
1	A valid Cycle Start Bit signal has been received.
0	The Cycle Start Bit is OFF.

Timing Chart

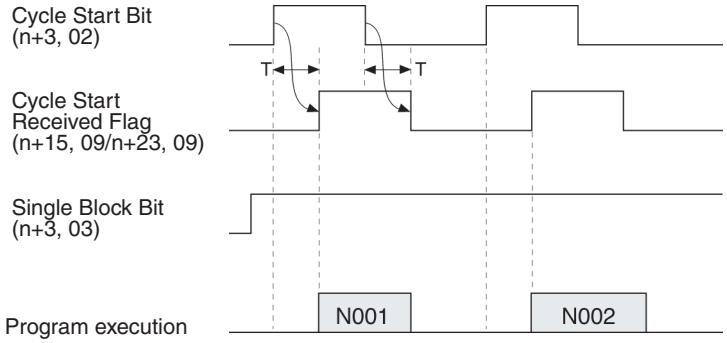

Teaching Completed Flags

Word		Task	Bit	I/O	Valid mode
MC221	MC421				
n+15	n+23	Task 1	13	Input	---
n+19	n+27	Task 2			
---	n+31	Task 3			
---	n+35	Task 4			

The Teaching Completed Flag will turn ON when the teaching has been completed. Use this flag together with the Teaching Bit.

Signal	Meaning
1	Teaching has been completed (even if an error has occurred).
↓	The Teaching Bit has turned OFF.

Timing Chart

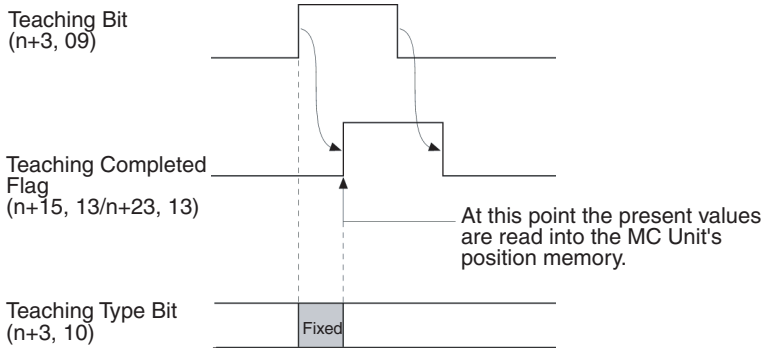

Teaching Error Flags

Word		Task	Bit	I/O	Valid mode
MC221	MC421				
n+15	n+23	Task 1	14	Input	---
n+19	n+27	Task 2			
---	n+31	Task 3			
---	n+35	Task 4			

The Teaching Error Flag will turn ON if a teaching error occurs. When an error has occurred, the Teaching Completed Flag and Teaching Address Setting Completed Flag will be turned ON at the same time.

For example, errors will occur in the following cases:

- Teaching Bit is turned ON, but the origin hasn't been established.
- Teaching address isn't between 0 and 1999 (0 to 7CF hex).

Set the teaching address if both the Teaching Error Flag and the Teaching Address Overflow Flag turn ON at the same time.

Signal	Meaning
1	A teaching error has occurred.
↓	The next teaching has been completed normally.

Timing Chart

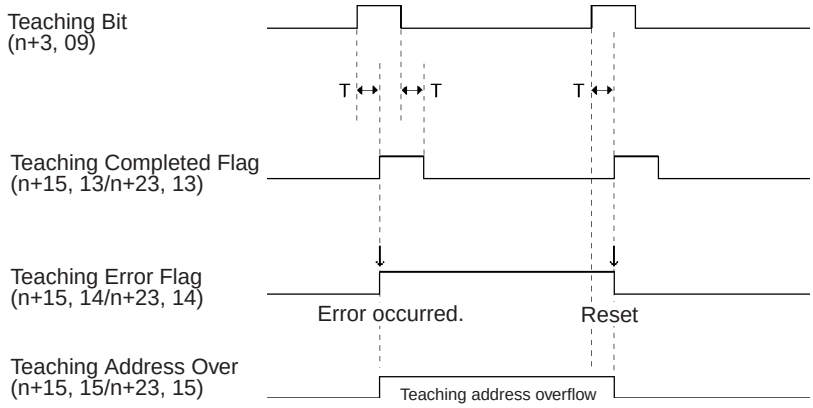

Teaching Address Overflow Flags

Word		Task	Bit	I/O	Valid mode
MC221	MC421				
n+15	n+23	Task 1	15	Input	---
n+19	n+27	Task 2			
---	n+31	Task 3			
---	n+35	Task 4			

A Teaching Address Overflow Flag will turn ON if the teaching address is not within the range of position data addresses allocated to the task after executing a Teaching Command (17E2 to 17E5 hex) for the Command Area using the IOWR instruction in the ladder diagram or after turning ON the Teaching Bit (one for each task: n+3, 09, n+7, 09, n+9, 09).

The above error can occur at the following times.

- The teaching address set for IOWR is not within the range of position data addresses.
- The following condition was not met when turning on the Teaching Bit. (Current teaching address + Number of axes in task) must be within the position data range for the task. (The current teaching address is set in the Command Area, the number of axes in the task is set in the unit parameters, and the task position data range is set in the memory management parameters.)

Signal	Meaning
1	The position data address range has been exceeded.
↓	Teaching has been completed normally either via the Teaching Bit or the IOWR instruction. (See note.)

Note The Teaching Address Overflow Flag will not be refreshed immediately after the IOWR instruction is executed. Check the flag status in the next cycle.

Timing Charts

Teaching Bit

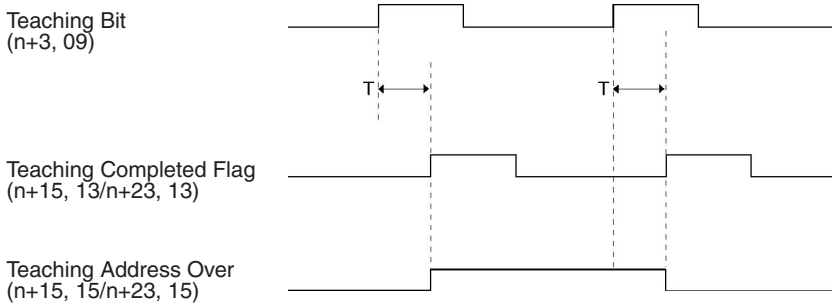

5-4-7 Axis Status Flags

X- to U-axis Present Positions

Words		Axis	Bits	I/O	Valid mode
MC221	MC421				
n+20/n+21	n+36/n+37	X axis	00 to 15	Input	---
n+23/n+24	n+39/n+40	Y axis			
---	n+42/n+43	Z axis			
---	n+45/n+46	U axis			

The present position of the reference coordinate system is output as 32-bit signed data for each axis. The position of the decimal point is determined by the system parameter settings.

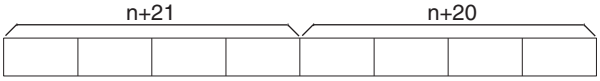

Range: FD9DA601 to 026259FF hex (–39999999 to 39999999 decimal)

Example:
The present position of –100 (FFFF FF9C hex) is output as shown below. When the minimum setting unit for the X axis is 0.1 this value will be displayed as –10.0.

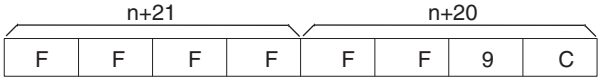

Reference Origin Flags

Word		Axis	Bit	I/O	Valid mode
MC221	MC421				
n+22	n+38	X axis	00	Input	---
n+25	n+41	Y axis			
---	n+44	Z axis			
---	n+47	U axis			

A Reference Origin Flag will turn ON when the axis reaches or passes the reference origin and is within the in-position range specified in the system parameters.

Signal	Meaning
1	The axis is within the reference origin's in-position range.
0	The axis isn't within the reference origin's in-position range.

Busy Flags

Word		Axis	Bit	I/O	Valid mode
MC221	MC421				
n+22	n+38	X axis	01	Input	---
n+25	n+41	Y axis			
---	n+44	Z axis			
---	n+47	U axis			

A Busy Flag will turn ON when a command is being executed in Manual Mode. The Busy Flag will be turned ON when one of the following commands is being executed.

Origin Search
Reference Origin Return
Jogging
Error Counter Reset
Present Position Preset
ABS Origin Set
Servo-lock
Servo-unlock
MPG/Sync Encoder Enable

The Busy Flag will turn OFF when the bit controlling the command is turned OFF. Commands other than Servo Unlock can't be received while the Busy Flag is ON.

Signal	Meaning
↑	Command execution has started in Manual Mode.
1	The Manual Mode command is being processed.
↓	The command's control bit has been turned OFF.

Timing Chart

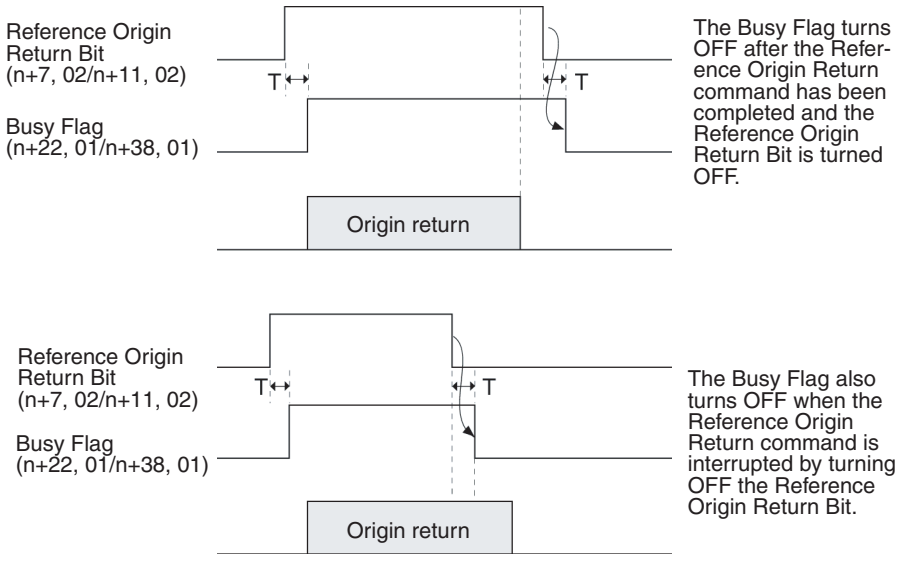

Servo-lock ON Flags

Word		Axis	Bit	I/O	Valid mode
MC221	MC421				
n+22	n+38	X axis	02	Input	---
n+25	n+41	Y axis			
---	n+44	Z axis			
---	n+47	U axis			

A Servo-lock ON Flag will turn ON when the servo is locked. The servo lock is the status in which the Run command is output to the Servo Driver. Execute positioning commands when this flag is ON; an error will occur if they are executed when this flag is OFF.

Signal	Meaning
1	The servo is locked.
0	The servo is unlocked.

Timing Chart

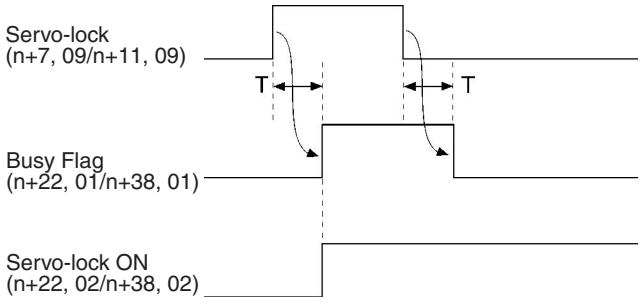

No Origin Flags

Word		Axis	Bit	I/O	Valid mode
MC221	MC421				
n+22	n+38	X axis	03	Input	---
n+25	n+41	Y axis			
---	n+44	Z axis			
---	n+47	U axis			

A No Origin Flag will turn ON when the reference origin isn't established. Execute positioning commands in Automatic Mode or origin returns in Manual Mode while this flag is OFF. An error will occur if operations requiring an origin are attempted when the flag is OFF.

The No Origin Flag will turn ON in the following cases:

- The power is turned ON and the machine parameter's origin search method isn't set to "set origin at power on" for an incremental axis.
- Data from the absolute encoder was not read properly for an absolute axis.
- A wiring error, feedback pulse error, or present position counter overflow resulted when the MC Unit is in origin search operation.
- G29 (ORIGIN UNDEFINED) was executed.

The origin will be established and the No Origin Flag will be turned OFF in the following cases:

Absolute Axes

- Data is read properly from the absolute encoder.

Incremental Axes

- The power is turned ON and the machine parameter's origin search method is set to "set origin at power on."
- An origin search operation is completed normally.
- A Present Position Preset Command is executed.
- A G54 command (CHANGE REFERENCE COORDINATE SYSTEM PV) is executed.

Signal	Meaning
1	The reference origin has been established.
0	The reference origin has not been established.

Timing Chart

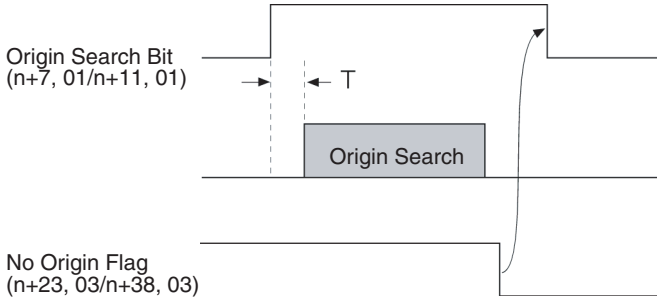

Axis Operating Flags

Word		Axis	Bit	I/O	Valid mode
MC221	MC421				
n+22	n+38	X axis	04	Input	---
n+25	n+41	Y axis			
---	n+44	Z axis			
---	n+47	U axis			

An Axis Operating Flag will turn ON when the axis is operating. An operating axis is an axis that is being given a command value to move the axis.

For example, when the axis is being operated with a trapezoidal curve, the axis is operating from the start of the acceleration command to the end of the deceleration command.

Use the Axis Operating Flag to determine when the axis has stopped after executing a Deceleration Stop Command.

Signal	Meaning
1	An axis movement command is being executed.
0	An axis movement command isn't being executed.

Timing Chart

The following example shows a trapezoidal reference output to the motor.

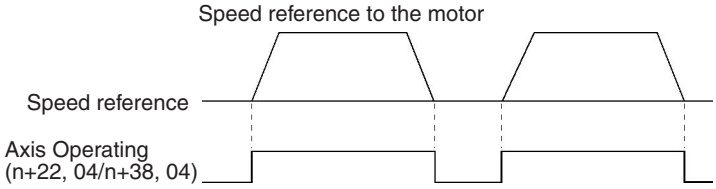

Positioning Completed Flags

Word		Axis	Bit	I/O	Valid mode
MC221	MC421				
n+22	n+38	X axis	05	Input	---
n+25	n+41	Y axis			
---	n+44	Z axis			
---	n+47	U axis			

A Positioning Completed Flag will turn ON when the axis reaches its target position in a positioning operation and the axis is within the in-position range specified in the system parameters.

Once the axis enters the in-position range of the target position and the Positioning Completed Flag is turned ON, the flag will remain ON until the next positioning operation is performed, even if the axis leaves the in-position range.

The Positioning Completed Flag will turn ON if the positioning operation is interrupted before the target position is reached but the axis is within the in-position range.

In-position checks are performed during MPG/sync encoder operation and the flag will turn ON when the axis is within the in-position range.

When a positioning operation is started, the Positioning Completed Flag will be turned OFF at the same time that the Axis Operating Flag is turned ON.

Use the Positioning Completed Flag as a condition to check when the target position has been reached and the next command can be executed.

Signal	Meaning
1	The axis is within the in-position range.
0	The axis isn't within the in-position range.

Timing Chart

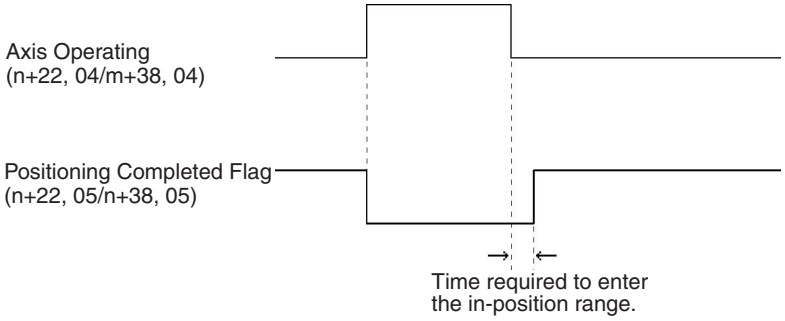

Error Counter Warning Flags

Word		Axis	Bit	I/O	Valid mode
MC221	MC421				
n+22	n+38	X axis	06	Input	---
n+25	n+41	Y axis			
---	n+44	Z axis			
---	n+47	U axis			

The Error Counter Warning Flag are enabled when the Error Counter Function Selection is set for an error counter warning.

An Error Counter Warning Flag will turn ON when the number of pulses in the error counter exceeds the error counter warning value specified in the servo

parameters. The flag will be turned ON as a warning only, and positioning operations will continue as normal.

Signal	Meaning
1	The error counter exceeds the error counter warning value.
0	The error counter is less than the error counter warning value.

Alarm Input Flags

Word		Axis	Bit	I/O	Valid mode
MC221	MC421				
n+22	n+38	X axis	07	Input	---
n+25	n+41	Y axis			
---	n+44	Z axis			
---	n+47	U axis			

An Alarm Input Flag will turn ON when the driver alarm input is ON and will turn OFF when the alarm input is OFF.

Signal	Meaning
1	The driver alarm input is ON.
0	The driver alarm input is OFF.

Timing Chart

Refer to the timing chart for the *Driver Alarm Reset Bits* on page 298.

Zone 1 to 8 Flags

Word		Axis	Bits	I/O	Valid mode
MC221	MC421				
n+22	n+38	X axis	08 to 15	Input	---
n+25	n+41	Y axis			
---	n+44	Z axis			
---	n+47	U axis			

A Zone Flag will turn ON when the axis is within the zone specified in the parameters.

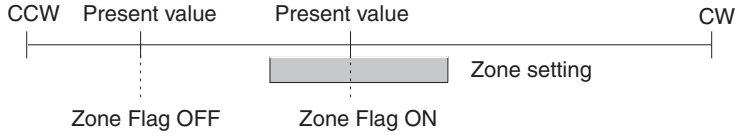

Signal	Meaning
1	The axis is within the zone.
0	The axis is outside of the zone.

SECTION 6
Basic Positioning Operations

This section explains the basic positioning operations executed by the MC Unit.

6-1 Overview 326
6-1-1 Summary of Operations 326
6-2 PTP Control 327
6-3 Linear Interpolation 328
6-4 Circular Interpolation 331
6-5 Helical Circular Interpolation 332
6-6 Interrupt Feeding 334
6-7 Traverse Function 336
6-8 Operating Modes 337
6-8-1 Stop Mode 338
6-8-2 Pass Mode 339
6-8-3 In-position Check OFF Mode 342
6-9 Changing Parameters 345
6-10 Stopover Function 346
6-11 CPU Unit Interrupt Processing 348
6-12 Override Function 349
6-13 Resetting the Error Counter 351
6-14 Servo Lock and Unlock 353
6-14-1 Timing Charts 354
6-14-2 Related System Parameters 355
6-15 Backlash Correction 356
6-15-1 Setting Backlash Correction 357
6-16 Automatic Loading 359
6-16-1 Executing Automatic Loading 360
6-16-2 Related Bits in the PLC Interface Area 362
6-17 Present Position Preset 363
6-17-1 Executing Present Position Preset 364
6-18 Electronic Gear Function 365
6-18-1 Setting the System Parameters 365
6-18-2 Related Bits 369
6-19 Acceleration and Deceleration Curves 369
6-20 Unlimited Feeding 370
6-20-1 Setting System Parameters 371
6-21 Stopping 372
6-21-1 Changes Made to the Driver Alarm Input Stop Method 373

6-1 Overview

This section describes the operations required for basic positioning with an MC Unit, and explains how to use them. It also explains the functions that have been newly added or changed from those of the earlier C200H-MC221 MC Unit. For explanations of other functions, refer to *3-3 System Parameters*, *5-3 PLC Interface Area*, and *7-2 G Language Overview*.

There are four ways to execute operations, as follows:

- Running a G-language program
- Executing operations with the PLC Interface Area in the CPU Unit
- Executing operations with the Command Area
- Setting system parameters

Notation

The bit status is indicated as follows in the explanations of positioning operations:

↑: A transition in the bit from 0 (OFF) to 1 (ON) (See note.)
↓: A transition in the bit from 1 (ON) to 0 (OFF) (See note.)
1: ON
0: OFF

Note Transitions in bits are determined in the MC Unit and are not always detectable when using the DIFU and DIFD instructions in the program in the CPU Unit.

6-1-1 Summary of Operations

Operation name	Basic function	Mode	Execution method	Page
PTP control	Positions each axis independently	Automatic	G language (G00)	327
Linear interpolation	Performs linear interpolation on 1, 2, 3, or 4 axes (1 or 2 axes for MC221). The specified axes move simultaneously. The feed rate can be specified.	Automatic	G language (G01)	328
Circular interpolation	Positions using two axes, following an arc from the specified starting point to the specified end point.	Automatic	G language (G02/G03)	331
Helical circular interpolation	Adds another axis in parallel to circular interpolation.	Automatic	G language (G02/G03)	332
Interrupt feeding	Feeds along an axis for a fixed distance when an external interrupt is input. Feeding is also possible by specifying a given travel distance even when no interrupt is input.	Automatic	G language (G31)	334
Traverse	Used for winding machine operations.	Automatic	G language (G32)	336
Operating mode	Any of the following modes can be specified for positioning operations: Stop Mode, Pass Mode, or In-position Check OFF Mode.	Automatic	G language (G10, G11, G13), system setup	337
Change parameter	Changes servo system parameters using G language.	Automatic	G language (G69)	345
Stopover	Outputs an M code or D code at a specified position during axis operation.	Automatic	G language (G00, G01)	346
CPU Unit interrupt processing	Executes an interrupt program with the D code (0 to 255) as the interrupt program number.	Automatic	G language (D code output)	348
Override	Changes the speed by applying a specified factor.	Automatic, manual	Bit designation	349

Operation name	Basic function	Mode	Execution method	Page
Error counter reset	Forcibly resets the error counter to zero, and stops axis operation.	Automatic, manual	Bit designation	351
Servo-lock	Creates a position loop at the MC Unit.	Manual	Bit designation	353
Servo-unlock	Releases the position loop at the MC Unit.	Automatic, manual	Bit designation	353
Backlash correction	Compensates for backlash in the mechanical system.	Automatic, manual	Command Area designation, CX-Motion	356
Automatic loading	Downloads G-language programs, position data, and system parameters to the MC Unit from an external memory device connected to a personal computer running CX-Motion.	Automatic, manual	Command Area designation, CX-Motion	359
Present position preset	Presets the present position to any specified value.	Manual	Command Area designation	363
Electronic gear	Sets the per/pulse ratio for an MPG or sync encoder.	Manual	System parameter setting (by IOWR or CX-Motion)	365
Acceleration/deceleration curve	Specifies the acceleration and deceleration method for how each axis is started or stopped.	Automatic, manual	System parameter setting (by CX-Motion only)	369
Unlimited feeding	Specifies control for an axis to be fed continuously, such as for a conveyer, for example.	Automatic, manual	System parameter setting (by CX-Motion only)	370
Stop	Describes how to stop the axis operation.	Automatic, manual	Bit designation, software limit (system parameter), external input (emergency stop, limit input), etc.	372

6-2 PTP Control

Overview

Mode: Automatic; **Method:** G language (G00)

Positioning each axis independently from the other axes is called PTP control. Each axis moves at the preset feed rates: at the acceleration for the preset acceleration time, the maximum feed rate, and the deceleration for the preset deceleration time. For details on using PTP control with the G language, refer to *7-3-1 G00: POSITIONING*.

For example, suppose a control program is executed for moving from the origin to the X-axis coordinate of 100 and Y-axis coordinate of 50. If the feed rates, the acceleration times, and the deceleration times are the same for both axes, X-axis and Y-axis movements will be as illustrated below.

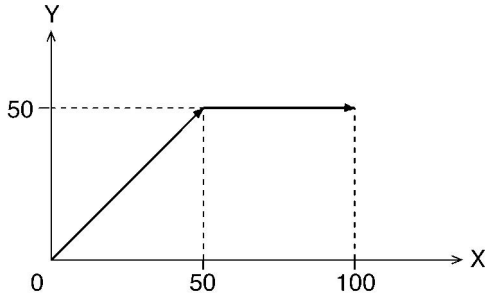

The illustration shows movements when the high-speed feed rate for the X axis is set to the same feed rate as the Y axis.

Both the X axis and Y axis move to a coordinate of 50 over the same duration of time. At this point, the Y axis stops and the X axis moves to a coordinate of 100.

Jogging in the Manual Mode is also performed using PTP control using the maximum jogging feed rate.

Acceleration Time and Deceleration Time

Acceleration and deceleration times under the PTP control are as follows:

Acceleration time: Time required until the single axis speed reaches the maximum feed rate.

Deceleration time: Time required until the speed control voltage drops to zero from the maximum feed rate of the single axis.

The acceleration time and deceleration time (feed rate parameters) are set either from the CX-Motion or by using IOWR in the ladder program.

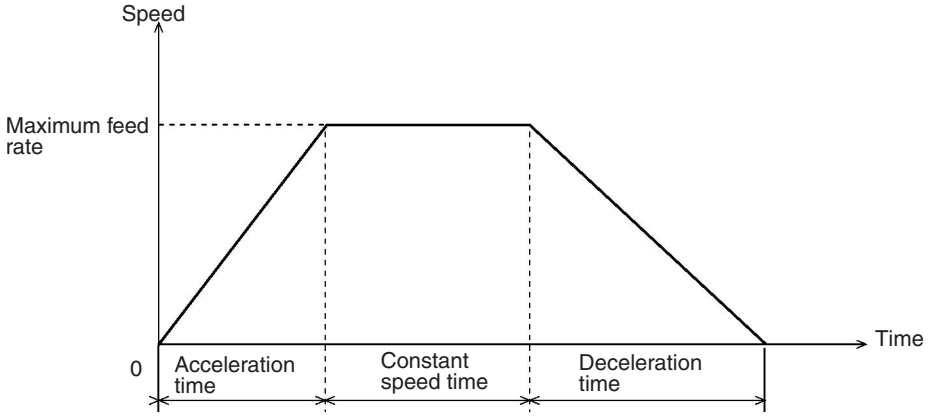

Overrides can be set to alter the acceleration time and deceleration time. The acceleration speed, however, will remain constant.

Note Refer to *6-12 Override Function* for details on the override function.

Triangular Control

If the travel time is shorter than the sum of acceleration time and deceleration time, triangular control will occur as shown below.

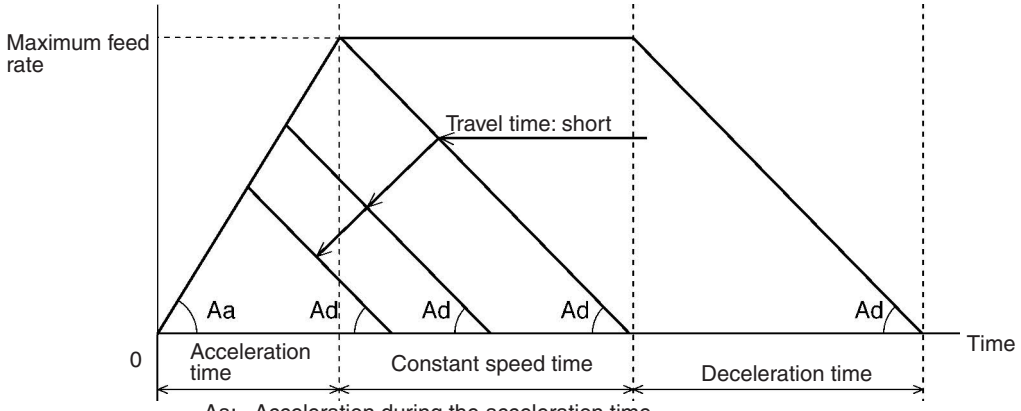

The ratio of acceleration time and deceleration time in the triangular control will be the same as the ratio of acceleration time and deceleration time set in the feed rate parameters.

6-3 Linear Interpolation

Overview

Mode: Automatic; **Method:** G language (G01)

Positioning with linear interpolation produces a straight line that connects a preset starting point to a preset end point using all specified axes (X to U). For details on using linear interpolation with the G language, refer to *7-3-2 G01: LINEAR INTERPOLATION*.

Linear interpolation from the point A to the point B will be as shown below when using the X and Y axes.

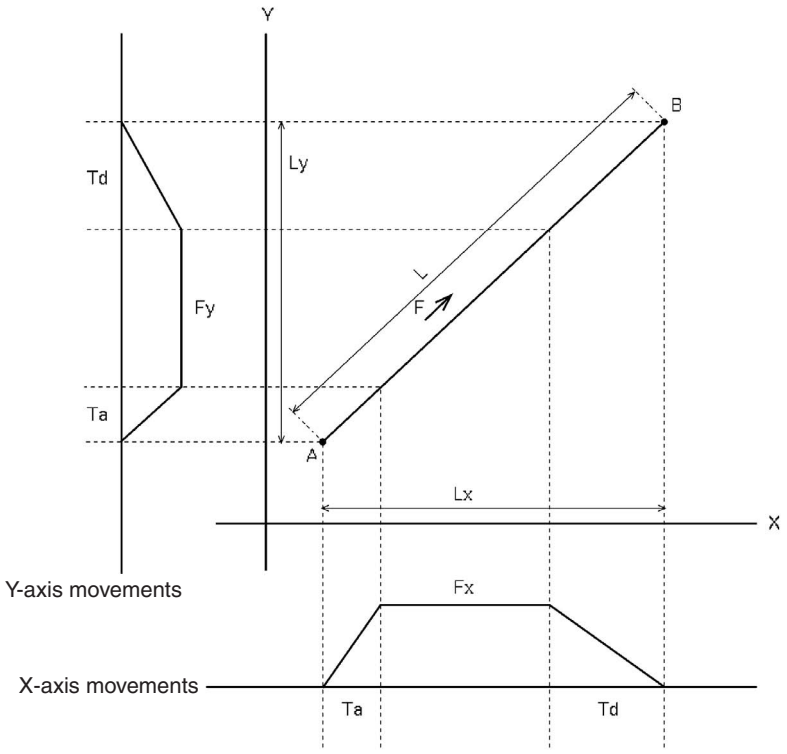

F: Designated interpolation feed rate
Fx: Interpolation feed rate of the X axis based on F
Fy: Interpolation feed rate of the Y axis based on F
Ta: Interpolation acceleration time
Td: Interpolation deceleration time

Fx and Fy can be expressed as follows:
Fx= Lx/L x F
Fy= Ly/L x F
Where, L is the travel distance in the specified locus, Lx is the travel distance along the X axis, and Ly is the travel distance along the Y axis.

Interpolation Acceleration and Deceleration Times

Interpolation acceleration and deceleration times for linear interpolation are defined as follows:

Interpolation acceleration time: Time required to reach the specified interpolation feed rate on the composite axial locus.

Interpolation deceleration time: Time required until the speed control voltage drops to zero from the specified interpolation feed rate on the composite axial locus.

The acceleration time and deceleration time (feed rate parameters) are set either from the CX-Motion or by using IOWR in the ladder program.

Unlike PTP control, linear interpolation acceleration and deceleration times are not affected by the speed. Acceleration changes according to the movement to satisfy the preset interpolation acceleration and deceleration times.

Constant Acceleration Mode

When positioning is executed using linear interpolation, the normal operation (i.e., the CX-Motion default setting) is for positioning to accelerate at the interpolation acceleration time until the specified interpolation feed rate is reached, and for positioning to decelerate at the interpolation deceleration time. Unlike

PTP control, the acceleration or deceleration time is not shortened according to the speed (except for triangular control).

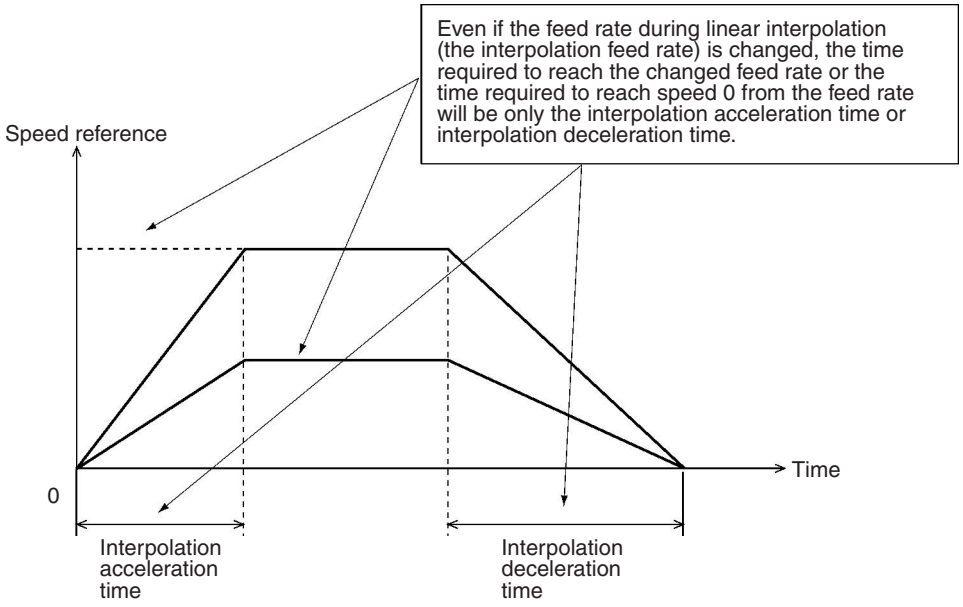

The Constant Acceleration Mode is provided to shorten the positioning time when only one axis is used for linear interpolation. This mode is normally set to OFF (i.e., it is turned OFF in the CX-Motion default settings). When it is turned ON (enabled), positioning will be executed at acceleration and deceleration times according to the interpolation feed rate, as shown in the following diagram. When linear interpolation is executed for two or more axes, positioning will accelerate and decelerate at the interpolation acceleration and deceleration times (as shown in the above diagram) regardless of the interpolation feed rate and even if the Constant Acceleration Mode is turned ON (enabled).

In the following diagram, linear interpolation is executed for one axis only with the Constant Acceleration Mode turned ON.

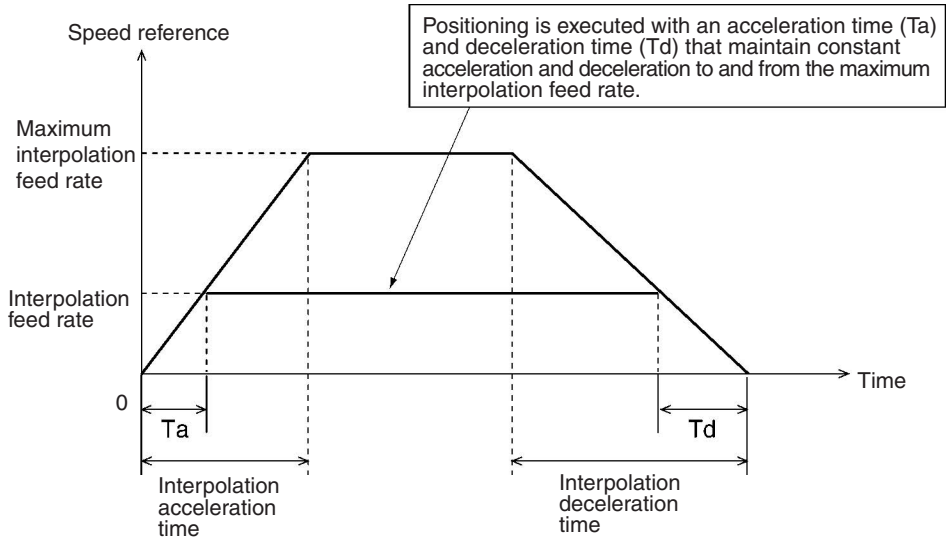

Acceleration time Ta = Specified interpolation feed rate x interpolation acceleration time / maximum interpolation feed rate

Deceleration time Td = Specified interpolation feed rate x interpolation deceleration time / maximum interpolation feed rate

Note

1. The interpolation acceleration time and the interpolation deceleration time use the acceleration and deceleration times set in the system parameters or the times that are changed in the G-language program. (The times can be changed by G69.)
2. The maximum interpolation feed rate uses the value set in the system parameters.

Triangular Control

When the mode is set to the Stop Mode and if the travel time is shorter than the sum of the interpolation acceleration time and the deceleration time, triangular control will be performed, just as it is for PTP control.

When the mode is set to the Pass Mode, the travel time will not become shorter than the preset interpolation acceleration and deceleration times, but the speed will become slower than the designated feed rate.

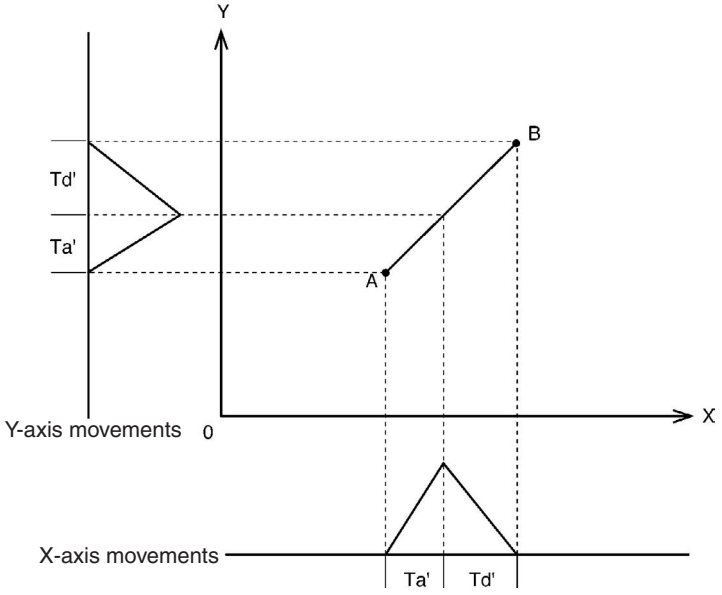

The ratio between the interpolation acceleration time and the deceleration time for triangular control is equal to the ratio between the preset interpolation acceleration time (Ta) and the deceleration time (Td). Td'/Ta'=Td/Ta

6-4 Circular Interpolation

Overview

Mode: Automatic; **Method:** G language (G02, G03)

Positioning for circular interpolation is performed using two axes from a starting point to an ending point and traveling through a circular arc. For details on using circular interpolation with the G language, refer to *7-3-3 G02 and G03: CIRCULAR INTERPOLATION*.

Basic Concept

Circular interpolation is achieved by repeating successive linear interpolation along straight lines drawn by dividing a circular arc (in the shape of a polygon). The actual locus of circular interpolation is as shown below. The radius

of the locus of actual movements is smaller than the radius of the arc due to accumulated pulses.

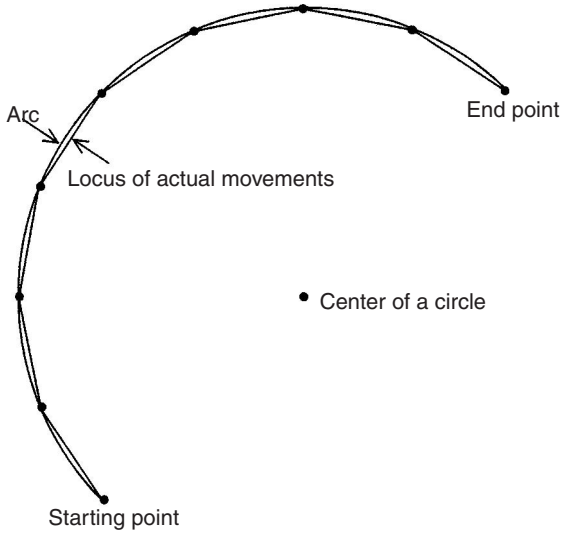

The interpolation acceleration time, the interpolation deceleration time, and triangular control are the same as for linear interpolation.

Refer to *6-3 Linear Interpolation* for details on interpolation acceleration time, interpolation deceleration time, and triangular control.

Note If positioning for circular interpolation is performed at high speed, the radius of the locus of actual movements will be reduced. This can also be improved by setting feed forward gain in the servo system. For details, refer to *6-9 Changing Parameters*.

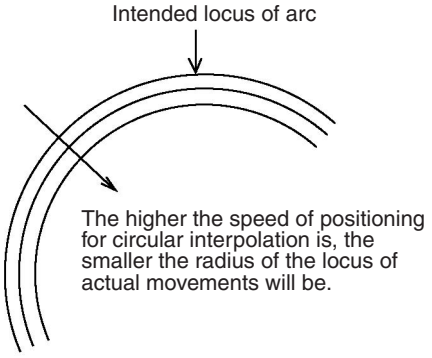

6-5 Helical Circular Interpolation

Overview

Mode: Automatic; **Method:** G language (G02, G03)

Helical circular interpolation adds another axis to circular interpolation. It cannot be used with CS1W-MC221 MC Units. For details on using helical circular interpolation with the G language, refer to *7-3-3 G02 and G03: CIRCULAR INTERPOLATION*.

With earlier MC Unit models, helical circular interpolation was limited to a single turn, but the CS1W-MC421's multiturn capability makes helical operations easier.

Basic Concept

Similar to circular interpolation, helical circular interpolation performs control operations by dividing a 3-dimensional circular arc in the shape of a polygon.

The helical circular interpolation locus is as shown below for circular interpolation executed for the X and Y axes and the Z axis added as a supplemental axis.

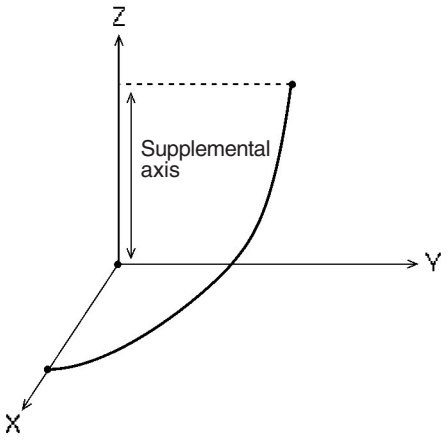

The Z-axis feed rate is obtained by the following equation:

Feed rate = (Specified interpolation feed rate x Z-axis length)/(Arc length)

The interpolation acceleration time, the interpolation deceleration time, and triangular control are the same as for linear interpolation.

With helical circular interpolation, the travel time is calculated giving priority to the feed rate along the arc. For that reason, the feed rate of the supplemental axis may exceed the maximum interpolation feed rate set in the system parameters. If this occurs, a SUP AXIS SP OVER (supplemental axis speed overflow) error will be generated and operation will be stopped. Lower the feed rate if this error occurs.

Helical Operation

```
N010  G90 ..... Absolute specification
N011  G17 ..... XY circular plane specification
N012  G02   X100 Y200   Z20   I0   J0   F200  L4
```

Number of turns (4 in this case)

Feed pitch for one turn in Z-axis direction

Stop position for 5th turn

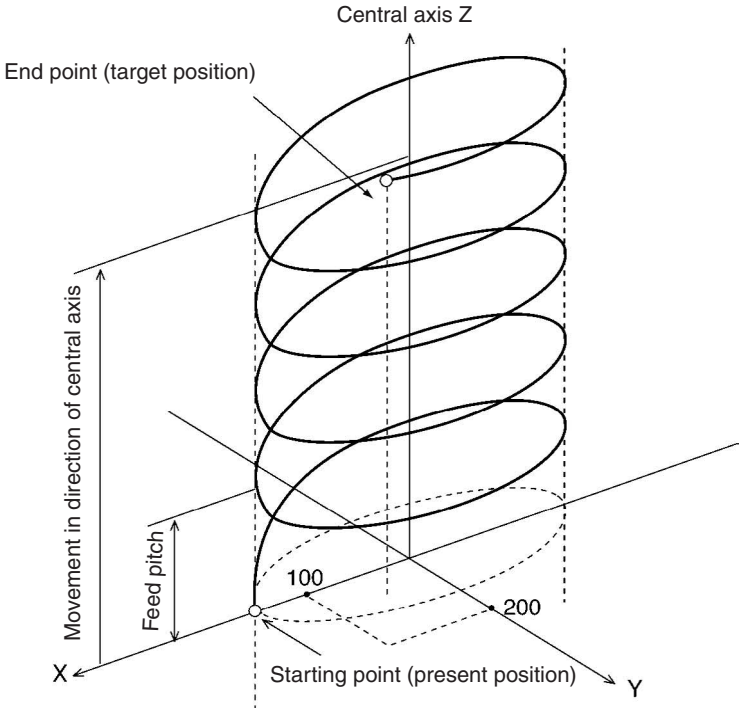

6-6 Interrupt Feeding

Overview

Mode: Automatic; **Method:** G language (G31)

Interrupt feeding is a control operation that feeds an axis for a fixed distance, using speed control until an external signal is input and then switching to position control at that point.

Interrupt feeding can be performed either at constant speed or two-stage speed.

For details on using interrupt feeding with the G language, refer to *7-3-14 G31: INTERRUPT FEEDING*.

It is also possible to specify a travel distance at which to stop when there is no interrupt input. Operation will normally stop with an error (program execution interrupted) after positioning, but an S option can be used to execute the next block without an error occurring.

Constant Speed

In this example, only speed reference 1 is specified. The X axis is moved by 100 mm at 200 mm/s (speed reference 1) with speed control.

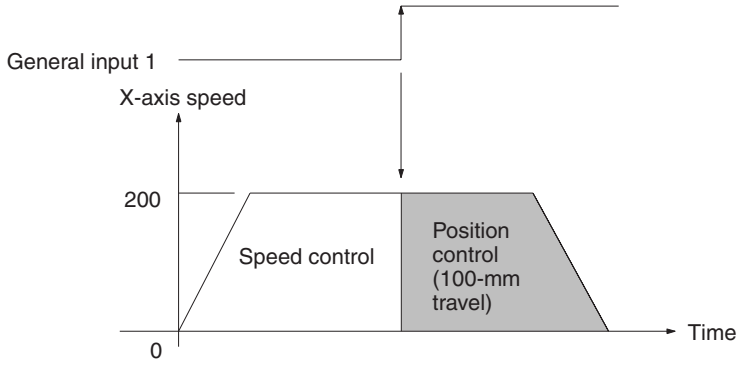

Two-stage Speed

In this example, speed reference 2 is specified. The X axis is moved by 100 mm while the speed of the X axis is decelerated to 100 mm/s from 200 mm/s.

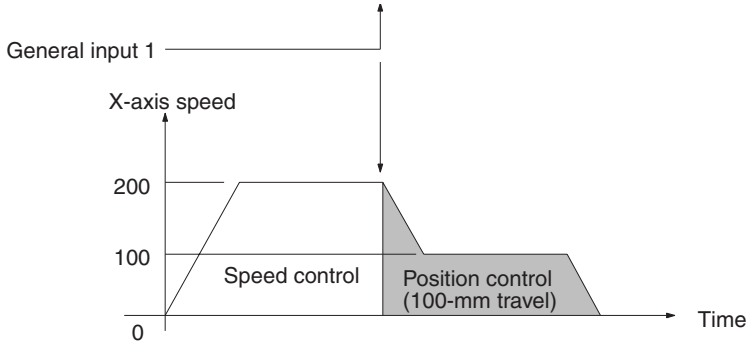

Specifying an Amount of Travel for When No Interrupt Is Input

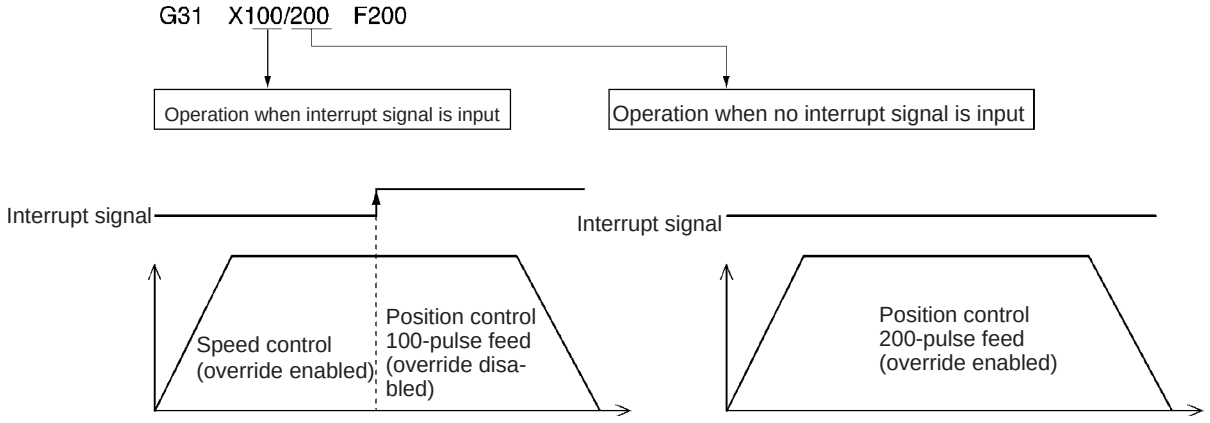

If no interrupt signal is received, operation will stop with an error (program execution interrupted) after positioning. If the S option is specified, however, the next block will be executed without an error occurring.

Example: G31 x 100/200 F200 S

Note 1. Interrupt feeding can be used to move only one axis.

2. An external signal for interrupt feeding can be input via general inputs1 to 4 of the MC Unit.

Input number	MC221	MC421
General input 1	For X-axis interrupt feeding	For X-axis interrupt feeding
General input 2	For Y-axis interrupt feeding	For Y-axis interrupt feeding
General input 3	---	For Z-axis interrupt feeding
General input 4	---	For U-axis interrupt feeding

6-7 Traverse Function

Overview

Mode: Automatic; **Method:** G language (G32)

The traverse function is a special G-language command (G32) that is provided for winding machine operations. For details on using the traverse command with the G language, refer to *7-3-15 G32: TRAVERSE*.

G Code Specifications

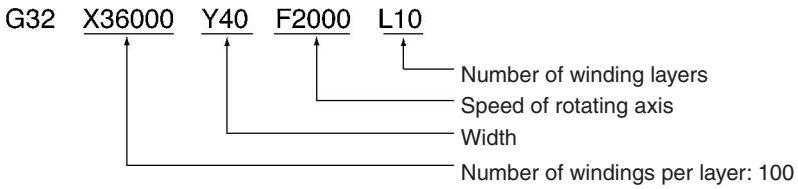

The setting for 100 windings per layer is 36000 because one winding is equivalent to 360°.

Example Application

In this example, the wire is wound around a spool on a winding machine. The spool is turned in a fixed direction and the traverse axis is operated according to the settings for the traverse function.

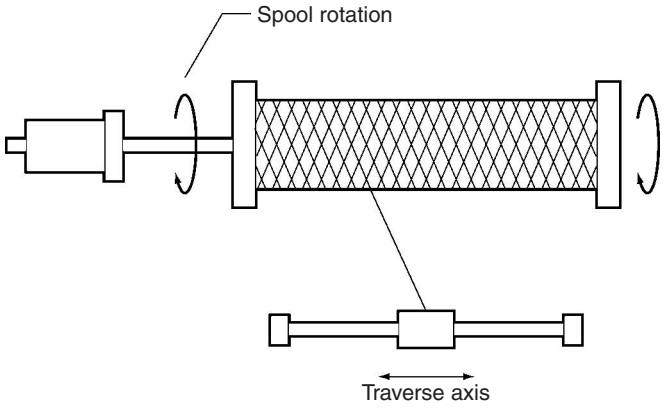

Speeds for Each Axis during Traverse Operation

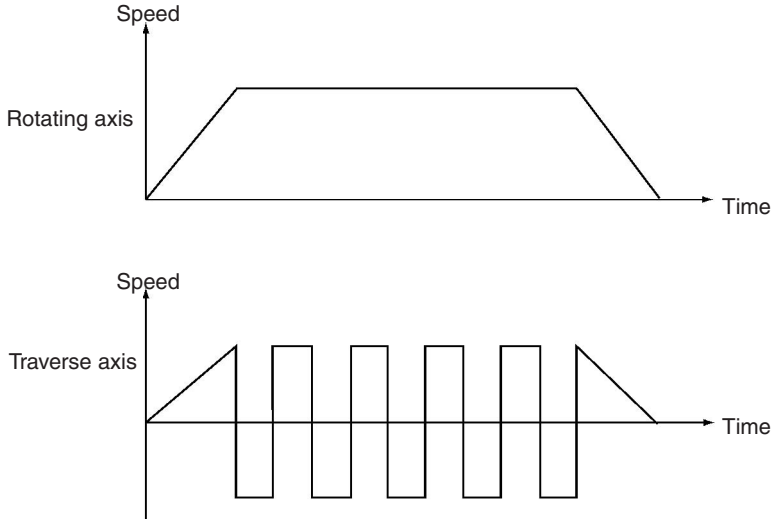

6-8 Operating Modes

Overview

Mode: Automatic; **Method:** G language (G10, G11, G13), system parameters

There are three operating modes for positioning: Stop Mode (G11), Pass Mode (G10), and In-position Check OFF Mode (G13). For details on how to set the mode, refer to the explanations in *SECTION 7 G-language Programming*.

Operating mode	Function
Stop Mode	When continuous operations are specified, the Stop Mode determines when positioning has been completed and then starts the next operation.
Pass Mode	When continuous operations are specified, the Pass Mode proceeds smoothly to the next operation without determining whether the present positioning has been completed.
In-position Check OFF Mode	When positioning is executed, the In-position Check OFF Mode starts the next operation without determining whether positioning has been completed. This is the only difference between this mode and the Stop Mode.

The operating mode can be changed by the operations and G codes shown in the following table. Once the operating mode has been changed, the new mode will remain in effect until it is again changed by one of these methods.

Methods for Changing the Operating Mode

Name	G code	Operating mode
Power supply reset or restarting the MC Unit as a Special I/O Unit	None	Pass Mode
Executing the main program from the beginning	None	Pass Mode
ORIGIN SEARCH	G28	Pass Mode
REFERENCE ORIGIN RETURN	G26	Pass Mode
WORKPIECE ORIGIN RETURN	G27	Pass Mode
PASS MODE	G10	Pass Mode
STOP MODE	G11	Stop Mode
IN-POSITION CHECK OFF MODE	G13	In-position Check OFF Mode

Among those G codes that execute positioning actions, there are some for which any of the three operating modes can be selected and some for which positioning is always executed in Stop Mode. These G code operations are shown in the following table.

G code	Name	Operating mode		
		Stop Mode	Pass Mode	In-position Check OFF Mode
G00	POSITIONING	●	---	---
G01	LINEAR INTERPOLATION	●	●	●
G02	CIRCULAR INTERPOLATION (CLOCKWISE)	●	●	●
G03	CIRCULAR INTERPOLATION (COUNTERCLOCKWISE)	●	●	●
G26	REFERENCE ORIGIN RETURN	●	---	---
G27	WORKPIECE ORIGIN RETURN	●	---	---
G28	ORIGIN SEARCH	●	---	---
G30	SPEED CONTROL	●	---	---
G31	INTERRUPT INCHING	●	---	---
G32	TRAVERSE	●	●	●

●: Modes that can be specified.
---: Positioning is always executed in Stop Mode regardless of which operating mode is specified.

6-8-1 Stop Mode

If the Stop Mode is specified for continuous positioning operations, one operation is followed by the subsequent operation after the first positioning operation has been completed.

The following illustration shows changes in the time, speed, and pulses when the axis is controlled as shown below.

Example:

```
N010 G00 X100      Moves X axis to 100-mm point by PTP control
N011 G00 X200      Moves X axis to 200-mm point by PTP control
```

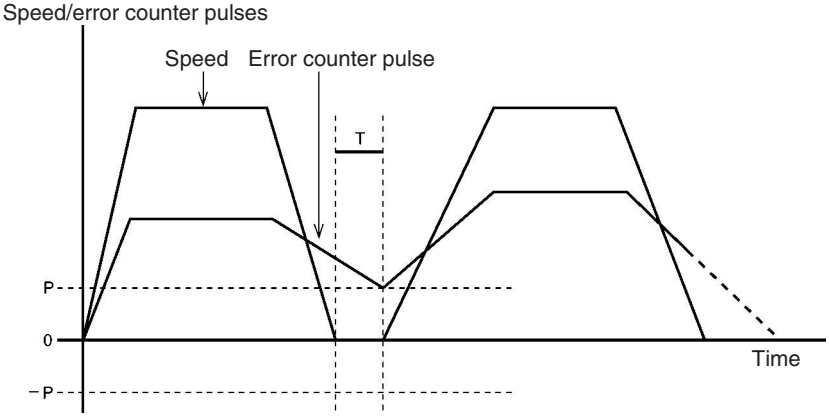

P: In-position width
T: Time required for determining whether positioning is completed or not

Positioning is completed when the error counter pulse falls within the in-position zone. By using the In-position Check OFF function, it is also possible to start the next operation without waiting for positioning to be completed. In this

case, the operation is executed within 4 ms. For details on the In-position Check OFF function, refer to *6-8-3 In-position Check OFF Mode*.

6-8-2 Pass Mode

If the Pass Mode is specified for continuous positioning operations, one operation is followed by the subsequent operation without any pause in motion, i.e., without stopping to determine whether positioning is completed or not. When the power is turned ON, this mode is automatically selected.

The following illustrations show changes in the speed in the Stop Mode and the Pass Mode when the continuous operation commands are given as shown below.

The Pass Time Mode Selection in the Unit parameters can be used to select, when Pass Mode is used, whether positioning will move to the next operation in the interpolation acceleration time or the interpolation deceleration time of the immediately preceding operation. Only in case of linear interpolation for one axis, acceleration during acceleration or pass operation may be set to a constant speed by selecting the Constant Acceleration Mode.

When the Constant Acceleration Mode is enabled, this mode will be given priority for single-axis pass operations regardless of the setting for the Pass Time Mode Selection.

The settings for the Pass Time Mode Selection and the Constant Acceleration Mode are made using CX-Motion. The contents of these settings can only be read from the ladder program using the IORD instruction. For details, refer to *3-3-4 Data Configuration for System Parameters*.

Example:

```
N010 G01 X100 F10
```
Moves X axis to 100-mm point at 10 mm/s via linear interpolation

```
N011 G01 X300 F20
```
Moves X axis to 300-mm point at 20 mm/s via linear interpolation

⋮

In Stop Mode

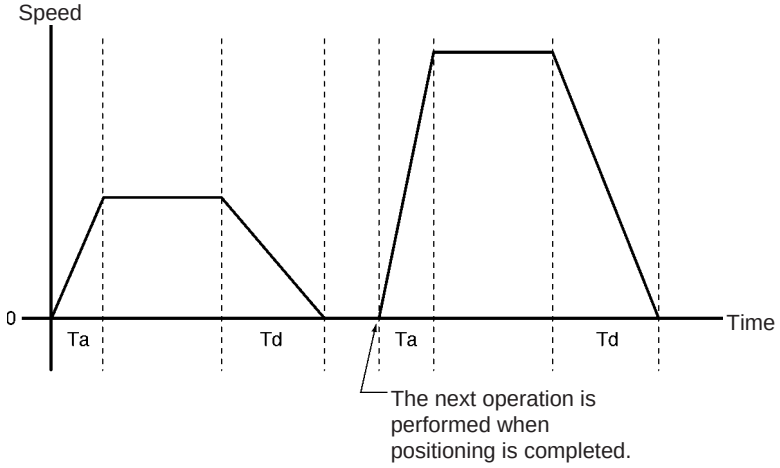

In Pass Mode with Acceleration Time

In this example, the Pass Time Mode Selection is set for interpolation acceleration time. Positioning moves to the next operation in the interpolation acceleration time of the immediately preceding operation.

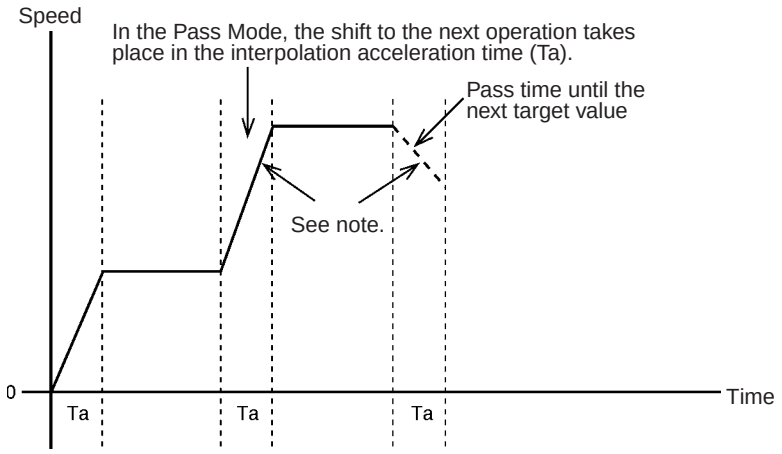

Ta: Interpolation acceleration time

Note The acceleration/deceleration curve, including that for arc interpolation, will be trapezoidal even if an S-curve is specified.

When the Pass Mode is specified as the operating mode, the time required for movements is reduced because there is no need to determine whether positioning has been completed.

In Pass Mode with Deceleration Time

In this example, the Pass Time Mode Selection is set for interpolation deceleration time. Positioning moves to the next operation in the interpolation deceleration time of the immediately preceding operation.

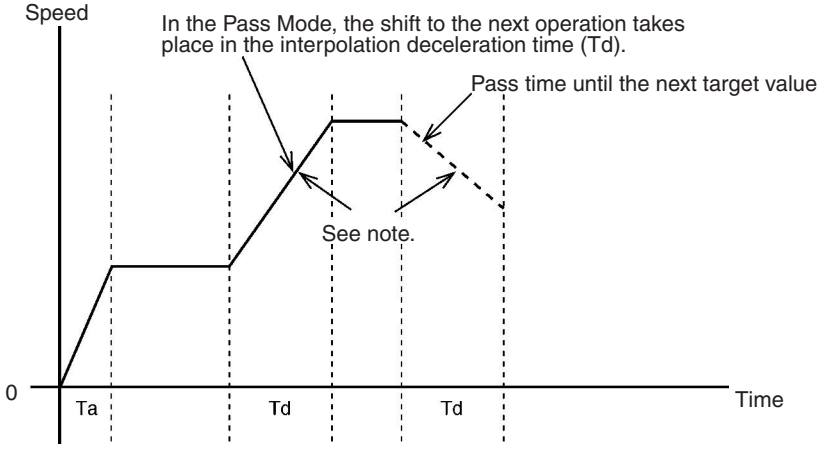

Ta: Interpolation acceleration time
Td: Interpolation deceleration time

Note The acceleration/deceleration curve, including that for arc interpolation, will be trapezoidal even if an S-curve is specified.

When the Pass Mode is selected, the time required for movements is reduced because there is no need to determine whether positioning has been completed.

In Constant Acceleration Mode

The Constant Acceleration Mode is enabled when linear interpolation is executed for one axis only. To use this mode, turn ON the Constant Acceleration Mode setting in the Unit parameters.

If a pass operation is executed in the Constant Acceleration Mode, the acceleration and deceleration times will always be constant as shown in the following diagram.

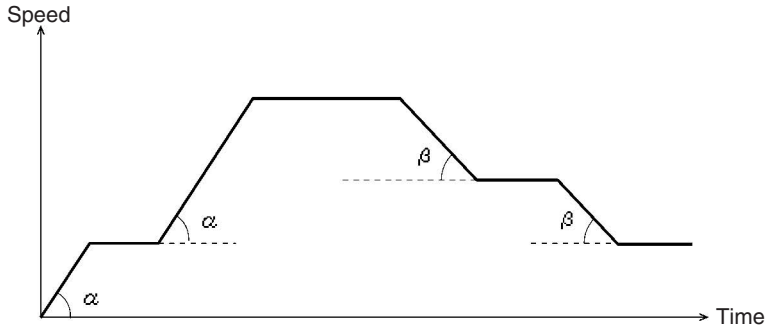

Acceleration α = Max. interpolation feed rate / interpolation acceleration time
Deceleration β = Max. interpolation feed rate / interpolation deceleration time

Note

1. The interpolation acceleration time and the interpolation deceleration time use the acceleration and deceleration times set in the system parameters or the times that are changed in the G-language program. (The times can be changed by G69.)
2. The acceleration and deceleration times when pass operations are executed increase or decrease according to the amount of change in the interpolation feed rate. The times can be determined by the following equations:

   Acceleration time = Change in interpolation feed rate x Interpolation acceleration time / Maximum interpolation feed rate

   Deceleration time = Change in interpolation feed rate x Interpolation deceleration time / Maximum interpolation feed rate

Block Ends in Pass Mode

In Pass Mode, the ends of G-language blocks are treated as shown below.

When Constant Acceleration Mode Is OFF

Pass operations are executed as shown in the following diagram when the Constant Acceleration Mode is OFF.

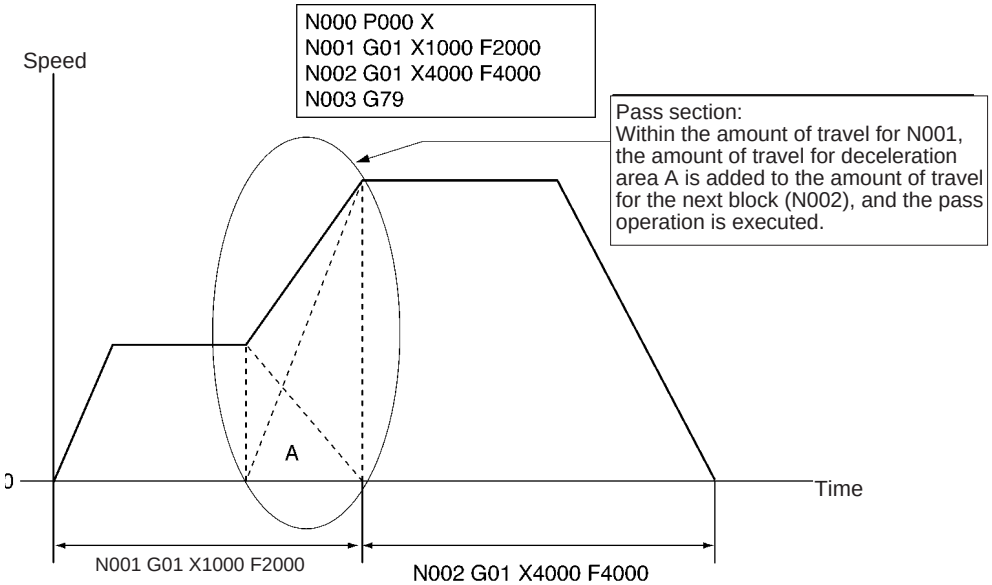

Note: Moves to the next block a little before the specified position.

When Constant Acceleration Mode Is ON

Linear interpolation pass operations are executed as shown in the following diagram when the Constant Acceleration Mode is ON. The next block is executed after the demand position is created.

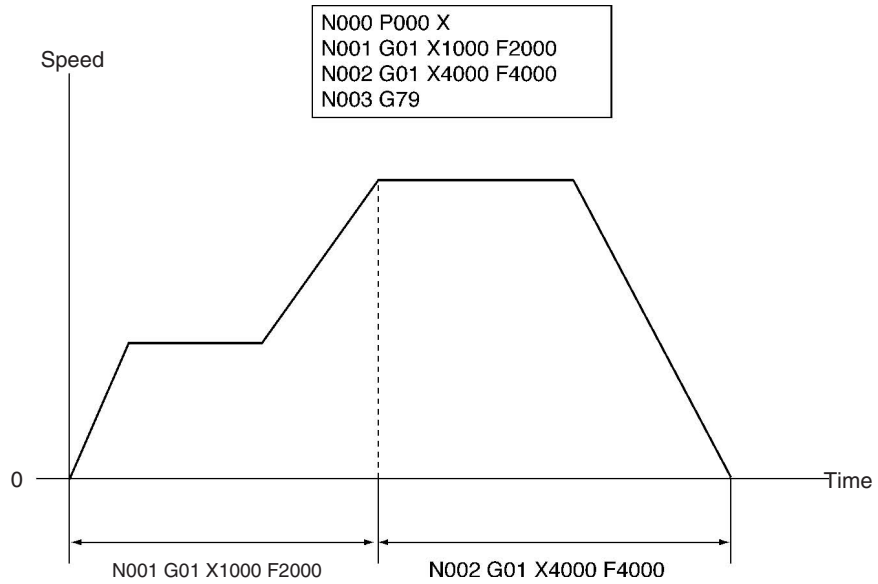

Note: Execution of the next block is started as soon as the demand position has been created.

6-8-3 In-position Check OFF Mode

By specifying the G13 code (IN-POSITION CHECK OFF MODE), the next positioning operation can be started without waiting for the present one to be completed. This allows high-speed pick-and-place operations to be performed.

This function contrasts with the Stop Mode, in which the next positioning operation is not started until the present one has been completed.

To have positioning wait until the present operation is completed before the next one is started, execute G11 (STOP MODE). For details, refer to *7-3-7 G13: IN-POSITION CHECK OFF MODE*.

When In-position Check OFF Mode Is Enabled

```
N010  G13                    In-position Check OFF statement
N020  G01  X200  F200
N030  G01  X400  F200
```

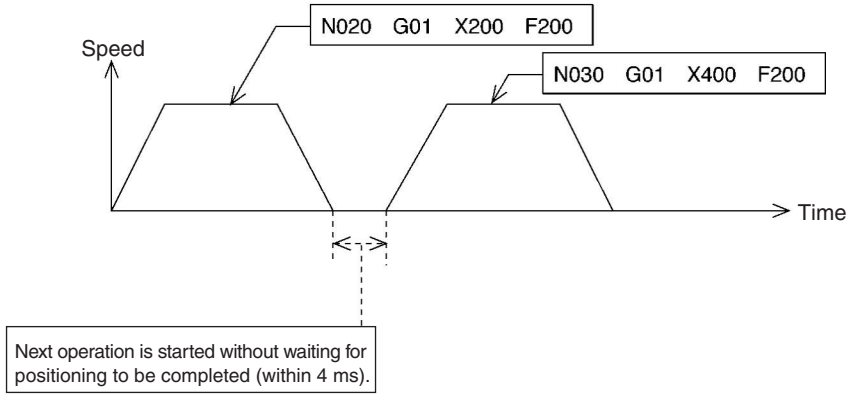

Constant Acceleration Mode Limitations

The Constant Acceleration Mode can be used only for single-axis linear interpolation. When two or more axes are operated following a linear interpolation operation in the Constant Acceleration Mode, the next operation will be executed after positioning has been completed regardless of the operating mode setting.

The following diagrams provide four examples of operations in the Constant Acceleration Mode.

Example 1: Operation with One Axis Only

```
G01 X100 F200
G01 X200 F400
```

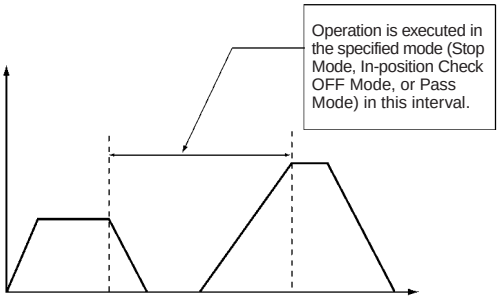

Example 2: Pass Operation with One Axis Only

```
N0000 P000 XY
N001 G91
N002 G01 X100 F200
N003 G01 Y0 F400F400
```

Pass operation is executed and the Y axis is not operated even if it is specified. (In this case the amount of relative movement is 0.)

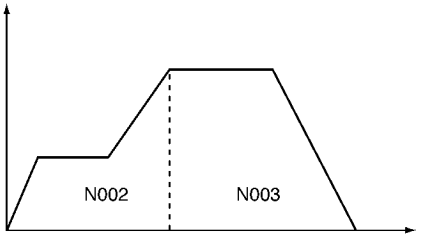

Example 3: Operating from One Axis to Two Axes

```
N000 P000 XY
N001 G01 X100 F200
N002 G01 X200 Y300 X500 F300
```

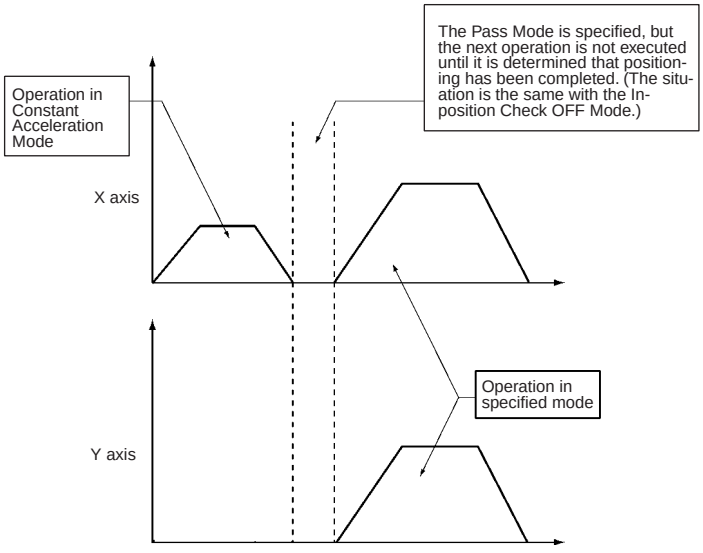

Example 4: Operating from One Axis to Two Axes

```
N000 P000 XY
N001 G01 X100 Y100 F200
N002 G01 X300 F300
```

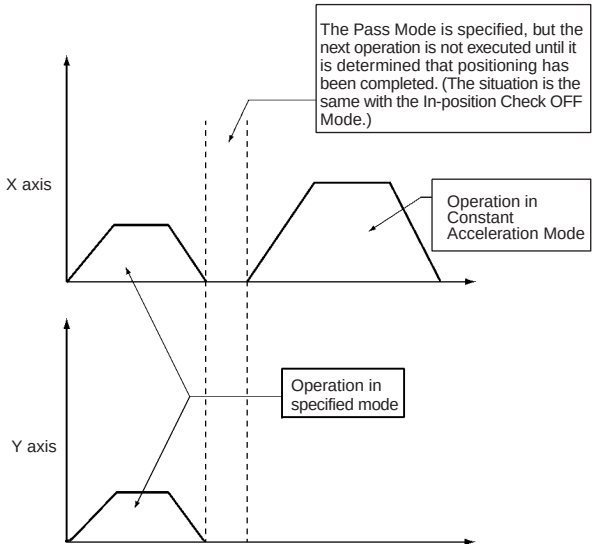

Pass Mode Limitations with Linear Interpolation, Circular Interpolation, and Traverse Operations

Linear interpolation, circular interpolation, and traverse operations are interpolation commands that can be specified for three operating modes. When these interpolation commands are continuously executed in Pass Mode, there are cases where pass operations cannot be performed (depending on the combination of the immediately preceding operation and the present operation). These cases are shown in the following table.

The preceding and present operations for the table shown below are as follows:

Preceding operation: N010 G01 X1000 Y100 F200
Present operation: N020 G01 Y2000 Y-100 F300

Pass: Indicates normal Pass Mode operations. Positioning is executed with pass operations from the preceding operation to the present operation.

Stop: Indicates normal Stop Mode operations. The present operation is executed after the positioning is completed for the preceding operation.

Preceding operation	Present operation				
	Linear interpolation	Circular interpolation		Traverse	
		Same plane	Different planes	Same axis	Different axes[1]
Linear interpolation	Pass	Pass	Pass	Pass	Pass
Circular interpolation	Pass	Pass	Stop[2]	Stop[3]	Stop[3]
Traverse	Pass	Stop[3]	Stop[3]	Stop or Pass[4]	Stop[5]

Note

1. “Different axes” indicates that the axes that are operated are changed, as when four axes are used for one task and linear interpolation is executed for the X and Y axes followed by traverse operation for the Z and U axes.
2. This indicates cases such as executing ZU-plane circular interpolation after XY-plane circular interpolation.
3. This indicates cases such as executing traverse operations after circular interpolation, or circular interpolation after traverse operations.
4. The operating mode for the traverse operation will differ according to the following circumstances.

   If the rotating axes are operated in opposite directions, the preceding traverse operation will be performed in Stop Mode.

   If the rotating axes are operated in the same direction, positioning will be executed in Pass Mode.
5. When four axes are used for one task, the traverse operation is executed first for the X and Y axes and then for the Z and U axes.

Other Limitations

In Pass Mode and In-position Check OFF Mode, the G-language program is read in advance. In addition, the pre-reading stops in the following situations, so the operations are always executed as if in Stop Mode, regardless of the actual operating mode.

Commands where operation stops following command	Commands where previous interpolation operation stops (G01, G02, G03, G32)
G01, G02, G03, including M000 to M499	G00 (PTP)
	G01, G02, G03, including # option number specification
	G04 (DWELL TIMER)
	G29 (ORIGIN UNDEFINED)
	G30 (SPEED CONTROL)
	G31 (INTERRUPT FEEDING)
	G54 (CHANGE REFERENCE COORDINATE SYSTEM PV)
	G79 (PROGRAM END)
	Independent commands M000 to M999
	Independent commands D000 to D255

6-9 Changing Parameters

Overview

Mode: Automatic; **Method:** G language (G69)

The servo system gain can be changed by using CHANGE PARAMETER (G69). This function can be used, for example, to increase the accuracy of circular interpolation when position loop feed forward gain is enabled during circular interpolation. For details, refer to *7-3-22 G69: CHANGE PARAMETER*.

The following parameters can be changed using this function:

Changeable Servo Parameters

#5 Position loop gain
#6 Position loop feed forward gain
#7 In-position
#8 Accumulated pulse warning value

Changeable Feed Rate Parameters

#1 Acceleration time
#2 Deceleration time
#3 Interpolation acceleration time
#4 Interpolation deceleration time

The changed servo parameters and feed rate parameters go into effect immediately after G69 is executed.

```
N010  G01  X0  Y100  F100
N020  G69  #6/X50 ..... Sets the position loop feed forward gain to 50%.
N030  G02  X100  Y100  I50  J0  F200
N040  G02  X200  Y100  I50  J0  F300   Increases locus accuracy by enabling position loop feed forward
                                       gain when circular interpolation is executed.
N050  G69  #5/X0 ..... Returns the position loop feed forward gain to 0%.
N060  G01  X–100  Y–200  F100
```

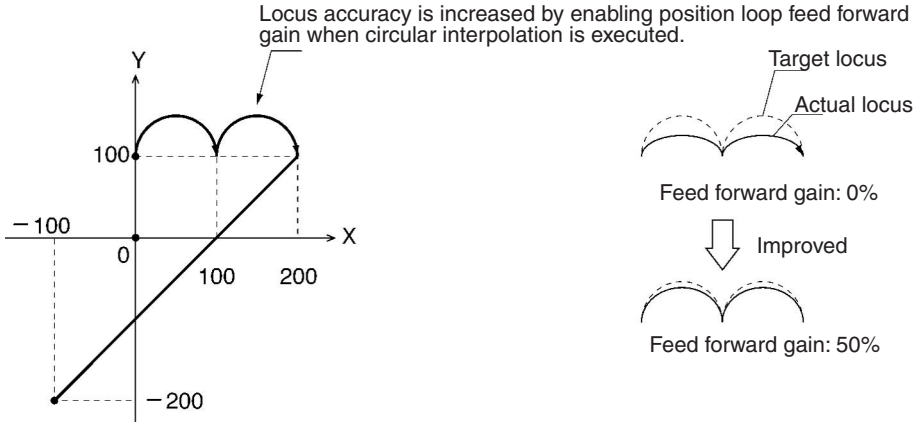

6-10 Stopover Function

Overview

Mode: Automatic; **Method:** G language (G00, G01, etc.)

The stopover function outputs an M code or D code, without stopping axis operation, when the axis has travelled for a specified distance (determined by encoder feedback present position). Before the operation is completed, tact time can be improved by using this function to control peripheral devices.

This function can be applied to G codes for all operations. Either D codes or M codes can be used, but not both.

Monitoring for the stopover function is performed in the command direction when movement is started. Specify the stopover function only for a moving axis. If a version-1 Unit is used, an M code out of range error (0025) will occur if the travel amount is 0.

Case 1: N010 G01 X100 F200 D100/X50
In this case, D code 100 is output when the X axis is moved by 50 mm in the direction of the specified position.

Case 2: N010 G01 X200 F200 M600/X100
In this case, M code 600 is output when the X axis is moved by 100 mm in the direction of the specified position.

Case 3: N010 G01 X100 F200 M700 D30
In this case, D30 and M700 are output when block N010 is completed (i.e., when the X axis is moved by 200 mm).

Wrong: N010 G01 X100 F200 M800 D100/X50
If the stopover function is used in this way, an error will be generated by CX-Motion.

Operation Example

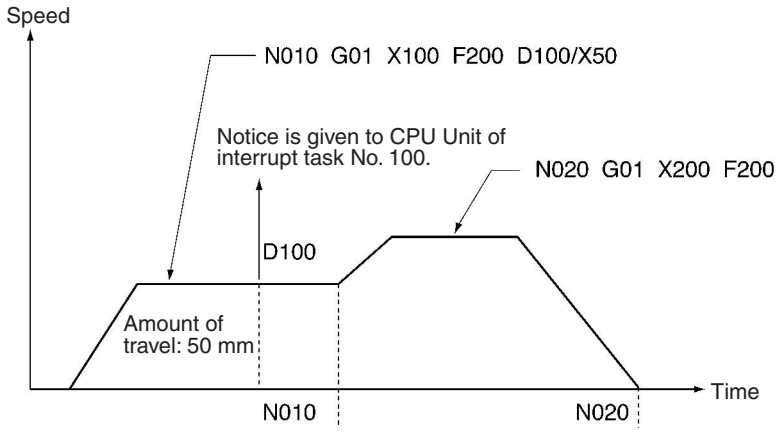

After the D code or M code, place a "/" followed by the axis name and the amount of travel.

Axis name: Specify X, Y, Z, or U.

Amount of travel: Specify the amount of travel, without sign, in the direction of the demand position (determined by the present position). The amount of travel can be written as follows:

- Number (0 to 39,999,999)
- A0000 to A1999
- (E00) to (E31)

Exceptional operation will occur for the stopover function in the following cases.

- The M code/D code will not be output if the stopover is added to the operation before reversing operation and the specified position is not reached.
- The M code/D code will be output at the beginning of the overlapping section if the stopover is added in the operation after reversing operation and a position in the overlapping area is specified.
- The M code/D code will be output in the middle of the overlapping section if the stopover function is specified for the added axis in the next operation of the Pass operation of helical circular interpolation.

Example for Reversing Operation

N001 G54 X0 Y0
N002 G01 X100 Y100
N003 G01 X0 Y200 M123/X10

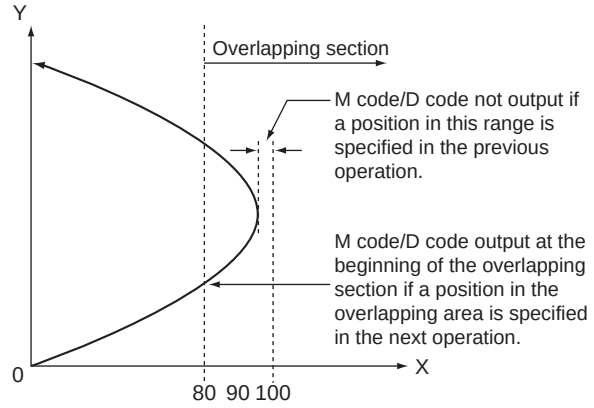

Example for Helical Circular Interpolation

N010 G90
N011 G17
N012 G02 X100 Y200 Z20 I0 J0 F200 L4
N013 G02 X100 Y200 Z20 I0 J0 F500 L4 M600/Z10

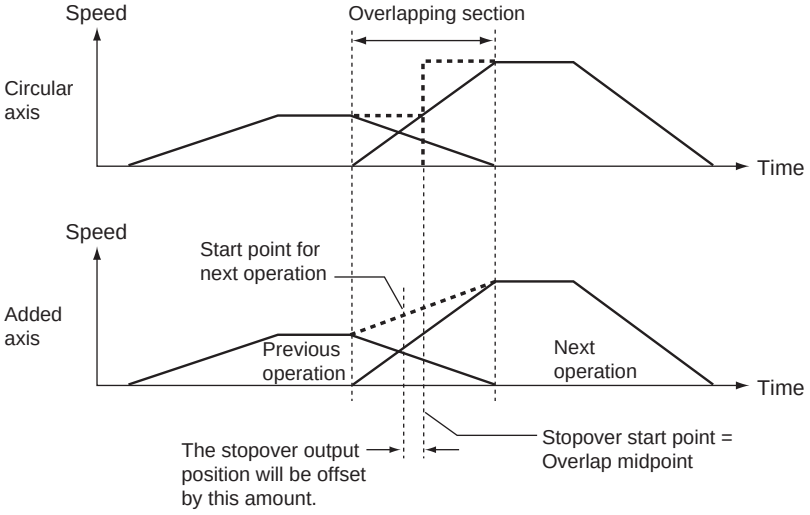

6-11 CPU Unit Interrupt Processing

Overview

Mode: Automatic; **Method:** G language (D code output)

It is possible to set a D code in the G-language program related to positioning as an interrupt to the CPU Unit. The specified D code is output after positioning is completed, and the CPU Unit executes an interrupt task taking the D code (0 to 255) as the task number.

When the stopover function is used, this D code can be output during operation without stopping the operation. For details on the stopover function, refer to *6-10 Stopover Function*.

Note This interrupt function can be used only when the MC Unit is mounted to the CPU Backplane. It cannot be used if the MC Unit is mounted to an Expansion I/O Rack.

When an interrupt task is used in the CPU Unit, a setting must be made in the PLC Setup. For details, refer to the manual for the CPU Unit.

Case 1: N010 D100
Case 2: N010 G01 X100 F200 D100
Case 3: N010 G01 X100 F100 M001 D100

Case 3 Operation

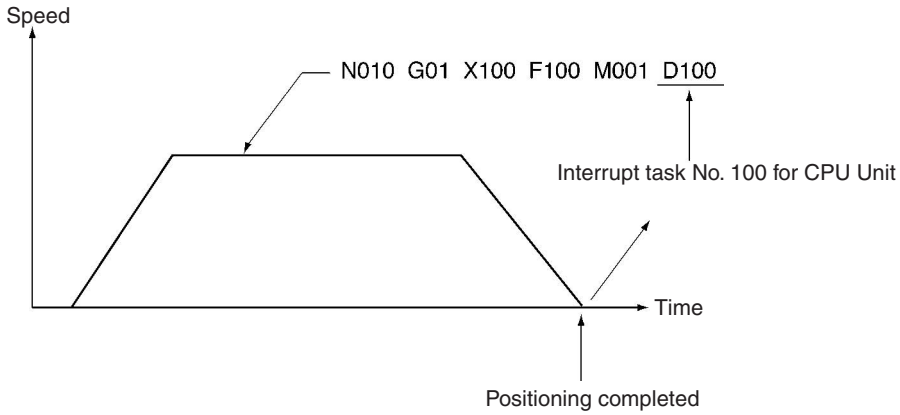

6-12 Override Function

Overview

Mode: Automatic or Manual; **Method:** Bit designation

The override function is designed to change the operation speed by multiplying the speed that is set in the system parameters or G commands by a specified factor. Setting methods are different depending on whether the PTP control is used or interpolation is used.

The override function can be used for the following G codes:

G00: PTP CONTROL POSITIONING
G01: LINEAR INTERPOLATION
G02/G03: CIRCULAR INTERPOLATION
G26: REFERENCE ORIGIN RETURN
G27: WORKPIECE ORIGIN RETURN
G28: ORIGIN SEARCH (but only for movement for an origin offset)
G30: SPEED CONTROL
G31: INTERRUPT FEEDING
G32: TRAVERSE

The following functions can be used in Manual Mode:
Jog feeding
Manual origin return

Override in PTP Control

The override in the PTP control can be set to a value between 0.1% and 100.0%. “100%” means the maximum feed rate designated by the feed rate parameter. The override function is used when the maximum feed rate is too

fast. For example, if the override is set to 50%, the travel speed drops to half the maximum feed rate.

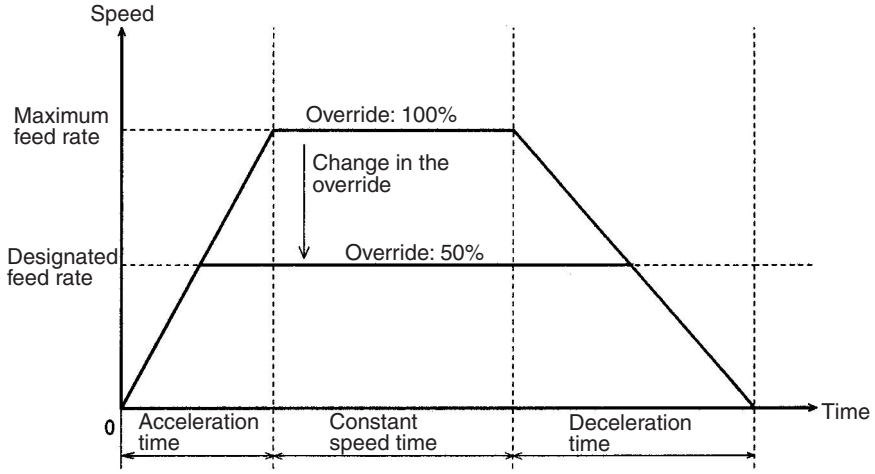

The acceleration remains constant even if the speed is changed by using the override function. As a result, both the acceleration time and the deceleration time are proportionally reduced.

Override in CP Control

In interpolation control, the designated interpolation feed rate is used as the maximum feed rate. The override for the interpolation feed rate can be set to a value between 0.1% and 199.9%. If the result set by using the override function to over 100% exceeds the maximum interpolation feed rate, the maximum interpolation feed rate is used instead.

Example: Execution in Stop Mode

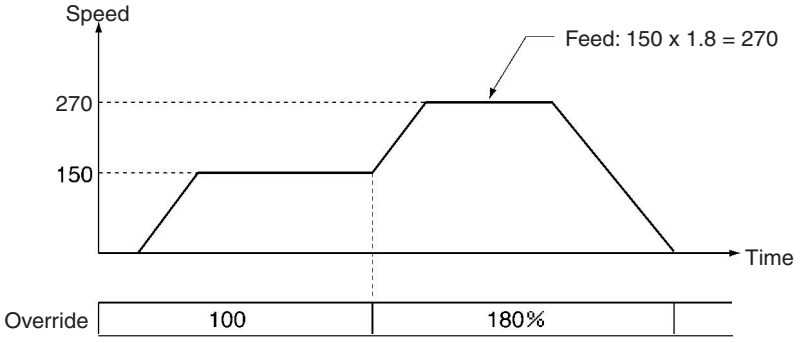

Note With linear or circular interpolation in either the Pass Mode or the In-position Check OFF Mode, the speed cannot be changed in real time during operation.

Setting an Override

To execute an override, set the override in the PLC Interface Area and turn ON the Override Setting Bit. The override will then be applied to subsequent operations.

PLC Interface Area

Name	MCU Model	Word				Bits	Description
		X axis	Y axis	Z axis	U axis		
Override	MC421 MC221	n+10 n+6	n+12 n+8	n+14 ---	n+16 ---	00 to 15	Override (4 digits hex) Setting range: 0001 to 07CF hex (0001 to 1999: 0.1 to 199.9%)
Override Setting	MC421 MC221	n+11 n+7	n+13 n+9	n+15 ---	n+17 ---	12	1: Override enabled 0: Override disabled

Even if an override is set for a given axis, it will be disabled if the Override Setting Bit is turned OFF.

The operation at this time will depend on the override function selection

Command Area

Address		R/W	Name	Description
MC221	MC421			
17E8 (6120)	17E8 (6120)	W	Override function selection (See note.)	15 L+1 00 15 L 00 0 0 0 0 0 0 0 X Enables or disables the override value after turning OFF the Override Setting Bit. Enable (X = 0): The set override value is enabled even after the Override Setting Bit is turned OFF, and operation proceeds with the set override value. Disable (X = 1): The override value is disabled after the Override Setting Bit is turned OFF, and operation proceeds with 100% override. The override is enabled (X = 0) when the power is turned ON.

Note The override function selection can be used only with Unit Ver. 1.15 or later, and with Units whose model number ends in -V1. For Unit Ver. 1.14 or earlier, the operation will be as described above for X = 0.

Refer to *5-3 PLC Interface Area* for timing charts and ladder programs.

6-13 Resetting the Error Counter

Overview

Mode: Automatic or Manual; **Method:** Bit designation

The error counter reset function resets the error counter to 0 and stops axis operation. This function is enabled when no speed reference is being provided to the Servo Driver (after an deceleration command is output). It can be used for molding applications (machine press control).

This function can be used with the MC Unit in either Automatic or Manual Mode, and it is executed from the PLC Interface Area. In the examples shown here, the Automatic Mode is used. Refer to *5-3 PLC Interface Area* for details.

Stop Mode

N000 P000 X
N010 G11 ← Specifies the Stop Mode.
N020 G01 X100 F100
tN030 G01 X200 F100
N040 G01 X300 F100

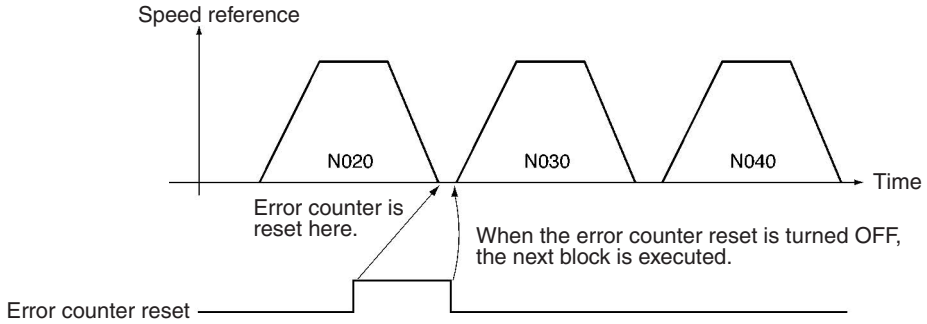

Pass Mode

N000 P000 X
N010 G01 X100 F100 ← Initial value: Pass Mode
N020 G01 X400 F150

N030 G11 ← Specifies the Pass Mode.
N040 G01 X100 F50

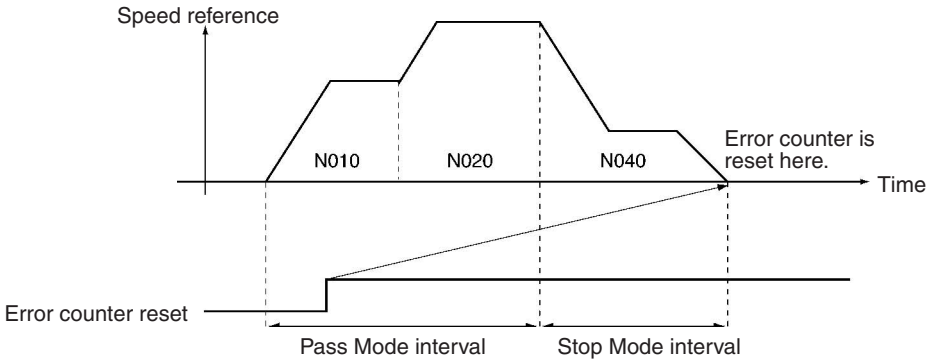

In-position Check OFF Mode

N000 P000 X
N010 G13 ← Specifies the In-position Check OFF Mode.
N020 G01 X100 F100
N030 G01 X200 F100
N040 G11 ← Stop Mode designation
N050 G01 X300 F100

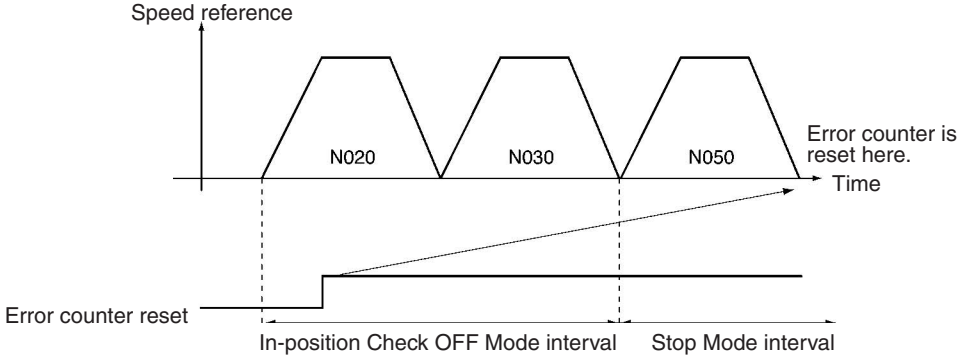

Note

1. The program cannot be executed while the error counter is ON.
2. The error counter reset can be used when jogging, origin search, and other operations are executed in Manual Mode.

In the following example, linear interpolation is executed in Stop Mode on the X axis. The operation and timing would be the same for either linear or circular interpolation using two or more axes.

N000 P000 X
N010 G11 ← Specifies the Stop Mode.
N020 G01 X100 F100
N030 G01 X-100 F100
...

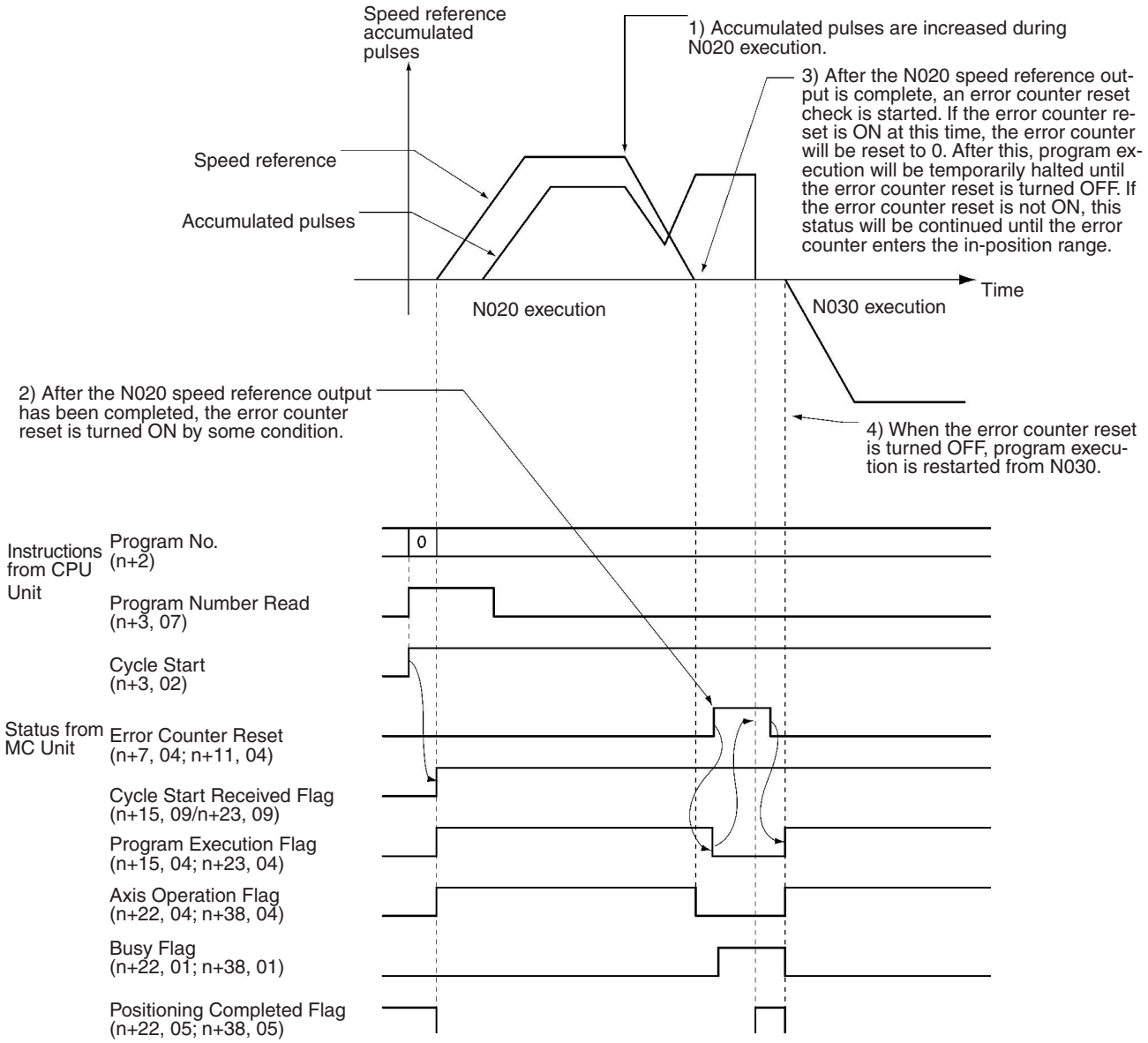

PLC Interface Area

Name	MCU Model	Word				Bit	Description
		X axis	Y axis	Z axis	U axis		
Error Counter Reset	MC421 MC221	n+11 n+7	n+13 n+9	n+15 ---	n+17 ---	04	0 to 1: Error counter reset 0: Functions can be received.

6-14 Servo Lock and Unlock

Overview

Mode: Automatic (servo lock); Automatic or Manual (servo unlock);
Method: Bit designation

This function creates (servo lock) or releases (servo unlock) an MC Unit position loop. In addition to the servo lock and unlock operations available for earlier MC Unit models, it is also possible to set general outputs as brake signal outputs and to turn them ON and OFF in sync with servo lock and unlock. The ON and OFF times can also be set as required.

If the machine parameters are set for a wiring check to be performed, it will be performed at powerup and with the first servo lock. If everything is normal, the wiring check will not be performed with the next servo lock.

Servo lock and unlock are executed from the PLC Interface Area.

PLC Interface Area

Name	MCU Model	Word				Bit	Description
		X axis	Y axis	Z axis	U axis		
Servo Lock	MC421 MC221	n+11 n+7	n+13 n+9	n+15 ---	n+17 ---	09	↑: Begin servo lock
Servo Unlock						10	↓: Begin servo unlock

6-14-1 Timing Charts

The following timing charts show the servo lock and servo unlock functions when the brake signal is set and the wiring check is enabled.

Servo Lock

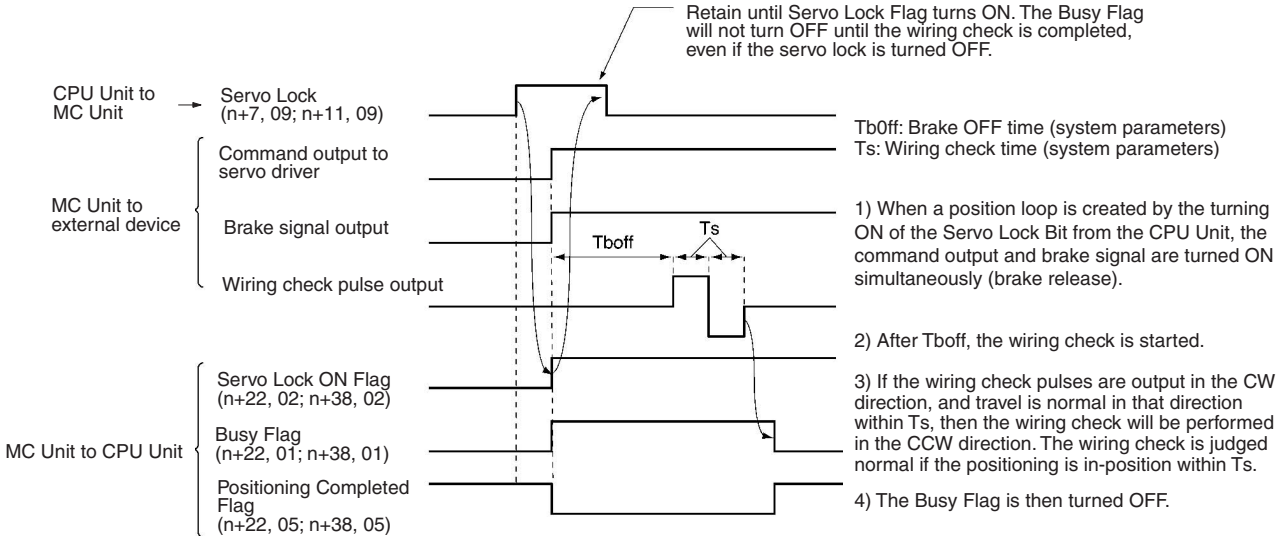

Servo Unlock

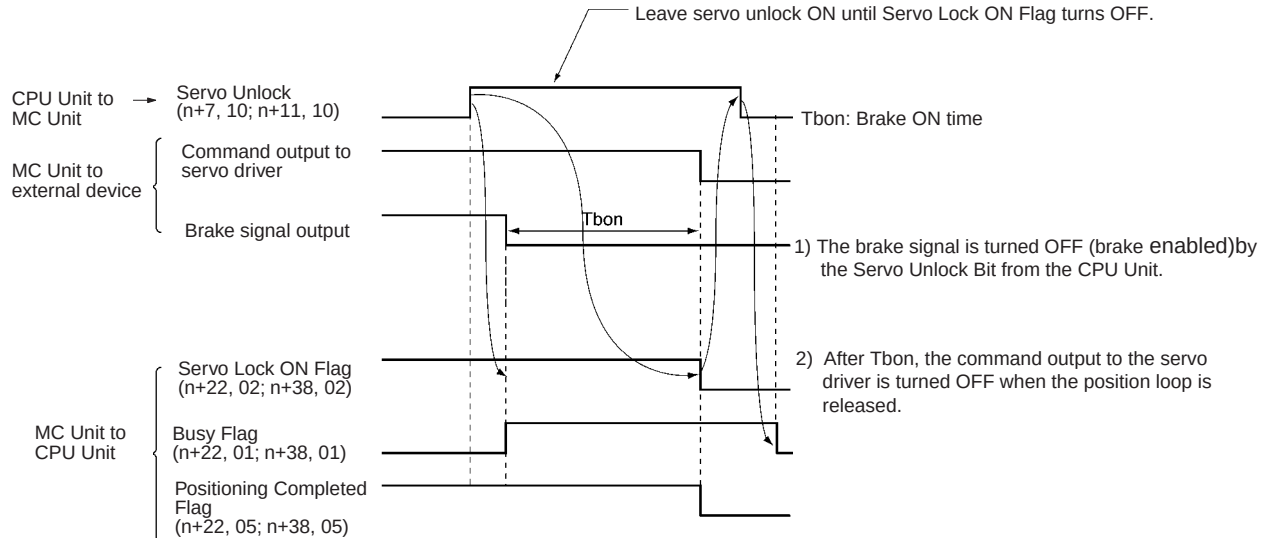

For timing charts with and without the brake signal and wiring check set, refer to the explanations of servo lock and unlock in *5-3 PLC Interface Area*.

6-14-2 Related System Parameters

The system parameters required for the output port settings and the wiring check are all set using CX-Motion. The IORD instruction can be used for reading only. Refer to the addresses shown in the following tables.

Unit Parameters

Address		R/W	Name	Configuration	Default setting
MC221	MC421				
0FA6 (4006)	0FA6 (4006)	R	Output port setting	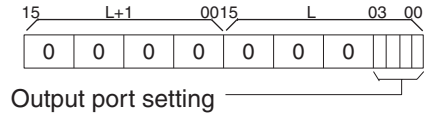 Specifies whether the output ports will be used for general output or brake signal output. Bits 00 to 03 correspond to output ports 1 to 4 if the ports are used for general output, and to axes X through U if the ports are used for brake signal output. 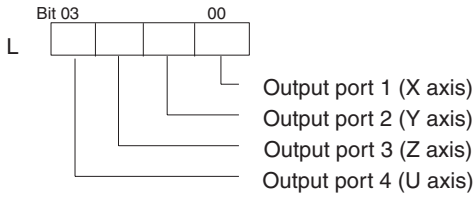 X = 0: General output, X = 1: Brake signal output	

Machine Parameters

Address				R/W	Name	Configuration	Default setting
MC221		MC421					
X axis	Y axis	Z axis	U axis				
107B (4219)	1094 (4244)	10AD (4269)	10C6 (4294)	R	Wiring check	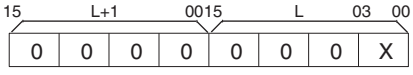 Specifies whether the wiring check function is used. X = 0: The wiring check function is not used. X = 1: The wiring check function is used.	
107C (4220)	1095 (4245)	10AE (4270)	10C7 (4295)	R	Wiring check time	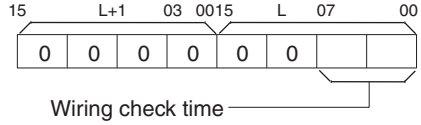 Specifies the wiring check time within a range of 0 to 99 (x 10 ms). Range: 00 to 63 Hex (0 to 99 [x 10 ms])	
107D (4221)	1096 (4246)	10AF (4271)	10C8 (4296)	R	Wiring check pulses	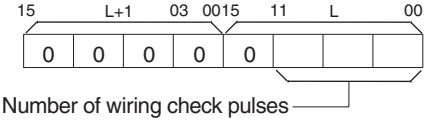 Specifies the number of pulses to check the wiring within a range of 0 to 999 pulses. Range: 000 to 3E7 Hex (0 to 999 [pulses])	

6-15 Backlash Correction

Overview

Mode: Automatic or Manual; **Method:** Command Area designation, CX-Motion

A backlash is a sudden backward movement of a driving axis that may be caused due to mechanical looseness as shown in the following illustration.

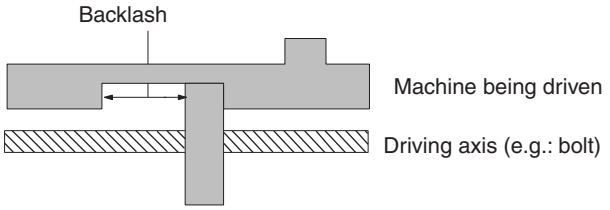

The positioning of a machine cannot be performed precisely if there is backlash.

As shown in the following illustration, for example, the position of a machine moved by 100 mm in the forward direction is different from that of the same machine moved by 100 mm in the reverse direction if there is a 1-mm backlash, even though there is no difference in position between the driving axes.

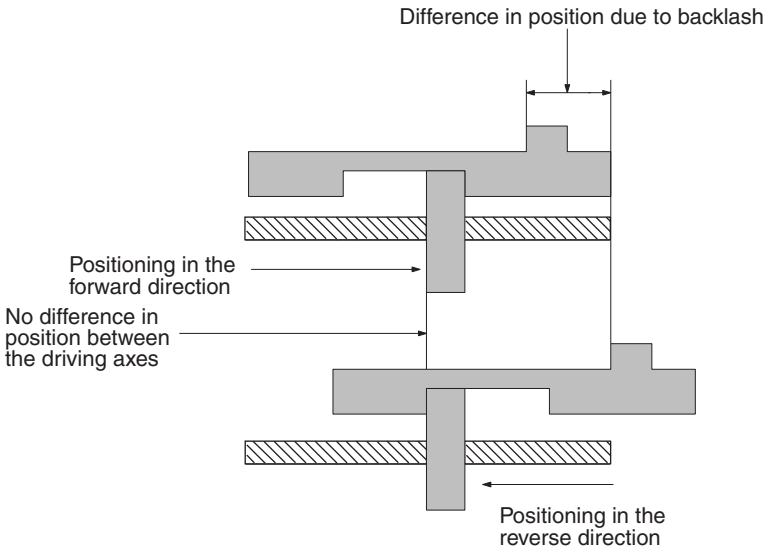

Backlash correction is a function for pre-registering the backlash space within a range of 0 to 10,000 pulses to minimize the positioning errors of machines moving in the forward or reverse direction to the same position, as shown in the following illustration. The setting is made with the backlash correction value in the servo parameters.

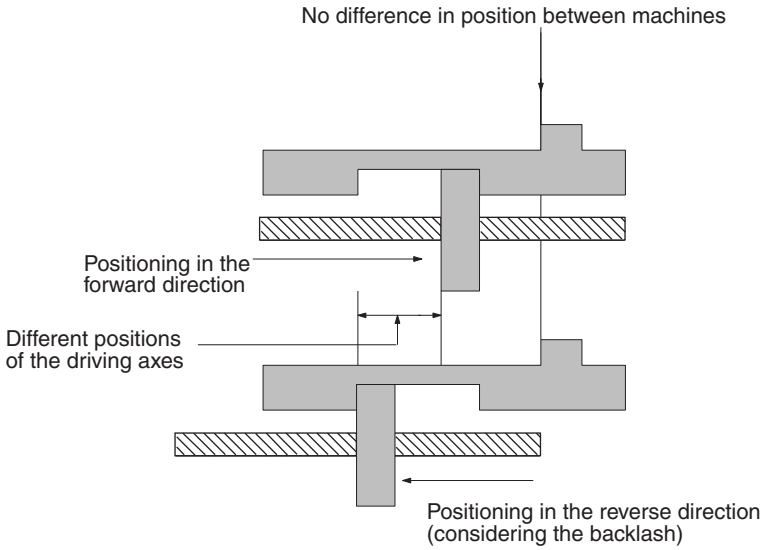

Backlash correction is executed either at powerup or when the axis is moved in the opposite direction from the direction in which it first moves after a restart.

6-15-1 Setting Backlash Correction

Either CX-Motion or the IOWR instruction can be used to set backlash correction.

Using CX-Motion

For details on using CX-Motion to make this setting, refer to the *CX-Motion Online Help*.

Using IOWR

For details on using the IOWR instruction to transfer data to the MC Unit, refer to *SECTION 4 Data Transfer and Storage*.

To use IOWR to set the backlash correction, set the backlash correction address in the IOWR control code (C) and then transfer the backlash correction value to the MC Unit.

X axis: Address 11FC hex (4604)
Y axis: Address 1215 hex (4629)
Z axis: Address 122E hex (4654)
U axis: Address 1247 hex (4679)

Specifications

The following is a basic explanation of the IOWR instruction specifications for setting the backlash correction. For a more detailed explanation, refer to *4-2 IOWR and IORD Specifications*.

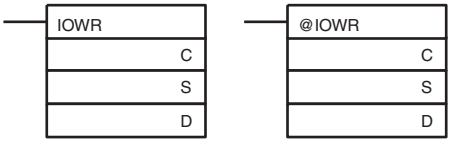

C: Control code, S: First source word, D: Destination unit number and total number of words to transfer

Operand	Description
C	MC Unit address (Hex) Specifies the first address in the MC Unit to which data will be written. X axis: Address 11FC Hex (4604) Y axis: Address 1215 Hex (4629) Z axis: Address 122E Hex (4654) U axis: Address 1247 Hex (4679)
S	First source word Specifies the first word in the CPU Unit from which data is to be transferred.
D	D+1 / D Total number of words to transfer (Hex) / Destination unit number (Hex) Specify the destination unit number to which data will be transferred and the total number of words to transfer. Number of words to transfer: Always 0002 Hex. (Refer to Transfer Data below.) Destination unit number: MC221: 0000 to 005D Hex (Unit numbers 0 to 93) MC421: 0000 to 005B Hex (Unit numbers 0 to 91) Example: #0002003, when two words of data are transferred to Unit #3.

Transfer Data

Set the following data in the words beginning at the first source word, and execute the IOWR instruction.

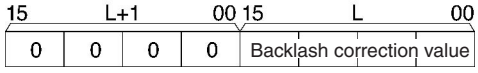

Set the backlash correction value for the X and Y axes between 0000 and 2710 hex (0 to 10,000).

Programming Example

In the following example for transferring data, the MC Unit is mounted to a CS-series PLC and assigned unit number 0. In this example, the backlash correction value is set to 1,000 pulses, and the IOWR operands and the data to be transferred are assumed to be normal.

When debugging, check the Error Flags from the ladder program.

Ladder Program

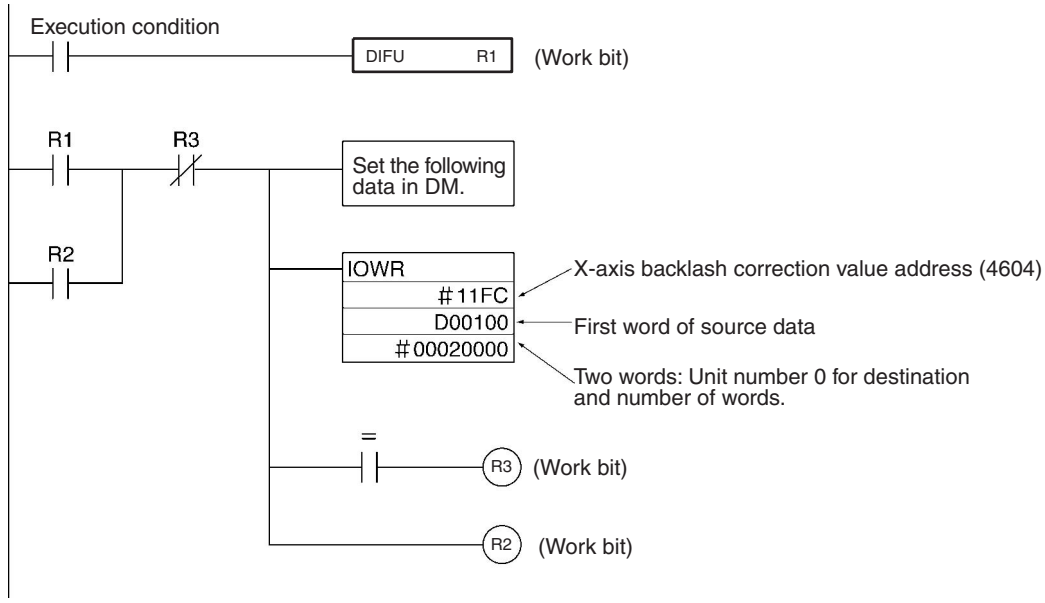

Transfer Data (DM)

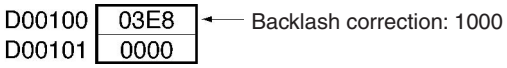

6-16 Automatic Loading

Overview

Mode: Automatic or Manual; **Method:** Command Area designation, CX-Motion

A maximum of 100 programs and up to 2,000 blocks in all programs total can be saved. The automatic loading function is provided for additional programs in order to support applications requiring more program capacity. This function allows more programs or program blocks to be executed by treating external memory devices connected to a personal computer running CX-Motion as MC Unit memory.

The automatic loading function is executed by the IOWR instruction for the Command Area. Either Automatic Mode or Manual Mode can be used.

Any number from 1 to 10,000 can be specified as the job number. CX-Motion must be used to create MC programs and position data in advance for job numbers that are to be used.

Be sure that the program can be compiled by CX-Motion before transferring the program with automatic loading. Programs that cannot be compiled will not be transferred.

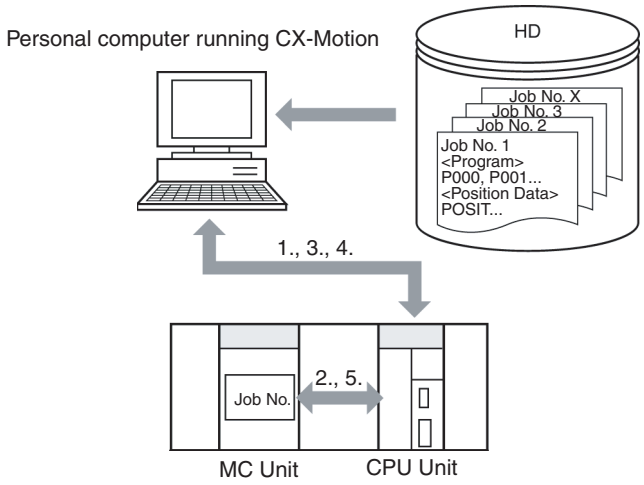

Explanation

1,2,3...

1. The MC Unit's job number is always monitored by CX-Motion.
2. Using the IOWR instruction, a new job number is written to the job number currently in the MC Unit.
3. When CX-Motion detects the specified job number, the program and position data are downloaded to the MC Unit from the file for that job number created by CX-Motion.
4. Before downloading the program and position data, CX-Motion deletes from the MC Unit all of the programs for all tasks. Then it downloads the program and position data for the specified job number.
5. When the downloading has been completed, the CPU Unit is notified from the MC Unit. While the program and position are being downloaded, the Autoloading Bit in the PLC Interface Area turns from OFF to ON, and when the downloading is completed normally it turns from ON to OFF.

6-16-1 Executing Automatic Loading

To execute automatic loading, set one of the following addresses for the control code (C) of the IOWR instruction and then transfer the job number to the MC Unit.

For details on the Command Area, refer to *3-6 Command Area*. For details on IOWR instruction specifications, refer to *SECTION 4 Data Transfer and Storage*.

The Autoloading Time Up time is set with CX-Motion. The IORD instruction can be used for reading only.

Address		R/W	Name	Configuration
MC221	MC421			
17D8 (6104)	17D8 (6104)	R/W	Specifying automatic loading	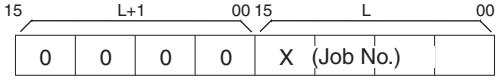 This parameter is used when batch downloading programs and position data to an MC Unit from the external memory device of a personal computer with CX-Motion. X (Job No.) Specifies a job number within a range from 0001 to 2710 Hex (1 to 10,000). The following contents can be read from this address using an IORD instruction. X = 0000: Power supply ON, automatic loading completed normally X = 0001 to 2710 Hex (1 to 10,000): Specified job number or executing job number
0FA9 (4009)	0FA9 (4009)	R	Teaching Box language/autoload timeout	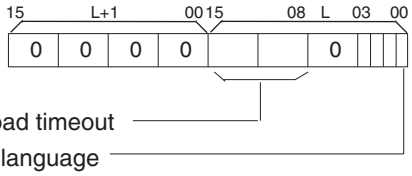 T.Box language Specifies whether the T.Box message is displayed in English or Japanese. (Only bit 0 is valid) X = 0: English, X = 1: Japanese Autoload timeout Specifies whether the time up time is displayed when the automatic loading function is used. Range: 00 to B4Hex (0 to 180 s) Time up will not be monitored if 00 is set.

Note Programs and position data will not be properly downloaded to the MC Unit if the personal computer cable is disconnected or CX-Motion downloading is interrupted during execution of the automatic downloading function. If that occurs, perform the operation again.

Ladder Programming Example

In this example, job number 100 is specified. The MC Unit is mounted to a CS-series PLC and assigned unit number 0, and the job number to be transferred (job number 100) is stored in words D00100 and D00101. Both the IOWR operands and the data to be transferred are assumed to be normal.

When debugging, check the Error Flags from the ladder program.

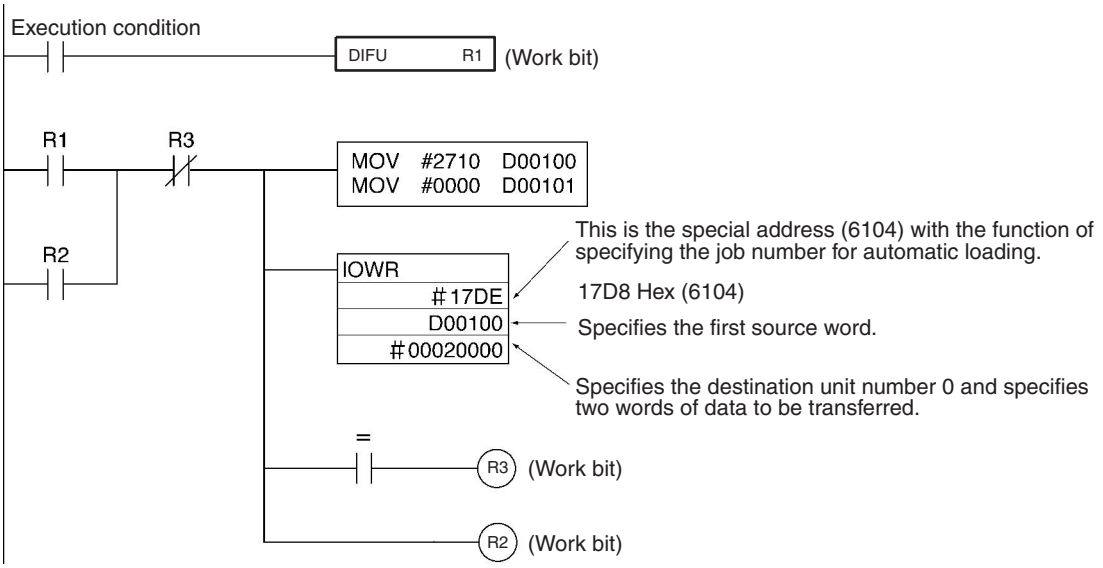

Transfer Data (DM)

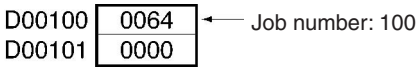

6-16-2 Related Bits in the PLC Interface Area

Bit name	Model	Words	Bit	Description
Autoloading Error Reset Bit	MC421 MC221	n n	05	↑: Error reset for automatic loading
Autoloading Flag	MC421 MC221	n+10 n+18	04	↑: Automatic loading begun. ↓: Automatic loading finished.
Autoloading Error Flag	MC421 MC221	n+10 n+18	05	↑: Error occurred during automatic loading ↓: Automatic loading error reset turned ON.

For details on the PLC Interface Area, refer to *5-3 PLC Interface Area*.

Autoloading Flag

This flag turns ON when the data for the specified job number begins to be downloaded as the result of executing the IOWR instruction. It turns OFF when all of the data for that job number has been downloaded.

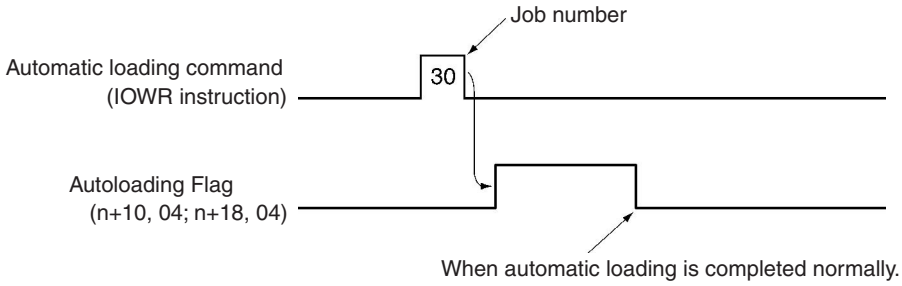

Autoloading Error Flag and Error Reset Bit

The Autoloading Error Flag turns ON when an error occurs during automatic loading. When the Autoloading Error Reset Bit is turned ON, the Autoloading Error Bit will turn OFF. Unless the cause of the error has been cleared, however, the Autoloading Error Flag will turn back ON again the next time the automatic loading is executed.

If communications are not restarted by the time the Autoloading Time Up set in the Unit parameters has elapsed, an error will occur and the Autoloading

Error Flag will turn ON. If that occurs, the data transferred up to that point will be discarded.

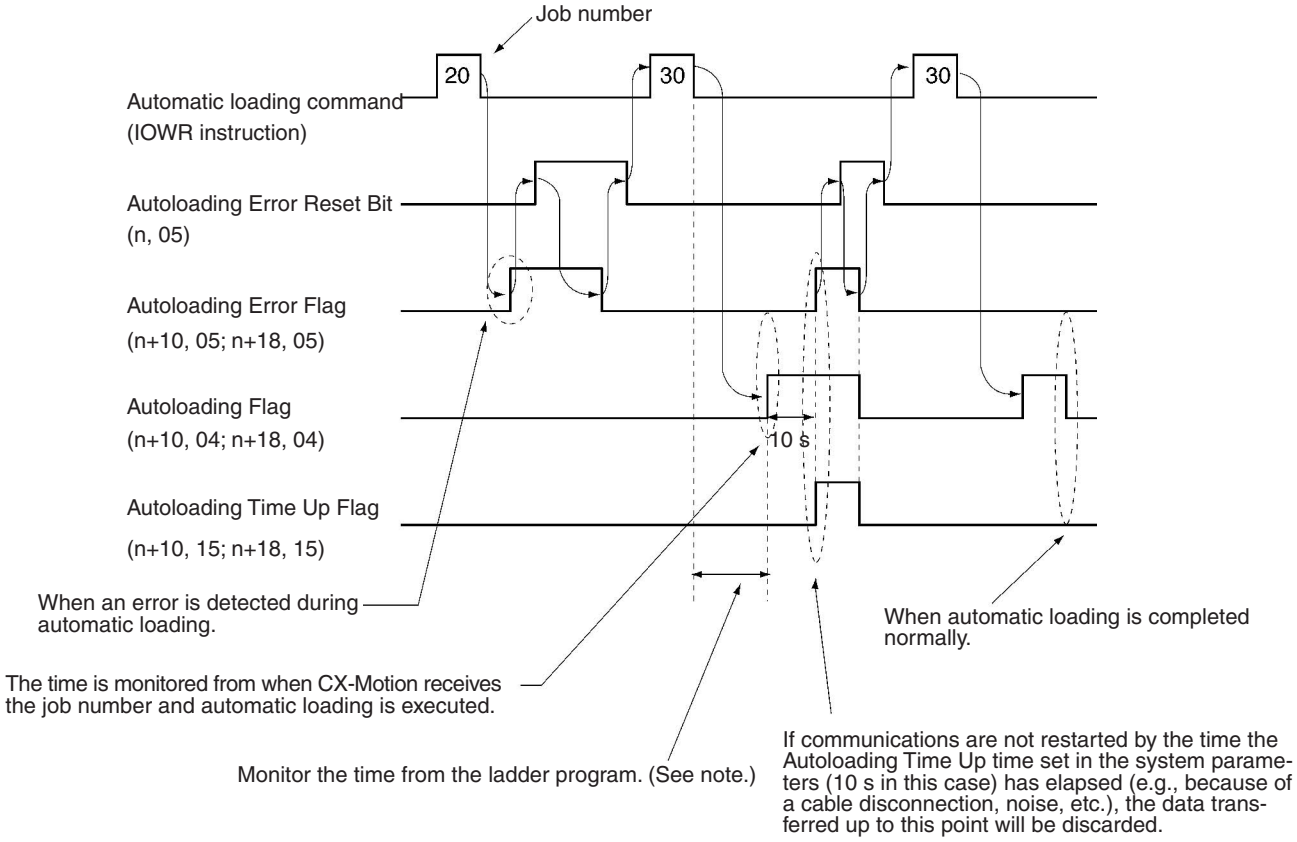

Note The MC Unit does not monitor the time from when it receives the automatic loading command until the Autoloading Flag turns ON. There may be cases where the power to the personal computer is turned OFF or a cable is disconnected, so monitor this time from the ladder program.

6-17 Present Position Preset

Overview

Mode: Manual; **Method:** Command Area designation

The present position preset function is used to preset the preset position to any given value. With previous MC Unit models, it was executed from the PLC Interface Area, but with the MC221 and MC421 it is executed by an IOWR instruction using the Command Area. It can only be used in Manual Mode, and will be ignored if used in Automatic Mode.

After the present position has been preset, the reference origin is established automatically, so there is no need to execute an origin search. It is also possible to set the present position as the origin by using the present position preset function to set the present position to "0."

⚠ **Caution** When present position preset is executed for an axis for which an absolute encoder is used, only the present position stored in the MC Unit will be preset. The present position stored in the absolute encoder will not be preset, and it will be automatically updated with the next servo-lock.

6-17-1 Executing Present Position Preset

To execute present position preset, set the following addresses for the IOWR instruction's control code (C) and then transfer the present position preset value to the MC Unit. For details on the Command Area, refer to *3-6 Command Area*. For details on IOWR specifications, refer to *SECTION 4 Data Transfer and Storage*.

Address		R/W	Name	Configuration
MC221	MC421			
17DE (6110)	17DE (6110)	W	Presetting the X-axis present position	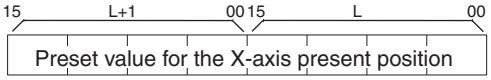 Sets the X-axis present position to any value and establishes the origin. The data is 32-bit signed binary data. L+1: Leftmost 16 bits, L: Rightmost 16 bits Range: FD9DA601 to 026259FF Hex (–39999999 to 39999999) The minimum setting unit is set to 2 (for 0.01), the display unit is set to 0 (for mm), and the reference origin offset is 3.99 [mm] (i.e., 399 x 0.01) if the data is 399.
17DF (6111)	17DF (6111)	W	Presetting the Y-axis present position	Sets the Y-axis present position to any value and establishes the origin. The data configuration is the same as that for presetting the X-axis present position.
---	17E0 (6112)	W	Presetting the Z-axis present position	Sets the Z-axis present position to any value and establishes the origin. The data configuration is the same as that for presetting the X-axis present position.
---	17E1 (6113)	W	Presetting the U-axis present position	Sets the U-axis present position to any value and establishes the origin. The data configuration is the same as that for presetting the X-axis present position.

Ladder Programming Example

In this example, the X-axis present position is set to 10,000. The MC Unit is mounted to a CS-series PLC and assigned unit number 0, and the data to be transferred (i.e., the present position) is stored in words D00100 and D00101. Both the IOWR operands and the data to be transferred are assumed to be normal.

When debugging, check the Error Flags from the ladder program.

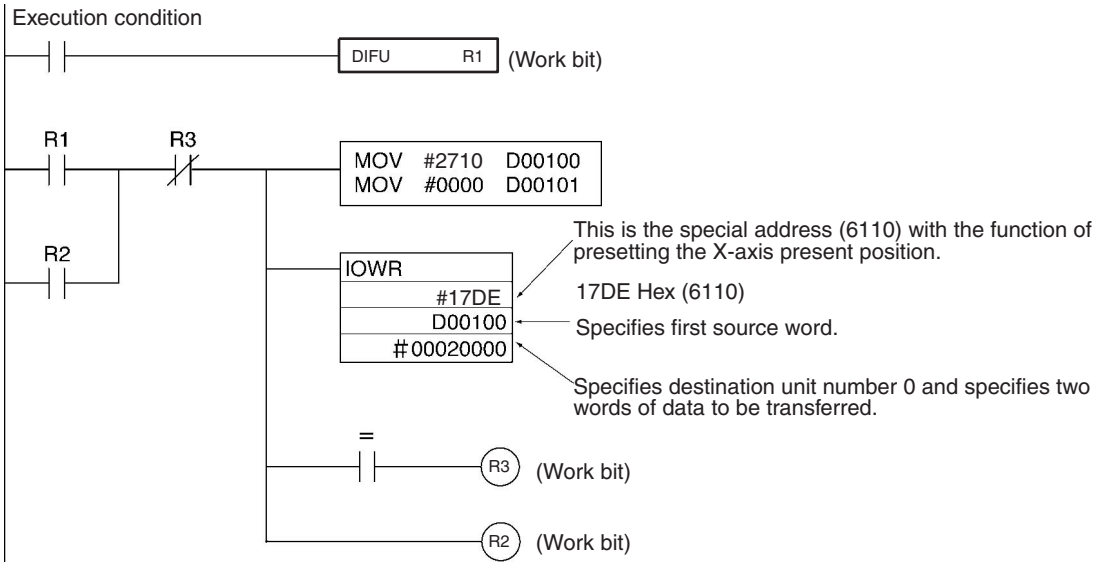

Transfer Data (DM)

D00100	2710	← Present position preset value: 10000
D00101	0000	

6-18 Electronic Gear Function

Overview

Mode: Manual; **Method:** System parameter setting (IOWR or CX-Motion)

The electronic gear function is provided for operations such as using a Manual Pulse Generator (MPG) for handle feeding or using an absolute encoder for synchronizing axis feeding with a conveyer. Both the numerator and denominator can be specified, so this electronic gear function enables more precise feed control than was possible with previous MC Unit models.

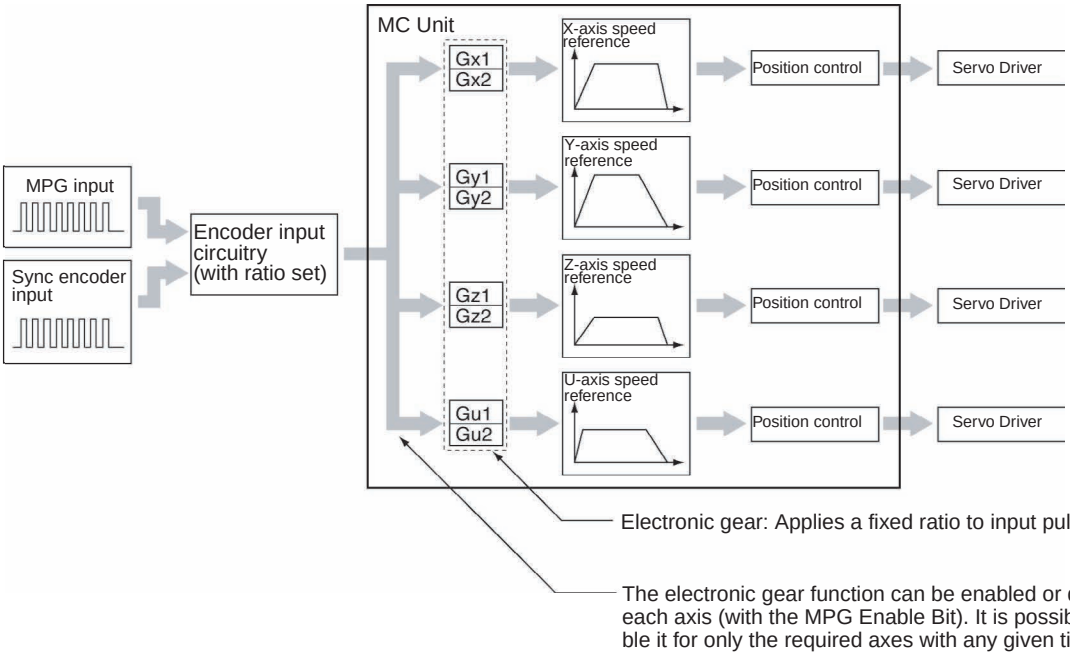

6-18-1 Setting the System Parameters

Setting MPG or Sync Encoder

Using CX-Motion, make the setting in the Unit parameters to determine whether an MPG or a sync encoder is to be used for pulse inputs.

The IORD instruction can also be used to read the parameter settings For addresses, refer to *3-3-4 Data Configuration for System Parameters*.

This setting specifies the ratio for pulse input devices connected to the MPG or sync encoder. For the MPG, it is used to maintain a ratio of one. When it is set for a sync encoder, the ratio can be specified as 1, 2, or 4.

Setting the Electronic Gear Ratio

When an MPG is used, the electronic gear ratio is the same as it was for previous MC Unit models.

The gear ratio for the MC221 and MC421 is set by CX-Motion or by an IOWR instruction. There are two ways to change the electronic gear ratio:

- Change the electronic gear combination using the PLC Interface Area. (A maximum of four can be changed in this way.)

- Specifying the electronic gear combination in the PLC Interface Area, and then using an IOWR instruction to change that value directly. (The number of combinations is unlimited.)

Regardless of which of these methods is used, the change will go into effect immediately.

Note With the electronic gear function, when there is a remainder in the total when the input pulses are multiplied by the gear ratio, it is possible to achieve highly accurate synchronization by adding the remaining pulses to the next input pulses. If the electronic gear ratio is changed during a synchronized operation, however, the remainder will be taken as 0 and the calculation will begin with the new electronic gear ratio. For that reason there will be a temporary drop in speed from that which was in effect before the gear ratio was changed.

Using CX-Motion

For details on using CX-Motion to set the electronic gear ratio, refer to the *CX-Motion Online Help*.

Using IOWR

Use the IOWR instruction to specify the following addresses for the control code, and set the numerator and denominator in any area. (Refer to the ladder programming example provided below.) The addresses are shown in hexadecimal, with their decimal number equivalents shown underneath in parentheses.

Address				R/W	Name	Configuration	Default setting
MC221		MC421					
X axis	Y axis	Z axis	U axis				
113A (4410)	1153 (4435)	116C (4460)	1185 (4485)	R/W	MPG ratio numerator (1)/ electronic gear numerator (1)	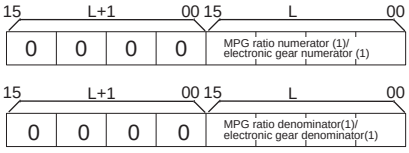 Sets the ratio for an MPG/electronic gear pulse for setting 1. Range of numerator: D8F0 to 2710 hex (–10000 to 10000) Range of denominator: 0001 to 2710 hex (1 to 10000) 0.0001 ≤ |Numerator/denominator| ≤ 10000 If the numerator is negative, operation will be in the reverse direction. If the numerator was negative with Unit Ver. 1.14 or earlier, the limit input for the direction opposite from travel was monitored, but with Unit Ver. 1.15 or larger and with Units whose model number ends in -V1, the limit input in the direction of travel is monitored. Consider this point in system design.	0000 0001 (1)
113B (4411)	1154 (4436)	116D (4461)	1186 (4486)	R/W	MPG ratio denominator(1)/ electronic gear denominator(1)		0000 0001 (1)
113C (4412)	1155 (4437)	116E (4462)	1187 (4487)	R/W	MPG ratio numerator (2)/ electronic gear numerator (2)	Sets the ratio for an MPG/electronic gear pulse for setting 2. The data configuration and range are the same as those for MPG ratio/ electronic gear numerator (1)/denominator (1).	0000 000A (10)
113D (4413)	1156 (4438)	116F (4463)	1188 (4488)	R/W	MPG ratio denominator (2)/ electronic gear denominator (2)		0000 0001 (1)

Address				R/W	Name	Configuration	Default setting
MC221		MC421					
X axis	Y axis	Z axis	U axis				
113E (4414)	1157 (4439)	1170 (4464)	1189 (4489)	R/W	MPG ratio numerator (3)/ electronic gear numerator (3)	Sets the ratio for an MPG/electronic gear pulse for setting 3. The data configuration and range are the same as those for MPG ratio/ electronic gear numerator (1)/denominator (1).	0000 0064 (100)
113F (4415)	1158 (4440)	1171 (4465)	118A (4490)	R/W	MPG ratio denominator (3)/ electronic gear denominator (3)		0000 0001 (1)
1140 (4416)	1159 (4441)	1172 (4466)	118B (4491)	R/W	MPG ratio numerator (4)/ electronic gear numerator (4)	Sets the ratio for an MPG/electronic gear pulse for setting 4. The data configuration and range are the same as those for MPG ratio/ electronic gear numerator (1)/denominator (1).	0000 00C8 (200)
1141 (4417)	115A (4442)	1173 (4467)	118C (4492)	R/W	MPG ratio denominator (4)/ electronic gear denominator (4)		0000 0001 (1)

Ladder Programming Example

In this example, the electronic gear ratio for set value 1 of the X axis (address 113A hex) is set to 0.1 (1/10). The MC Unit is mounted to a CS-series PLC and assigned unit number 0, and the data to be transferred (i.e., the numerator and denominator) is stored in words D00100 to D00103. Both the IOWR operands and the data to be transferred are assumed to be normal.

When debugging, check the Error Flags from the ladder program.

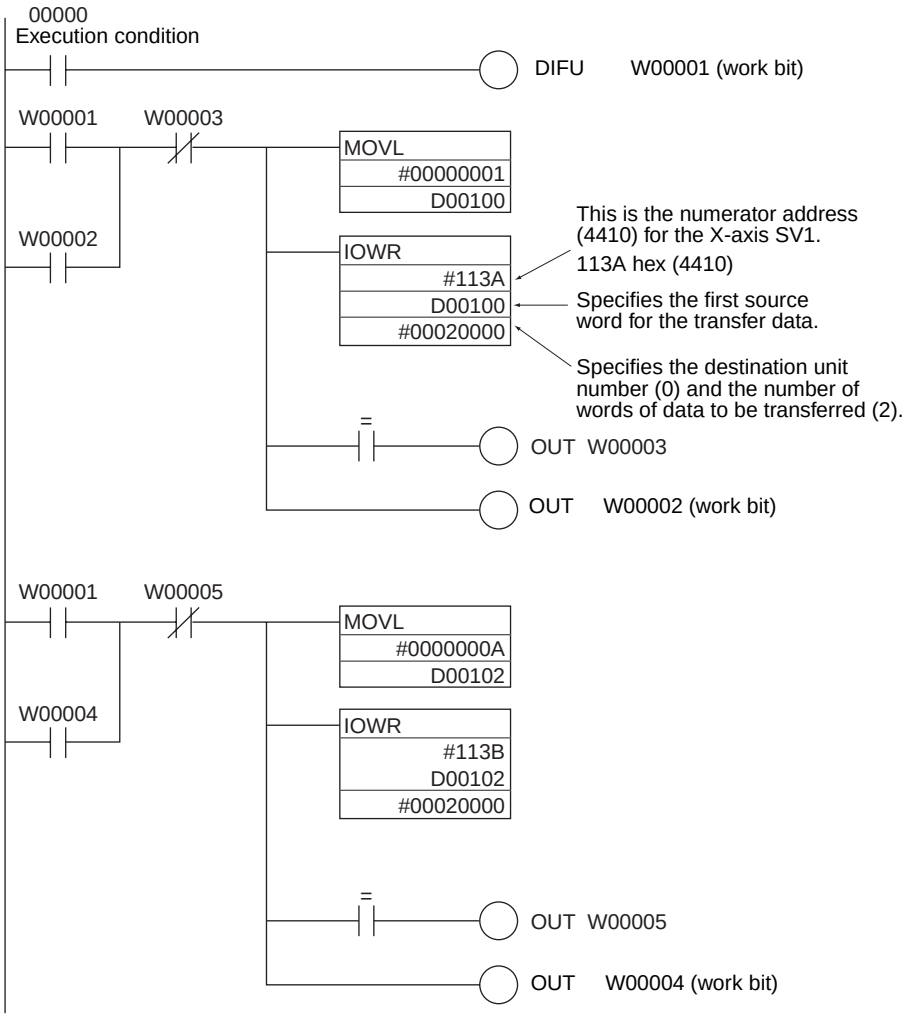

Transfer Data (DM)

D00100	0001	← SV1 numerator: 1
D00101	0000	
D00102	000A	← SV1 denominator: 10
D00103	0000	

6-18-2 Related Bits

The following table shows the methods for selecting set values 1 to 4 and enabling the selected set value. For details, refer to *5-3 PLC Interface Area*.

<table>
<tr><th rowspan="2">Bit name</th><th rowspan="2">MCU Model</th><th colspan="4">Word</th><th rowspan="2">Bit</th><th rowspan="2">Description</th></tr>
<tr><th>X axis</th><th>Y axis</th><th>Z axis</th><th>U axis</th></tr>
<tr><td>Enable MPG Sync Encoder</td><td>MC421
MC221</td><td>n+11
n+7</td><td>n+13
n+9</td><td>n+15
---</td><td>n+17
---</td><td>08</td><td>↑: Begin MPG operation.
1: Continue MPG operation.
↓: Stop MPG operation.</td></tr>
<tr><td>MPG Sync Encoder Ratio Specifier 1</td><td></td><td></td><td></td><td></td><td></td><td>14</td><td rowspan="2"><table><tr><th>MPG ratio specifier
2 1</th><th>MPG ratio selection</th></tr><tr><td>0 0</td><td>Select MPG ratio 1</td></tr><tr><td>0 1</td><td>Select MPG ratio 2</td></tr><tr><td>1 0</td><td>Select MPG ratio 3</td></tr><tr><td>1 1</td><td>Select MPG ratio 4</td></tr></table></td></tr>
<tr><td>MPG Sync Encoder Ratio Specifier 2</td><td></td><td></td><td></td><td></td><td></td><td>15</td></tr>
</table>

6-19 Acceleration and Deceleration Curves

Overview

Mode: Automatic or Manual; **Method:** System parameters (CX-Motion only)

In positioning operations, the speed is accelerated gradually at the beginning and decelerated gradually toward the end to achieve smooth movement. For the MC Unit, either a trapezoidal curve or an S curve can be used as the acceleration and deceleration curve for the starting and stopping operations for each axis.

The acceleration/deceleration curve selection, acceleration time, and deceleration time are set using CX-Motion. Refer to the *CX-Motion Online Help* for details on setting methods. The acceleration and deceleration times can also be set from the ladder program using the IOWR instruction. Refer to *3-3-4 Data Configuration for System Parameters* for addresses.

Trapezoidal Curve

With the trapezoidal curve, acceleration is constant during the acceleration time and deceleration time.

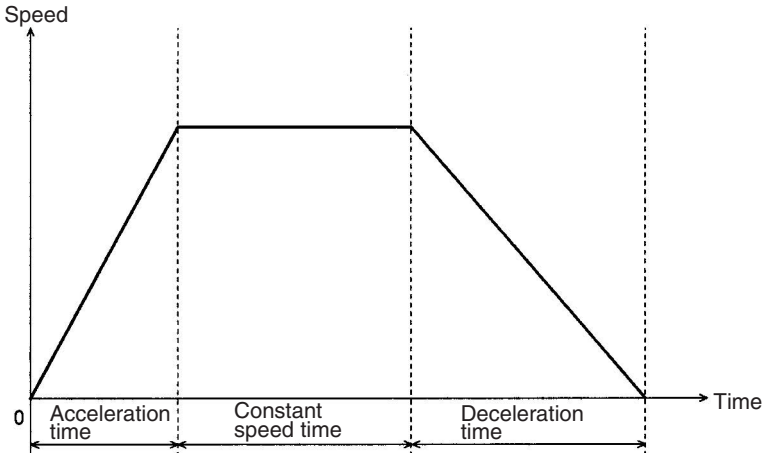

S Curve

With the S curve, acceleration during the acceleration time and deceleration time changes with time. When the initial acceleration speed is reduced for acceleration or deceleration, the acceleration or deceleration time can be

shortened using the S curve if there is a leeway in the maximum acceleration speed.

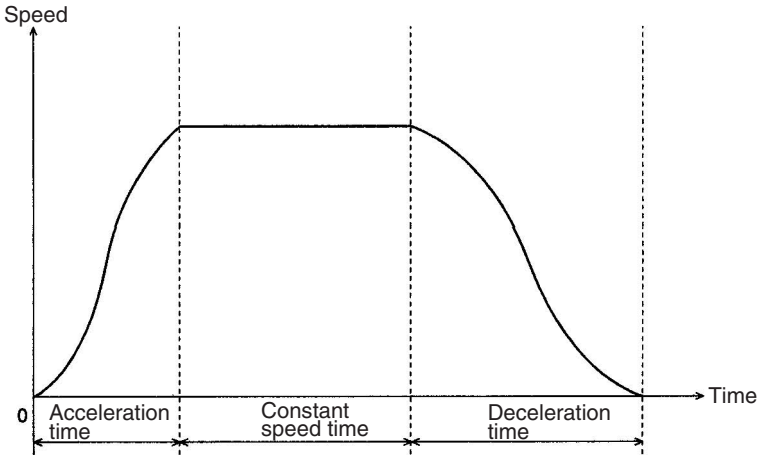

Note If the acceleration time or the deceleration time is the same, the maximum acceleration in the S curve is 1.5 times that in the trapezoidal curve. Therefore, when using a program set for a trapezoidal curve for an S curve, the acceleration and deceleration times set for the trapezoidal curve must be multiplied by 1.5. The maximum acceleration in the S curve will then fall within the acceleration set for the trapezoidal curve, allowing the motor to be driven smoothly.

The S curve used by the MC Unit uses a tertiary function, as shown in the following diagram.

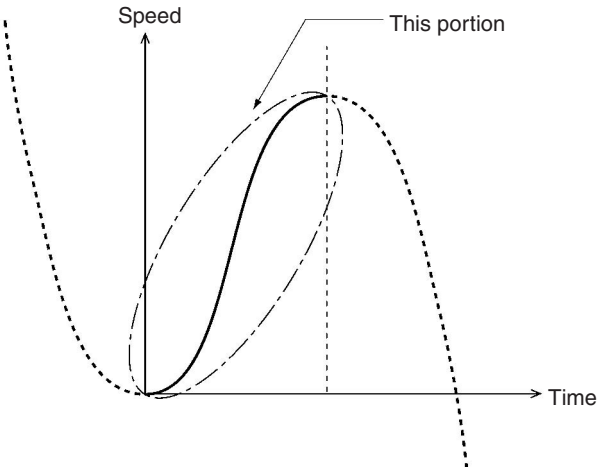

6-20 Unlimited Feeding

Overview

Mode: Automatic or Manual; **Method:** System parameters (CX-Motion only)

The unlimited feeding function makes it possible to control axes for applications such as turntables or one-direction conveyers, which require unlimited feeding. With axes set for unlimited feeding, the present position can be updated for any set range. In the case of a turntable, for example, the present

position will be updated as shown in the following diagram if a range of 0° to 360° is set. The number of turns will be remembered.

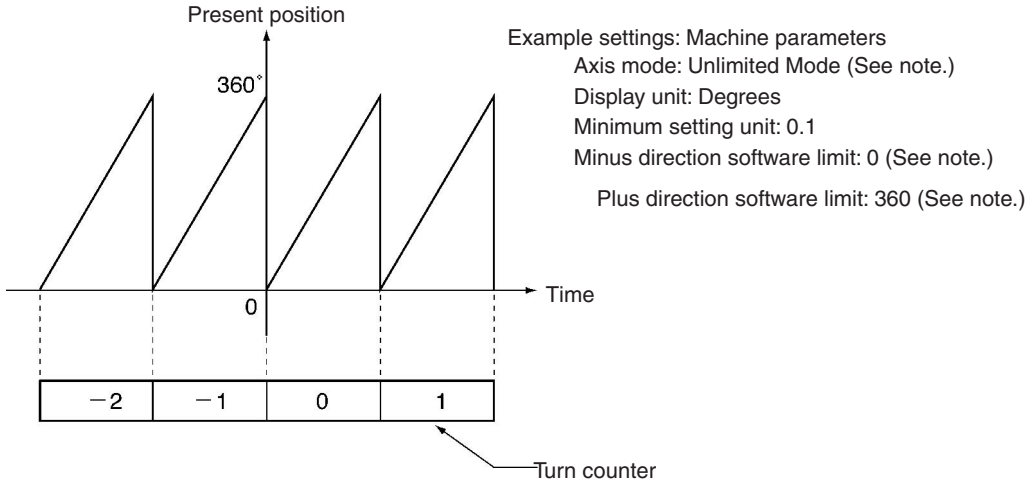

Note Setting these machine parameters will set unlimited feeding.

6-20-1 Setting System Parameters

The following system parameter must be set when using the unlimited feeding function:

- Axis mode (machine parameter): Unlimited Feed Mode

This parameter must be set using the CX-Motion. The IORD instruction can only be used to read the parameter setting. For addresses, refer to *3-3-4 Data Configuration for System Parameters*.

When Unlimited Feed Mode is set as the axis mode, the software limits will not operate regardless of whether or not the origin has been determined.

The present position is set by the ring counter method at the value determined by the positive and negative software limits, using the minimum setting unit, so in the Unlimited Feed Mode be sure to set the origin (0) between the positive and negative software limits. (Refer to the examples below.)

The positive and negative software limits are set in the same way by CX-Motion. The IORD instruction can be used to read the parameter settings. For addresses, refer to *3-3-4 Data Configuration for System Parameters*.

Example 1 In this example, the display unit is degrees, the minimum setting unit is 0.1, the negative software limit is 00, and the positive software limit is 360.0. The present position will be between 0.0 and 359.9.

Example 2 In this example, the display unit is degrees, the minimum setting unit is 0.1, the negative software limit is 360.0, and the positive software limit is 360.0. The present position will be between –360.0 and 359.9.

All axis operation commands can be used with the Unlimited Feed Mode. For example, an error would normally be generated for G01 if the origin is not determined, but that command can be used if the axis mode is set to Unlimited Feed Mode.

Note When the present position update range is converted to pulses, select a gear ratio and encoder resolution such that it will be expressed in integers. If it is not in integers, the errors will accumulate whenever the present position update range is exceeded, and correct positioning will not be possible.

For example, when controlling a turntable, suppose that the present position update range is 0° to 360°. If the gear ratio is 7/99 and the encoder resolution is 1,000 pulses, the following error will be accumulated with each 360-degree turn.

Gear ratio (degrees/pulse)
= 7 x 360° / (99 x 1,000 pulses)
= 2,520 / 99,000 pulses

360° x 99,000 / 2,520 = 14,142.857 pulses

Thus an error of 0.857 pulses will be accumulated with each turn.

Restrictions on Unlimited Axis Operation for Servomotors (U Series or W Series) with Absolute Encoders

When using a U-series Servomotor with an absolute encoder, the denominator of the gear ratio for the gear must be a factor of 10,000.

For example, gear ratios of 1/2, 1/4, 1/5, 1/20, 1/25, 1/40, 1/50, and 1/100 can be selected. The servolocked present value must be regenerated when the gear ratio is selected. Present value regeneration is performed according to the following calculations.

A: Binary counter present value

A ÷ No. of pulses per motor revolution = Quotient B; Remainder C

B ÷ Gear ratio = Quotient D; Remainder E

Convert the result of {E × No. of pulses per motor revolution + C} according to the present value unit used and transfer it to the MC Unit.

When using a W-series Servomotor, by setting the absolute encoder multi-turn limit setting (Pn205), a gear with a different gear ratio (1/n) from the ones above can be used. If the absolute encoder multi-turn limit setting (Pn205) is set to {gear ratio ÷1}, because the servolocked present value is equal to the present value on the turntable, the present value does not have to be regenerated.

6-21 Stopping

The MC Unit has various ways of stopping axis operation, as shown in the following table.

Method	Activation timing	Remarks
Manual/Automatic Bit	Upon input.	Each axis is decelerated to a stop upon input. During interpolation operations, axis operation is stopped after moving from the interpolation locus.
Cycle Start OFF	When G-language program interpretation is started.	This bit is checked when interpretation of the G-language is started (at the beginning of a block). If it is OFF, the G-language program is not executed. In In-position Check OFF Mode or Pass Mode, however, this bit is not checked until the next block.
Pause ON	Upon input.	Each axis is decelerated to a stop upon input. During interpolation, axis operation is stopped at the interpolation locus.
Forced Block End	Upon input.	Each axis is decelerated to a stop upon input. During interpolation operations, axis operation is stopped after moving from the interpolation locus.
Optional End	Upon input.	Each axis is decelerated to a stop upon input. During interpolation operations, axis operation is stopped after moving from the interpolation locus.

Method	Activation timing	Remarks
Servo Unlock	Upon input.	The servo is unlocked upon input. During program operation, the servo will be unlocked for the specified axis and the other axes in the same task will be decelerated to a stop.
Emergency Stop	Upon input.	Each axis is stopped immediately upon input. There are two methods for stopping: accumulated-pulse stop and servo-off stop. The selection is made in the system parameters.
CCW, CW Limit Inputs	Upon input.	Each axis is stopped immediately upon input. There are two methods for stopping: accumulated-pulse stop and servo-unlock stop. The selection is made in the system parameters.
Software Limit ON	When a software limit is exceeded.	Each axis is decelerated to a stop when a software limit is exceeded. During interpolation operations, axis operation is stopped after moving from the interpolation locus.
Other errors	Refer to *SECTION 12 Troubleshooting.*	

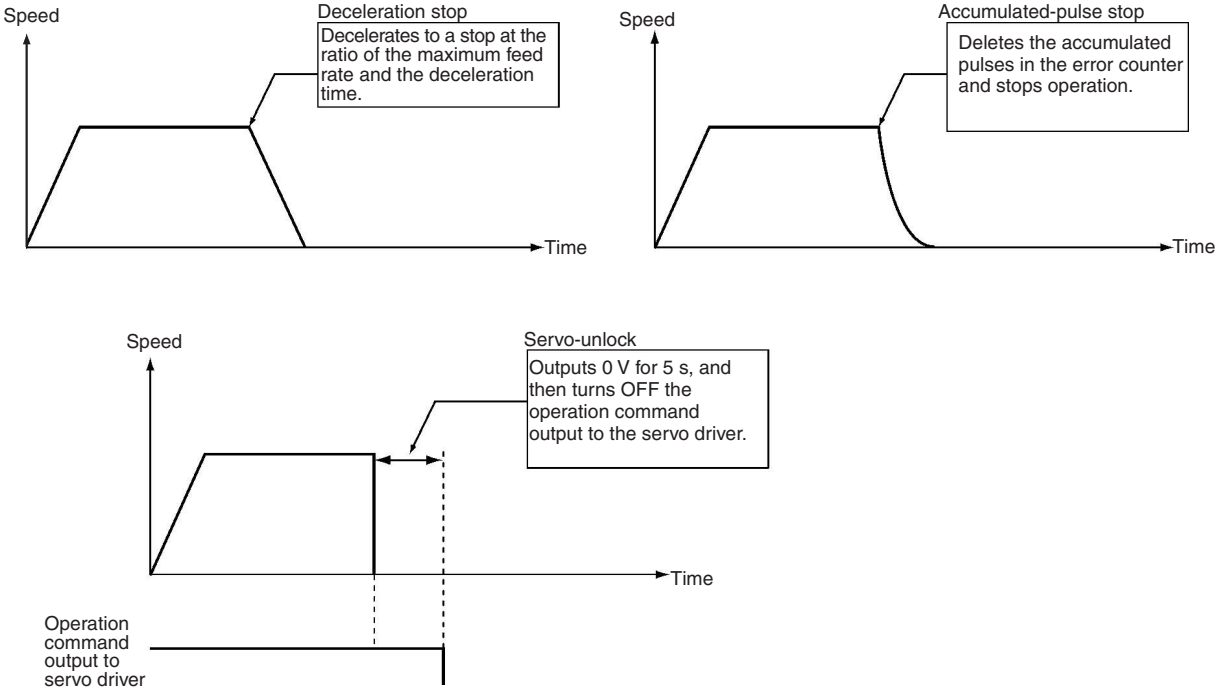

Feedback control is not performed while outputting 0 V and while waiting for the brake to turn ON after outputting 0 V. It is thus possible that the axis will be rotating. (Feedback control is performed while waiting for the brake to turn ON for a servo unlock command, and thus the axis will not rotate.)

6-21-1 Changes Made to the Driver Alarm Input Stop Method

The method used to stop the servomotor when an error occurs at the servo driver and a driver alarm input error (error code: 003C) is generated, has been changed in the following way. The change is effective for models with -E9 at the end of the lot number, and for models with lot numbers 991118 or later.

Specifications before Change

After the driver alarm input signal is received, brake output and RUN command output are turned OFF with the following timing. Brake output and RUN

command output will also be turned OFF when other errors that result in an emergency stop are generated.

Note When using models with the previous specifications, take appropriate countermeasures against dropping in the vertical axis.

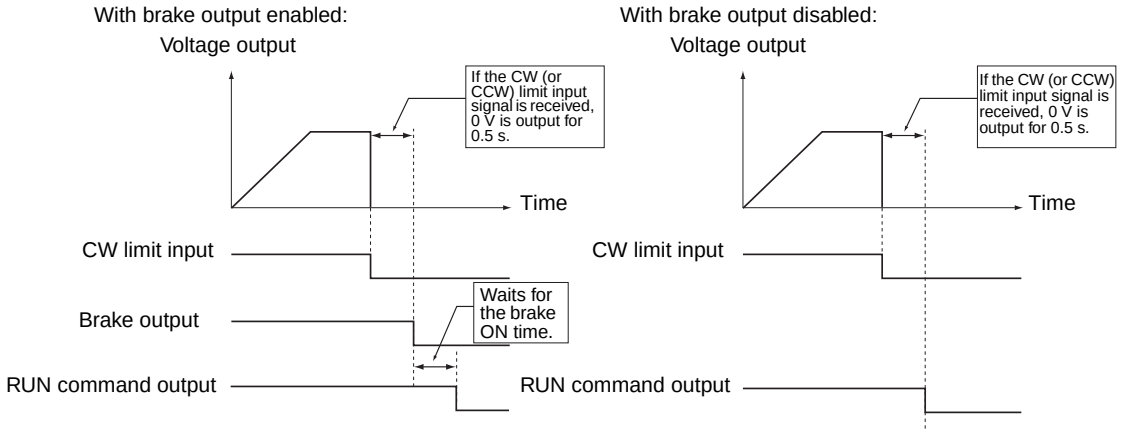

Specifications after Change

Brake output and RUN command output are turned OFF when the driver alarm input signal is received. (Operation when other errors that result in an emergency stop are generated will be the same as for previous models.)

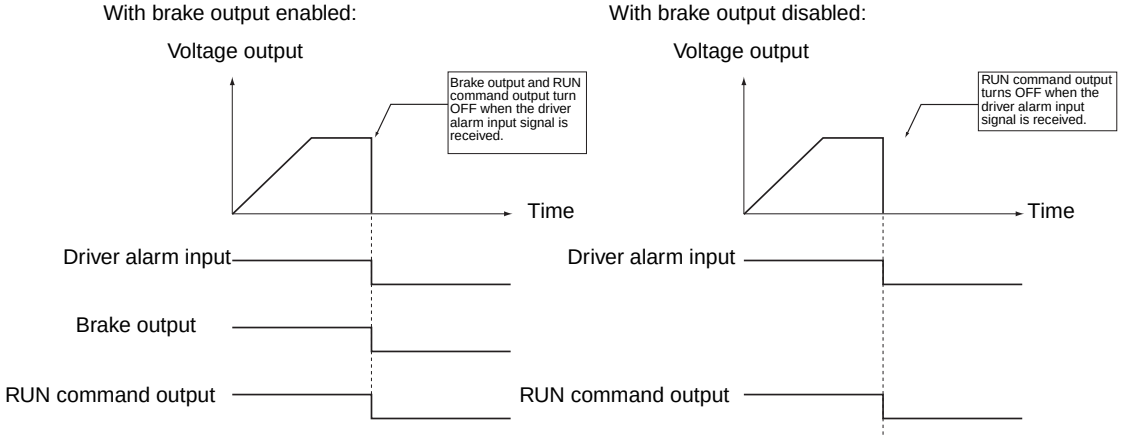

SECTION 7
G-language Programming

The section describes using the G language to program motion control in the MC Unit.

7-1 Programs and Tasks 376
7-1-1 Overview 376
7-2 G Language Overview 377
7-2-1 List of G-language Commands 377
7-2-2 G-language Formats 378
7-2-3 List of G Symbols 380
7-2-4 Declaring Program Numbers and Axes 382
7-2-5 Default Mode and Coordinate System 383
7-3 G-language Commands 384
7-3-1 G00: POSITIONING 384
7-3-2 G01: LINEAR INTERPOLATION 385
7-3-3 G02 and G03: CIRCULAR INTERPOLATION 388
7-3-4 G04: DWELL TIMER 395
7-3-5 G10: PASS MODE 396
7-3-6 G11: STOP MODE 398
7-3-7 G13: IN-POSITION CHECK OFF MODE 399
7-3-8 G17 to G22: CIRCULAR PLANE SPECIFICATION 400
7-3-9 G26: REFERENCE ORIGIN RETURN 402
7-3-10 G27: WORKPIECE ORIGIN RETURN 403
7-3-11 G28: ORIGIN SEARCH 404
7-3-12 G29: ORIGIN UNDEFINED 405
7-3-13 G30: SPEED CONTROL AXIS FEEDING 405
7-3-14 G31: INTERRUPT FEEDING 406
7-3-15 G32: TRAVERSE 412
7-3-16 G50: SELECT REFERENCE COORDINATE SYSTEM 416
7-3-17 G51: SELECT WORKPIECE COORDINATE SYSTEM 417
7-3-18 G53: CHANGE WORKPIECE ORIGIN OFFSET 418
7-3-19 G54: CHANGE REFERENCE COORDINATE SYSTEM PV 419
7-3-20 G60: ARITHMETIC OPERATIONS 420
7-3-21 G63: SUBSTITUTION 421
7-3-22 G69: CHANGE PARAMETER 421
7-3-23 G70: UNCONDITIONAL JUMP 423
7-3-24 G71: CONDITIONAL JUMP 424
7-3-25 G72: SUBROUTINE JUMP 424
7-3-26 G73: SUBROUTINE END 425
7-3-27 G74: OPTIONAL END 425
7-3-28 G75: OPTIONAL SKIP 427
7-3-29 G76: OPTIONAL PROGRAM PAUSE 428
7-3-30 G79: PROGRAM END 429
7-3-31 G90: ABSOLUTE SPECIFICATION 430
7-3-32 G91: INCREMENTAL SPECIFICATION 430
7-4 M Code Outputs 431
7-4-1 Introduction 431
7-4-2 M Code Data 433
7-4-3 M Code Examples 433
7-4-4 Effect of Mode Changes on M Code Resets 433
7-4-5 Clearing M000 to M499 with Forced Block End or G74 433
7-4-6 Clearing M500 to M999 with Forced Block End or G74 435
7-4-7 M Code Outputs in Pass Mode 436
7-4-8 Stopover Function and Resetting M Codes 437
7-4-9 D Code Outputs 438
7-4-10 Stopover Function 440
7-4-11 Precautions on the Stopover Function 443

7-1 Programs and Tasks

7-1-1 Overview

The CS1W-MC421 MC Unit can execute up to four tasks (tasks 1 to 4), and the CS1W-MC221 can execute one or two (tasks 1 to 2). (A task is a unit of execution for a program.)

By executing two or four tasks at the same time, the MC Unit can perform the same functions as two or four controllers.

The number of tasks and axes to be used are set in advance using CX-Motion for the unit parameters.

Number of Tasks and Axes

The X and Y axes can be used with the CS1W-MC221, and the X, Y, Z, and U axes can be used with the CS1W-MC421. Each axis can be used for only one task, i.e., any axis assigned to one task cannot be used in another task.

Example: 4 Tasks and 4 Axes

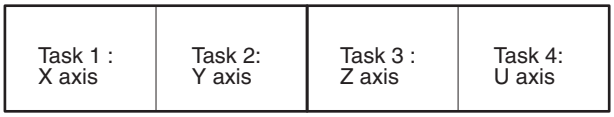

Example 2: 2 Tasks and 3 Axes



Example 3: 2 Tasks and 4 Axes



Example 4: 1 Task and 2 Axes

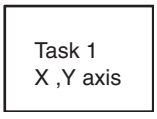

Tasks and Blocks

The MC Unit is capable of storing a total of 2,000 blocks of program. The maximum number of blocks that can be executed in each task depends on the number of tasks as shown in the following table. These figures include subroutines.

Number of tasks	Maximum number of blocks (CS1W-MC421)	Maximum number of blocks (CS1W-MC221)
1	2,000 blocks	2,000 blocks
2	1,000 blocks/task	1,000 blocks/task
3	666 blocks/task	---
4	500 blocks/task	---

Note A maximum of 800 blocks can be used in one program, including subroutines.

Tasks and Programs

A maximum of 100 programs can be managed by the MC Unit. The number of programs that can be managed per task depends on the number of tasks as shown in the following table. These figures include subroutines.

Number of tasks	Maximum number of programs (CS1W-MC421)	Maximum number of programs (CS1W-MC221)
1	100 programs	100 programs
2	50 programs/task	50 programs/task
3	33 programs/task	---
4	25 programs/task	---

Note The same program number cannot be used for different tasks.

7-2 G Language Overview

7-2-1 List of G-language Commands

Code	Name	Function	Page
G00	POSITIONING	Positions up to two or four axes simultaneously with PTP control at the maximum feed rate.	384
G01	LINEAR INTERPOLATION	Performs linear interpolation on up to two or four axes simultaneously at the specified interpolation feed rate.	385
G02	CIRCULAR INTERPOLATION (CLOCKWISE)	Performs 2-axis circular interpolation in the clockwise direction at the specified interpolation feed rate.	388
G03	CIRCULAR INTERPOLATION (COUNTER-CLOCKWISE)	Performs 2-axis circular interpolation in the counterclockwise direction at the specified interpolation feed rate.	
G04	DWELL TIMER	Waits for the specified period of time.	395
G10	PASS MODE	Performs operations one-by-one in sequence without deceleration to stop.	396
G11	STOP MODE	Performs the next operation after completing positioning.	398
G13	IN-POSITION CHECK OFF MODE	Starts the next operation without waiting for positioning to be completed.	399
G17	CIRCULAR PLANE SPECIFICATION (X-Y)	Sets the X-Y plane as the plane for circular interpolation.	400
G18 (See note.)	CIRCULAR PLANE SPECIFICATION (X-Z)	Sets the X-Z plane as the plane for circular interpolation.	400
G19 (See note.)	CIRCULAR PLANE SPECIFICATION (Y-Z)	Sets the Y-Z plane as the plane for circular interpolation.	400
G20 (See note.)	CIRCULAR PLANE SPECIFICATION (X-U)	Sets the X-U plane as the plane for circular interpolation.	400
G21 (See note.)	CIRCULAR PLANE SPECIFICATION (Y-U)	Sets the Y-U plane as the plane for circular interpolation.	400
G22 (See note.)	CIRCULAR PLANE SPECIFICATION (Z-U)	Sets the Z-U plane as the plane for circular interpolation.	400
G26	REFERENCE ORIGIN RETURN	Moves to the reference origin.	402
G27	WORKPIECE ORIGIN RETURN	Moves to the workpiece origin.	403
G28	ORIGIN SEARCH	Performs an origin search in the specified axis.	404
G29	ORIGIN UNDEFINED	Makes the origin undefined.	405

Code	Name	Function	Page
G30	SPEED CONTROL	Feeds up to two or four axes simultaneously at a controlled speed.	405
G31	INTERRUPT FEEDING	Performs interrupt feeding operations.	406
G32	TRAVERSE	Executes traverse operations.	412
G50	SELECT REFERENCE COORDINATE SYSTEM	Specifies the reference coordinate system.	416
G51	SELECT WORKPIECE COORDINATE SYSTEM	Specifies the workpiece coordinate system.	417
G53	CHANGE WORKPIECE ORIGIN OFFSET	Changes the origin of the workpiece coordinate system.	418
G54	CHANGE REFERENCE COORDINATE SYSTEM PV	Changes the present value in the reference coordinate system.	419
G60	ARITHMETIC OPERATIONS	Performs arithmetic operations on numerical values, position data, and registers.	420
G63	SUBSTITUTION	Substitutes numerical values, position data, or registers into other position data or registers.	421
G69	CHANGE PARAMETER	Changes the specified parameter.	421
G70	UNCONDITIONAL JUMP	Unconditionally jumps to the specified block.	423
G71	CONDITIONAL JUMP	Jumps to the specified block when the condition is met.	424
G72	SUBROUTINE JUMP	Calls the specified subroutine.	424
G73	SUBROUTINE END	Ends the subroutine.	425
G74	OPTIONAL END	Ends the block currently being executed when the specified optional input is ON.	425
G75	OPTIONAL SKIP	Skips the block after this command when the specified optional input is ON.	427
G76	OPTIONAL PROGRAM PAUSE	Pauses the program when the specified optional input is ON.	428
G79	PROGRAM END	Ends the main program.	429
G90	ABSOLUTE SPECIFICATION	Specifies the use of absolute coordinates in axis operations.	430
G91	INCREMENTAL SPECIFICATION	Specifies the use of relative coordinates in axis operations.	430

Note Not supported by the CS1W-MC221.

7-2-2 G-language Formats

The following notion is used for the operands.

< >	Name of an operand to be specified
[ ]	Optional operand
...	An operand that can be specified more than once
□	A required space
_	Optional space

Name	Code	Operands
POSITIONING	G00	<Axis movement command ...> [_M<M code>[/Stopover (Note 2.)]] [_D<D code>[/Stopover (Note 2.)]] [_#<optional number>]
LINEAR INTERPOLATION	G01	<Axis movement command ... >[_F<speed reference>[/Stopover (Note 2.)]] [_M<M code>[/Stopover (Note 2.)]] [_D<D code>[/Stopover (Note 2.)]] [_#<optional number>]

Name	Code	Operands
CIRCULAR INTERPOLATION (CLOCKWISE)T	G02	[<Axis movement command ... >]_<I to H center coordinate ...> [_F<speed reference>] [_M<M code>[/Stopover (Note 2.)]] [_D<D code>[/Stopover (Note 2.)]] [_L<number of turns>][_#<optional number>] [<Axis movement command ... >]_<R radius> [_F<speed reference>] [_M<M code>[/Stopover (Note 2.)]] [_D<D code>[/Stopover (Note 2.)]] [_L<number of turns>] [_#<optional number>]
CIRCULAR INTERPOLATION (COUNTERCLOCKWISE)	G03	[<Axis movement command ... >]_<I to H center coordinate ...> [_F<speed reference>] [_M<M code>[/Stopover (Note 2.)]] [_D<D code>[/Stopover (Note 2.)]] [_L<number of turns>] [_#<optional number>] [<Axis movement command ... >]_<R radius> [_F<speed reference>] [_M<M code>[/Stopover (Note 2.)]] [_D<D code>[/Stopover (Note 2.)]] [_L<number of turns>] [_#<optional number>]
DWELL TIMER	G04	□<wait time>
PASS MODE	G10	---
STOP MODE	G11	---
IN-POSITION CHECK OFF MODE	G13	---
CIRCULAR PLANE SPECIFICATION (X-Y)	G17	---
CIRCULAR PLANE SPECIFICATION (X-Z) (See note.)	G18	---
CIRCULAR PLANE SPECIFICATION (Y-Z) (See note.)	G19	---
CIRCULAR PLANE SPECIFICATION (X-U) (See note.)	G20	---
CIRCULAR PLANE SPECIFICATION (Y-U) (See note.)	G21	---
CIRCULAR PLANE SPECIFICATION (Z-U) (See note.)	G22	---
REFERENCE ORIGIN RETURN	G26	<Axis name ... > [_M<M code>[/Stopover (Note 2.)]] [_D<D code>[/Stopover (Note 2.)]]
WORKPIECE ORIGIN RETURN	G27	<Axis name ... > [_M<M code>[/Stopover (Note 2.)]] [_D<D code>[/Stopover (Note 2.)]]
ORIGIN SEARCH	G28	<Axis name ... > [_M<M code>[/Stopover (Note 2.)]] [_D<D code>[/Stopover (Note 2.)]]
ORIGIN UNDEFINED	G29	<Axis name ...>
SPEED CONTROL	G30	<Axis movement command>

Name	Code	Operands
INTERRUPT FEEDING	G31	<Axis movement command> _F <Speed Reference 1> <Axis name> <Coordinate 1>[/<Coordinate 2] [_F <Speed Reference 2>] [_M<M code>[/Stopover (Note 2.)]] [_D<D code>[/Stopover (Note 2.)]] [_S]
SELECT REFERENCE COORDINATE SYSTEM	G50	---
SELECT WORKPIECE COORDINATE SYSTEM	G51	---
CHANGE WORKPIECE ORIGIN OFFSET	G53	<Offset value ... >
CHANGE REFERENCE COORDINATE SYSTEM PV	G54	<Present value ... >
ARITHMETIC OPERATIONS	G60	<First term = Second term Operator Third term>
SUBSTITUTION	G63	<First term = Second term>
CHANGE PARAMETER	G69	<#System parameter type>/<New setting ... >
UNCONDITIONAL JUMP	G70	<Jump destination block number> [/L<Number of loops>]
CONDITIONAL JUMP	G71	<Jump destination block number>/<condition equation>
SUBROUTINE JUMP	G72	<subroutine number>
SUBROUTINE END	G73	---
OPTIONAL END	G74	□<Optional number>
OPTIONAL SKIP	G75	□<Optional number>
OPTIONAL PROGRAM STOP	G76	□<Optional number>
PROGRAM END	G79	---
ABSOLUTE SPECIFICATION	G90	---
INCREMENTAL SPECIFICATION	G91	---

Note
1. Not supported by the CS1W-MC221.
2. The stopover function can be used with either an M code or a D code, but not with both.

7-2-3 List of G Symbols

The following table lists the symbols used in G-language programming.

Symbol	Meaning
A	Indicates a position data address. There are 2000 addresses ranging from A0000 to A1999.
D	D code
E	Indicates a register. There are 32 registers ranging from E00 to E31.
F	Indicates the speed when performing interpolation operations.
G	G command
H (See note.)	Arc center coordinate for the U-axis.
I	Arc center coordinate for the X-axis.
J	Arc center coordinate for the Y-axis.
K (See note.)	Arc center coordinate for the Z-axis.
L	Number of loops
M	M code
N	Block number
O	Specifies the end processing method for G32 winding.
P	Program number

Symbol	Meaning
R	Circle radius
S	Specifies no error when there is no G31 interrupt input.
U (See note.)	U-axis
X	X-axis
Y	Y-axis
Z (See note.)	Z-axis
/	Separator
( )	Indirect specification
#	Optional number, system parameter type
*	Comment

Note Not supported by the CS1W-MC221.

Specifying Position Data Addresses (A0000 to A1999)

It is possible to use the contents of a position data address for position data or an M code by specifying that address in an operand in an axis movement command or M code. For example, when the following program is executed, the contents of A1000 (123.45) will be used for the X-axis data and the contents of A1001 (50) will be used for the M code.

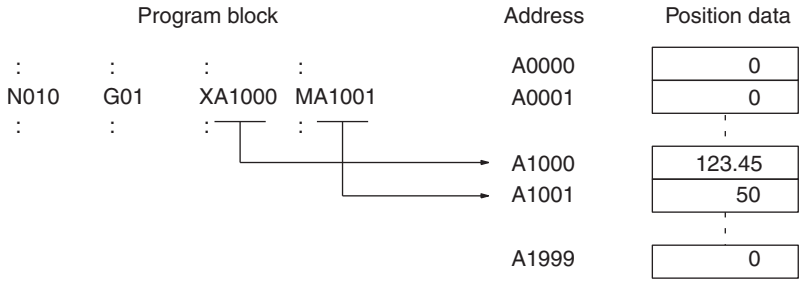

Specifying Registers (E00) to (E31)

Position data can be specified indirectly by specifying a register (E00) to (E31) in an axis movement command or M code. The relationship between the register and position data contents is shown below.

Register		Position data	
E00	1000	A1000:	123.35
E01	1001	A1001:	50

Registers and position data are not assigned together to each task; they can be used independently for different tasks.

The contents of registers are all cleared to zero only when power is turned ON or when a restart is executed. Initialize register contents at the beginning of the program by executing an command such as the SUBSTITUTION command (G63). Registers can contain values from 0 through 1999. An error will occur if a value greater than 1999 is input in a register. The possible range of values for position data is –39,999,999 through 39,999,999.

Indirect Addressing of Position Data

If the register name is in parentheses, i.e. (E00), the content of register will be treated as a position data address.

For example, when the following program is executed, the contents of A1000 (123.45) will be used for the X-axis data and the contents of A1001 (50) will be used for the M code.

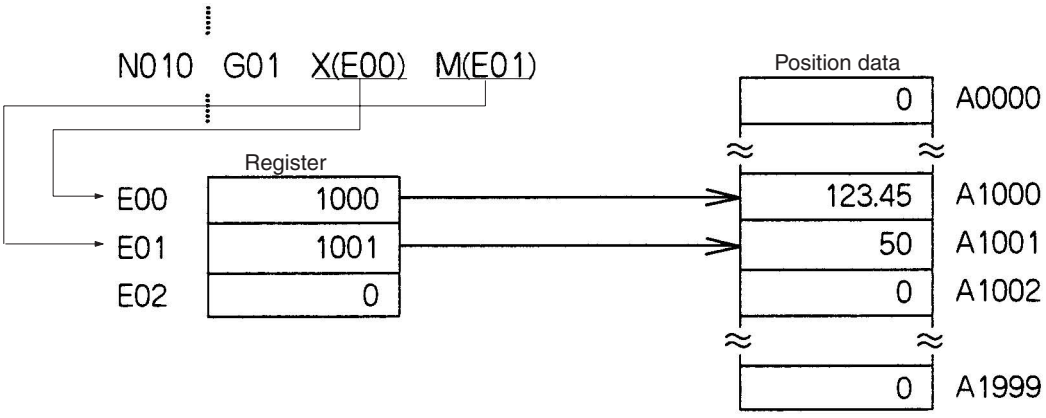

Direct Addressing of Registers

If the register name is not in parentheses, i.e. E00, the command will operate directly on the content that register. In the following example, the content of E00 and E01 are added and the result is placed in E02.

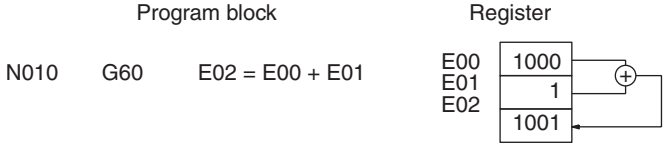

7-2-4 Declaring Program Numbers and Axes

The program number and axes being used must be declared at the beginning of the program.

Format

<program number_axes...>

Operands

The following table shows the program numbers and axes that can be declared for main programs and subroutines.

Programs	Program numbers	Axes
Main programs	P000 through P499	X, Y, Z, U
Subroutines	P500 through P999	

Usage

There are two kinds of MC Unit programs, main programs and subroutines. Main programs are assigned program numbers P000 through P499 and subroutines are assigned program numbers P500 through P999.

Every program must begin with a declaration of the program number and the axes being used. Main programs end with a PROGRAM END command (G79) and subroutines end with a SUBROUTINE END command (G73). This declaration is made at the beginning of the program (block number N000); an error (determined by CX-Motion) will occur if the declaration is made in a later block.

The MC Unit can contain up to 100 programs.

Programming Examples

Use the following format for main programs.

```
N000   P100    XY
       :       :
       :       :
N100   G79                  PROGRAM END command
```

Use the following format for subroutines.

```
N000   P510    XY
       :       :
       :       :
N100   G73                  SUBROUTINE END command
```

When executing the main program from the first block, make initial settings such as the following.

1,2,3...

1. Restore the acceleration/deceleration time, interpolation acceleration/deceleration time, and workpiece origin offset value to the system parameter values.
2. Set the operating mode to Pass Mode.
3. Set the coordinate system to the reference coordinate system.
4. Set the command method to absolute.

7-2-5 Default Mode and Coordinate System

Various modes and coordinate systems can be used when a G-language program is executed. The following table shows the default settings for these.

The following defaults will always be set before executing the first block of a G-language main program.

Coordinate system or mode		General description	Page
Coordinate system	Reference coordinate system (Default setting)	Axis positions on the reference coordinate system are used.	416
	Workpiece coordinate system	Axis positions on the workpiece coordinate system are used.	417
Command Mode	Absolute specification (Default setting)	Absolute coordinates are used in axis operations.	430
	Incremental specification	Relative coordinates are used in axis operations.	430
Operating Mode	Stop Mode	For interpolation operations, the next operation is performed only after positioning is completed.	398
	Pass Mode (Default setting)	For interpolation operations, operations are performed sequentially without decelerating to a stop between them.	396
	In-position Check OFF Mode	For interpolation operations, the next operation is performed without waiting for positioning to be completed.	399

7-3 G-language Commands

This section provides detailed descriptions of the G-language commands. Command formats, operands, and application are described and programming examples are provided. The command format shows the operands that can be used and shows the correct syntax using the following notation.

< >	Name of an operand to be specified
[ ]	Optional operand
...	An operand that can be specified more than once. For example, multiple coordinates can be specified like this: <X1000 Y500>
□	A required space
_	Optional space

The descriptions provided in this section are for the CS1W-MC421. The CS1W-MC221 supports only the X and Y axes.

7-3-1 G00: POSITIONING

Positions up to four axes simultaneously with PTP control at the high-speed feed rate.

Format

G00_<Axis movement command ...> [_M<M code>[/Stopover (Note.)]]
[_D<D code>[/Stopover (Note.)]]
[_#<optional number>]

Note The stopover function can be used with either an M code or a D code, but not with both.

Operands

The following table shows the possible settings for the operands.

Operand		Possible settings
Axis movement command	Axes	X, Y, Z, U
	Coordinate data	–39,999,999 to +39,999,999 (E00) to (E31) A0000 to A1999 + or –
M code		000 to 999 (E00) to (E31) A0000 to A1999
D code		000(0) to 255 (E00) to (E31) A0000 to A1999
Stopover	Axes	X, Y, Z, U
	Position data	0 to 39999999 (E00) to (E31) A0000 to A1999
Optional number		00 to 19

Note Refer to *7-4 M Code Outputs* for details on M codes, and to *7-4-9 D Code Outputs* for details on D codes. Refer to *7-4-10 Stopover Function* for details on the stopover function.

Description

Positions up to four axes simultaneously with PTP control according to the maximum feed rate, acceleration/deceleration time, and acceleration/deceleration curve settings in the system parameters. The override is valid.

When "+" or "–" is specified for the coordinate data, positioning will be performed to the software limit in the specified direction.

Control is passed on to the next block after all of the specified axes reach their in-position ranges.

When an optional number is specified, the axis movement command will be carried out when that optional input goes ON. The operation will not be performed until the optional input goes ON. The source of the optional input depends on the optional number specified, as shown below.

0 through 15: Inputs from the PLC Interface Area
16 through 19: Inputs from general inputs 1 to 4

Programming Examples

The following example shows absolute positioning.

```
        :       :
N010    G90                     Absolute specification
N011    G00     X100 Y50  M001
        :       :
```

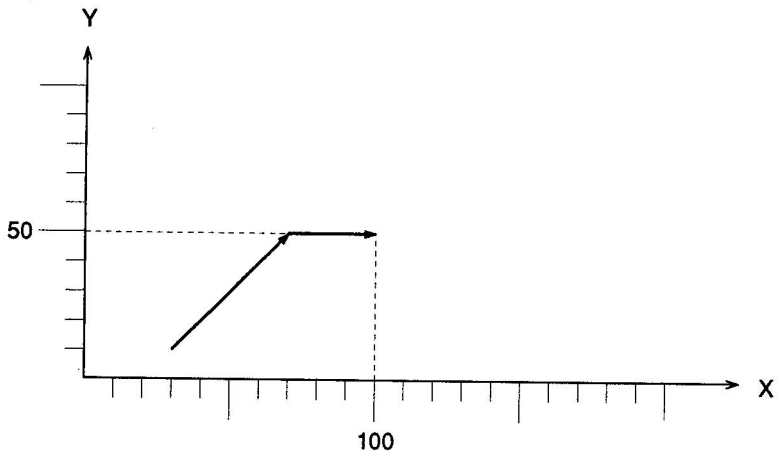

The following program is for incremental operation.

```
        :       :
N010    G91                     Incremental specification
N011    G00     X100 Y50  M001
        :       :
```

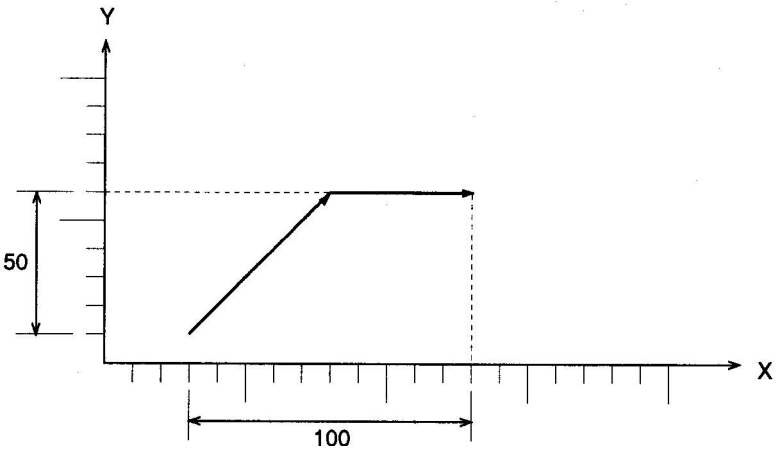

Note The X and Y axes are operated at the same speed in the above examples.

7-3-2 G01: LINEAR INTERPOLATION

Performs linear interpolation on up to 4 axes simultaneously at the specified interpolation feed rate.

Format

G01_<Axis movement command ...>[_F<speed reference>]
[_M<M code>[/Stopover (Note.)]]

[_D<D code>[/Stopover (Note.)]]
[_#<optional number>]

Note The stopover function can be used with either an M code or a D code, but not with both.

Operands

The following table shows the possible settings for the operands.

Operand		Possible settings
Axis movement command	Axes	X, Y, Z, U
	Coordinate data	–39,999,999 to +39,999,999 (E00) to (E31) A0000 to A1999
Speed reference		0.0001 to 39,999,999 (E00) to (E31) A0000 to A1999
M code		000 to 999 (E00) to (E31) A0000 to A1999
D code		000 (0) to 255 (E00) to (E31) A0000 to A1999
Stopover	Axes	X, Y, Z, U
	Coordinate data	0 to 39999999 (E00) to (E31) A0000 to A1999
Optional number		00 to 19

Note Refer to *7-4 M Code Outputs* for details on M codes, and to *7-4-9 D Code Outputs* for details on D codes. Refer to *7-4-10 Stopover Function* for details on the stopover function.

Description

Performs linear interpolation on up to four axes simultaneously at the specified interpolation feed rate.

The interpolation feed rate is calculated with the equations shown below. Four axes are shown, but the same calculations apply when three or fewer axes are being used.

$Fx = F \times dLx/L$
$Fy = F \times dLy/L$
$Fz = F \times dLz/L$
$Fu = F \times dLu/L$

Fx to Fu: Interpolation feed rates for axes X to U
dLx to dLu: Movement distance for axes X to U
L: Total distance between start and end of linear interpolation

$$\left(L = \sqrt{dLx^2 + dLy^2 + dLz^2 + dLu^2}\right)$$

If the interpolation feed rate is not specified, the interpolation will be performed at the last feed rate used in a G01, G02, or G03 command. An error will occur if the interpolation feed rate is not specified and the G01, G02, or G03 command has not been executed before.

⚠ **Caution** When linear interpolation is performed in Pass Mode and an M code from 0 through 499 or an optional number is specified, the interpolation will be performed in Stop Mode, not Pass Mode. For details on the Pass Mode, refer to *7-3-5 G10: PASS MODE*.

If the same interpolation acceleration/deceleration times and override values are not set for all of the axes used in a task, the settings for the axis with the

highest priority will be used. Axis X has the highest priority, followed by Y, Z, and U.

The override value can be specified from the Teaching Box or PLC Interface Area.

Declared axis configuration for task	Interpolation deceleration time and override value
XYZU	X-axis time and value
YZU	Y-axis time and value
ZU	Z-axis time and value
U	U-axis time and value
XU	X-axis time and value

Refer to *6-8 Operating Modes* for details on interpolation acceleration and deceleration times in Pass Mode.

The override value is read only for the first G01 command in Pass Mode or In-Position Check OFF Mode.

When the product of the specified interpolation feed rate and override exceeds the maximum interpolation feed rate specified in system parameters for the axis being moved by linear interpolation, linear interpolation will be performed at the lowest maximum interpolation feed rate among the axes being moved.

Consider the following situation.

G01 X1000 Y1000 Z–1000 F3000
X-axis override value: 100.0 [%]
X-axis maximum interpolation feed rate: 4000 [mm/s]
Y-axis maximum interpolation feed rate: 3000 [mm/s]
Z-axis maximum interpolation feed rate: 2000 [mm/s]
Interpolation feed rate after override calculation =
3000 x 100.0/100.0 = 3000 [mm/s]

This exceeds the maximum interpolation feed rate for the Z axis. The feed rate in this case would be 2000 [mm/s].

When an optional number is specified, the axis movement command will be carried out when that optional input goes ON. The operation will not be performed until the optional input goes ON. The source of the optional input depends on the optional number specified, as shown below.

0 through 15: Inputs from the PLC Interface Area
16 through 19: Inputs from general inputs 1 to 4

Programming Examples

The following example shows absolute positioning.

```
        :       :
N010    G90                     Absolute specification
```

```
N011   G01     X100 Y50  F300
       :       :
```

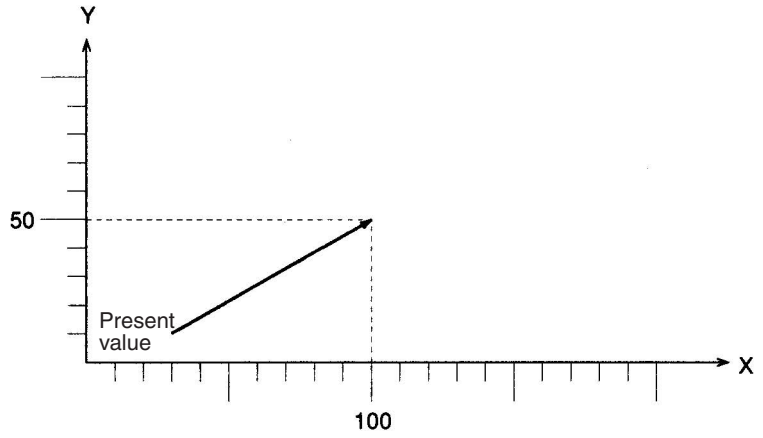

The following program is for incremental operation.

```
       :       :
N010   G91                      Incremental specification
N011   G01     X100 Y50  F300
       :       :
```

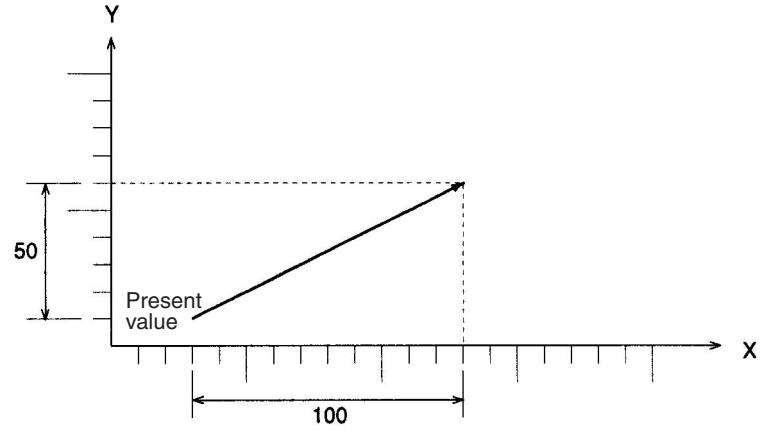

7-3-3 G02 and G03: CIRCULAR INTERPOLATION

Performs two-axis circular interpolation in the clockwise (G02) or counter-clockwise (G03) direction at the specified interpolation feed rate.

With the CS1W-MC421, it is also possible to perform 2-axis circular interpolation + 1-axis linear interpolation (helical circular interpolation) and 2-axis circular interpolation + 2-axis linear interpolation. In addition, the multiturn function can be added to either circular interpolation or helical circular interpolation for winding machine operations.

Format

G02 (G03)_[<Axis movement command ...>]_<center coordinate ...>
[_F<speed reference>]
[_M<M code>[/Stopover (Note.)]]
[_D<D code>[/Stopover (Note.)]]
[_L<number of turns>]
[_#<optional number>]

G02 (G03)_<Axis movement command ...>_<R radius>
[_F<speed reference>]
[_M<M code>[/Stopover (Note.)]]
[_D<D code>[/Stopover (Note.)]]
[_L<number of turns>]
[_#<optional number>]

Note The X and Y axes are operated at the same speed in the above examples.

Examples

Example 1) G02 X100 Y90 I0 J40 F300 (Center specification)
Example 2) G02 X100 Y90 R120 F300 (Radius specification)
Example 3) G02 X200 Y200 Z200 I0 J0 F200 L10 (Helical circular)

Operands

The following table shows the possible settings for the operands.

Operand		Possible settings
Axis movement command	Axes	X, Y, Z, U
	Coordinate data	–39,999,999 to +39,999,999 (E00) to (E31) A0000 to A1999
Center coordinate	Axes	I, J, K, H
	Radius	R
	Coordinate and radius data	–39,999,999 to +39,999,999 (E00) to (E31) A0000 to A1999
Speed reference		0.0001 to 39,999,999 (E00) to (E31) A0000 to A1999
M code		000(0) to 999 (E00) to (E31) A0000 to A1999
D code		000(0) to 255 (E00) to (E31) A0000 to A1999
Stopover	Axes	X, Y, Z, U
	Coordinate data	0 to 39,999,999 (E00) to (E31) A0000 to A1999
Number of turns		0 to 39,999,999 A0000 to A1999 (E00) to (E31)
Optional number		00 to 19

I, J, K, and H are the center coordinates (relative position) for the X, Y, Z, and U axes respectively.

Note Refer to *7-4 M Code Outputs* for details on M codes, and to *7-4-9 D Code Outputs* for details on D codes. Refer to *7-4-10 Stopover Function* for details on the stopover function.

Operation

This command is used to position two axes by circular interpolation, two axes by circular interpolation and one axis by linear interpolation, or two axes by circular interpolation and two axes by linear interpolation at the specified feed rate. Positioning two axes by circular interpolation and one axis by linear interpolation is referred to as helical circular interpolation. Axes that are not being moved by circular interpolation are called supplemental axes.

Axes that are being moved by circular interpolation are determined by CIRCULAR PLANE SPECIFICATION commands (G17 to G22).

With axes specified as the circular plane, the present position of an axis with no axis run command will be treated as the target position. Other axes will not be moved unless axis movements are specified for them.

If the interpolation feed rate is not specified, circulation interpolation will be performed at the last interpolation feed rate specified for G01, G02 and G03. An error will occur if an interpolation feed rate is not specified when G02 or G03 is first executed.

An error will occur if circular plane is not specified prior to executing circular interpolation.

The axis with the highest priority must be the horizontal axis. The following diagrams show the order of priority.

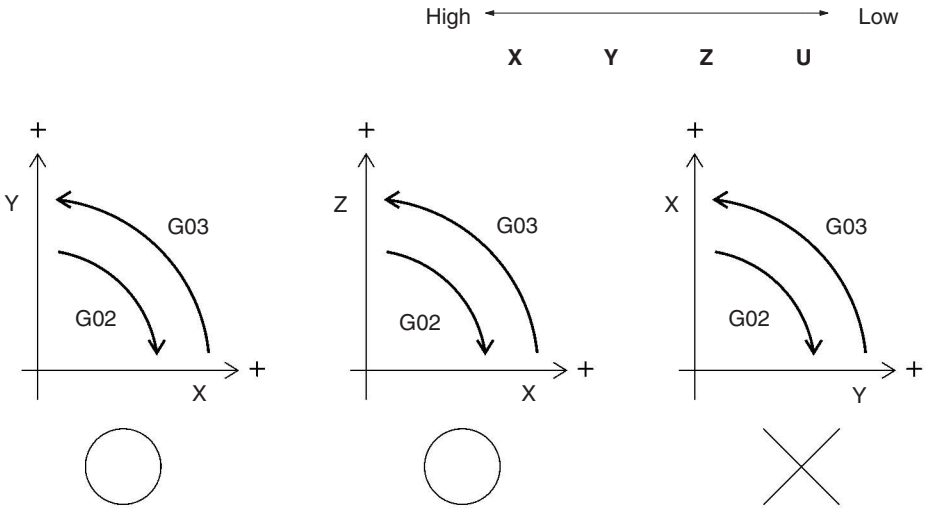

If an axis that is not defined as the circular plane is specified, that axis will move by linear interpolation, and the speed of the supplemental axis will be as follows:

$$Fi = F \times dLi/Lc$$

Fi: Supplemental axis interpolation feed rate
F: Speed reference
dLi: Supplemental axis travel distance
Lc: Circumferential length

An error will occur if the interpolation feed rate of the supplemental axis exceeds the maximum interpolation feed rate set for the axis.

When specifying the circle's center coordinate, specify the relative distance from the present position (the circle's starting point) and specify one or two axes. An error will occur if nothing is specified or if three or more axes are specified.

When specifying the radius, circular interpolation smaller than a semicircle will be executed for a positive value and circular interpolation greater than a semicircle will be executed for a negative value. Either a negative or positive value can be specified for a semicircle.

When specifying a complete circle (360°), the system will operate when either of the following conditions is met in the center coordinate specifications.

- When the axis movement command and present position are the same
- When the axis movement command is omitted

A complete circle cannot be drawn using the radius specification.

⚠ **Caution** When circular interpolation is performed in Pass Mode and an M code from 0 through 499 or an optional number is specified, the interpolation will be performed in Stop Mode, not Pass Mode. For details on the Pass Mode, refer to *7-3-5 G10: PASS MODE*.

The override value can be set from either the Teaching Box or the PLC Interface Area.

The order of priority is as follows:



Declared axis configuration for task	Interpolation deceleration time and override value
XYZU	X-axis time and value
YZU	Y-axis time and value
ZU	Z-axis time and value
U	U-axis time and value
XU	X-axis time and value

In Pass Mode or In-Position Check OFF Mode, the override value is read only for the first G02/G03 command.

When the product of the specified interpolation feed rate and override value exceeds the maximum interpolation feed rate for the axis being moved by circular interpolation (set in the system parameters), circular interpolation will be performed at the lowest maximum feed rate among the axes being moved. For example, consider the following situation.

```
G02    X100    Y90     I0      J40     F3000
```

X-axis override value: 100.0[%]
X-axis max. interpolation feed rate: 4000[mm/s]
Y-axis max. interpolation feed rate: 2000[mm/s]

Interpolation feed rate after override calculation = 3000 × 100.0/100.0
= 3000 [mm/s]

The interpolation feed rate exceeds the maximum interpolation feed rate for the Y-axis (2000 [mm/s]), so the interpolation feed rate is set to 2000 [mm/s].

Note Internal radius calculations are accurate to seven digits. When the radius exceeds 9,999,999 pulses, circular interpolation will be performed within the specified circle. Keep the radius under 9,999,999 pulses when specifying the radius in 1-pulse units.

If the plane where circular interpolation will be performed is changed while consecutive circular interpolations are being executed, pause the positioning before going on to the next circular interpolation when Pass Mode is specified.

When an optional number is specified, the axis movement command will be carried out when that optional input goes ON. The operation will not be performed until the optional input goes ON. The source of the optional input depends on the optional number specified, as shown below.

0 through 15: Inputs from the PLC Interface Area
16 through 19: Inputs from general inputs 1 to 4

Multiturn Function

The multiturn function was added to conventional circular and helical circular interpolations for the purpose of wiring machine operations.

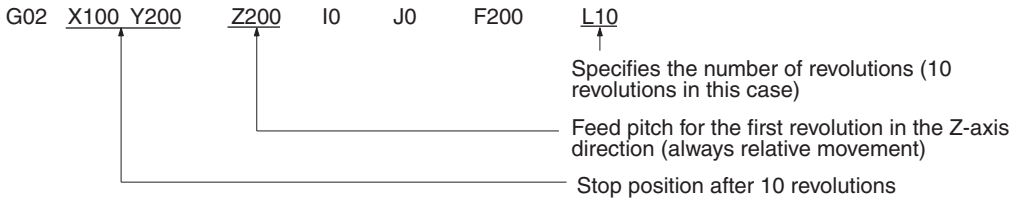

Note If the multiturn function is specified for a complete circle, the axis will move the number of turns plus one revolution.

Programming Examples

The following programming example shows circular interpolation with center coordinate specification.

```
        :       :
N010    G90                     Absolute specification
N011    G17                     Makes X-Y the circular plane.
N010    G02     X100 Y90  I0    J40  F300
        :       :
```

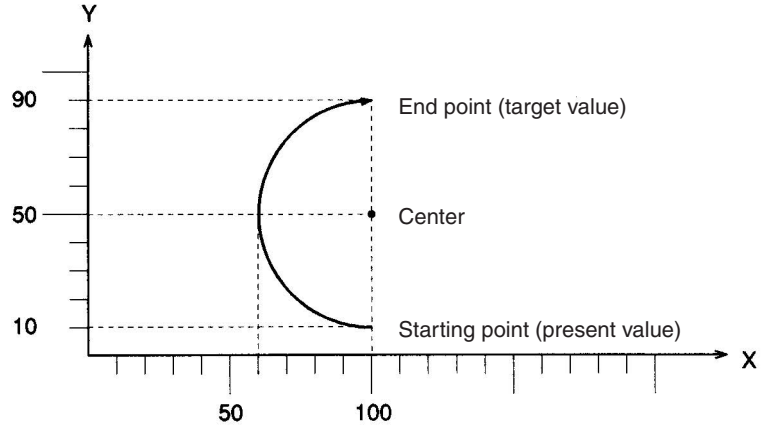

The following program shows circular interpolation with radius specification (R<0). An arc greater than a semicircle will be drawn when R<0.

```
        :       :
N010    G90                     Absolute specification
N011    G17                     Makes X-Y the circular plane.
N012    G02     X140 Y50  R-40  F300
        :       :
```

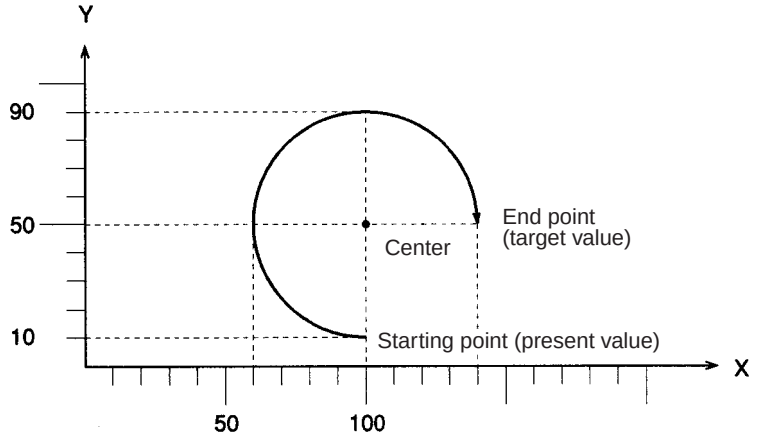

The following program shows circular interpolation with radius specification (R>0). An arc smaller than a semicircle will be drawn when R>0.

```
          :      :
N010      G91                    Incremental specification
N011      G17                    Makes X-Y the circular plane.
N012      G02    X40    Y40      R40    F300
          :      :
```

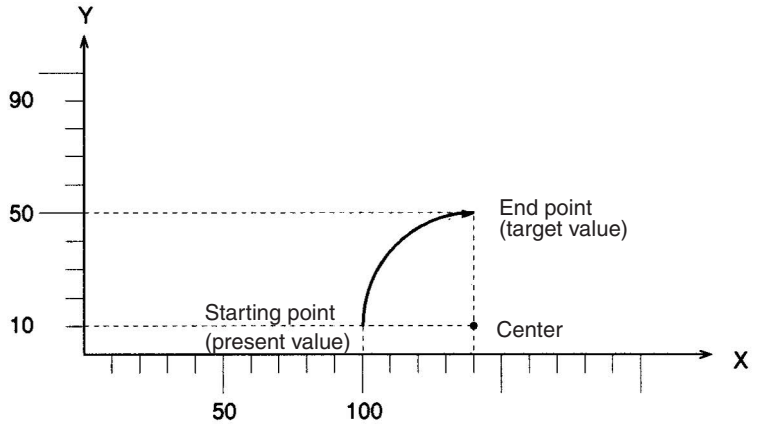

The following program shows circular interpolation of a complete circle.

```
          :      :
N010      G90                    Absolute specification
N011      G17                    Makes X-Y the circular plane.
N012      G02    X100 Y10  I0     J40   F500
          :      :
```

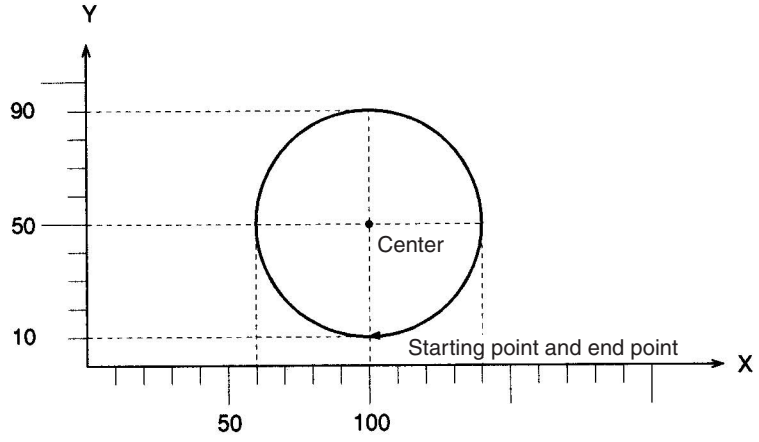

Helical Movement

```
        :       :
N010    G90                             Absolute specification
N011    G17                             X-Y circular plane specification
N012    G02     X50  Y100 Z20  I-30 J0   F500
        :       :
```

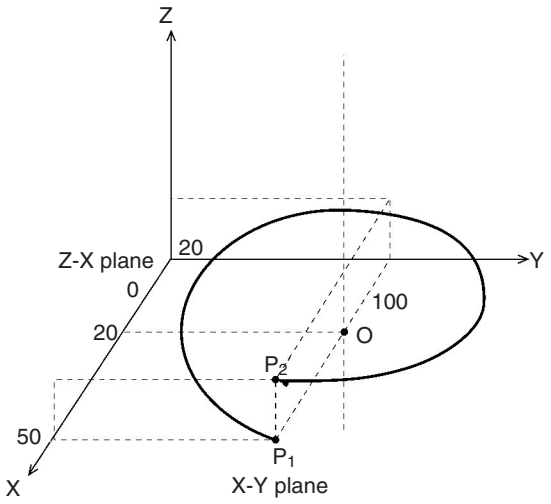

Start point coordinate P_1 (50, 100, 0)
End point coordinate P_2 (50, 100, 20)
Center coordinate O (20, 100, 0)

Helical Bundling Operation

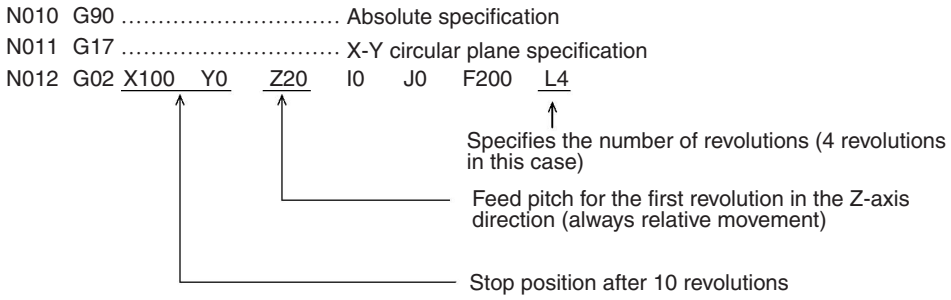

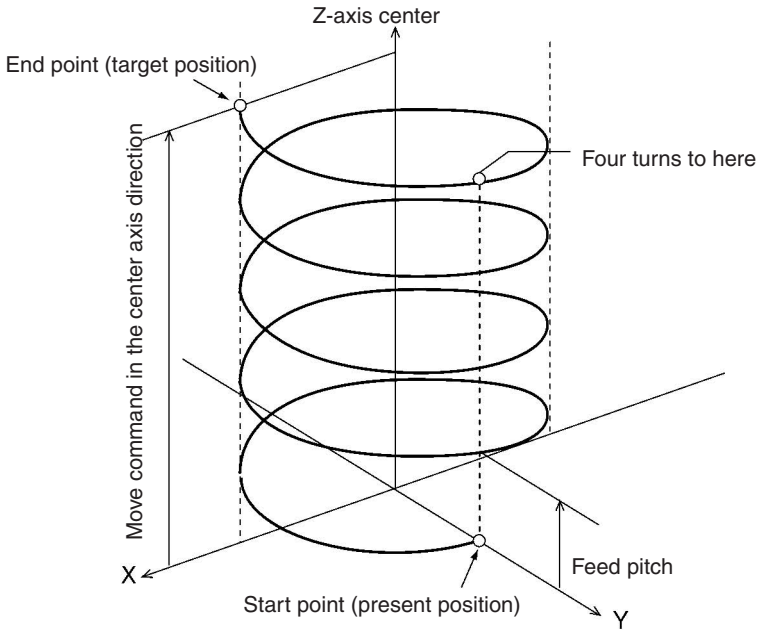

7-3-4 G04: DWELL TIMER

Waits for a specified length of time.

Format

G04□<wait time>

Operands

The following table shows the possible settings for the wait time operand.

Operand	Possible settings
Wait time	0.001 to 39,999.994 (E00) to (E31) A0000 to A1999

Description

This command waits for a specified wait time.

The wait time can be specified by a register or a position data address. If the memory contents have four or more digits below the decimal point, the fourth digit is rounded off. An error will occur if the resulting number is outside of the acceptable range (0.001 to 39,999.994).

Values from 0.001 to 39,999.999 [s] can be input for the wait time, but settings of 39,999.995 to 39,999.999 will cause an error. The accuracy of the timer is approximately 0.02 s. For example, setting “1” [s] will result in an actual wait of 1.00 to 1.02 seconds.

⚠ **Caution** If this command is executed just after a G01, G02, G03, or G32 command, the interpolation will be performed in Stop Mode, not Pass Mode, even if Pass Mode has been selected.

Programming Example

In this example, the dwell timer waits 10 seconds between linear interpolation operations.

```
      :     :
N009  G10
N010  G01   X100  F50
N011  G04   10
N012  G01   X200  Y200
      :     :
```

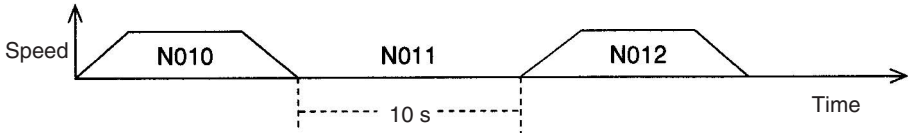

Note Program blocks N010 and N012 are not pass operations.

7-3-5 G10: PASS MODE

Switches the operating mode to Pass Mode.

Format

G10

Operands

None

Description

This command switches the operating mode to Pass Mode. When this command is executed, any subsequent interpolation (linear or circular) operation will move on to the next positioning operation without decelerating to a stop. The Pass Mode remains in effect until the STOP MODE command (G11) or IN-POSITION CHECK OFF MODE command (G13) is executed.

The pass operation may not be executed if a G01, G02, G03, or G32 command is executed with an extremely short travel time.

In Pass Mode, the next G-code command is executed (pre-read execution) without waiting for the completion of a G01, G02, G03, or G32 command that is currently being executed, so the execution block number output to the interface might be different from the actual block number being executed. The subsequent commands will be executed until the next block with a G01, G02, G03, or G32 command.

In the following programming example, blocks N003 to N006 are executed (pre-read execution) while the axis is moving according to the command in block N002. Although the axis is moving according to program block N002, the execution block number will be refreshed with block numbers N003 to N006. Program execution will then wait on standby at block N006.

When command processing for N002 is completed, pre-read execution will start again.

```
N000     P000  XY
N001     G10
N002     G01   X100  F1000
N003     G63   A0000 = 1
N004     G63   A0001 = 2
N005     G63   A0002 = 3
N006     G01   X200
         :     :
```

⚠ **Caution** The following commands will pause pre-reading and switch any axis that is moving to Stop Mode. (The axis will decelerate to a stop when positioning is completed, and an in-position check will be performed).

- G00 (PTP)
- G01, G02 and G03 commands with #optional numbers
- CIRCULAR INTERPOLATION commands (G02, G03) with different circular plane specifications than those for CIRCULAR PLANE SPECIFICATION commands (G17 to G22)
- Pass Mode operation between CIRCULAR INTERPOLATION commands (G02, G03) and TRAVERSE (G32) (which is not possible)
- G04 (DWELL TIMER)
- G26 (WORKPIECE ORIGIN RETURN)
- G27 (REFERENCE ORIGIN RETURN)
- G28 (ORIGIN SEARCH)
- G29 (ORIGIN UNDEFINED)
- G30 (SPEED CONTROL)
- G31 (INTERRUPT FEEDING)
- G54 (CHANGE REFERENCE COORDINATE SYSTEM PV)
- G79 (PROGRAM END)
- M000 to M999 independent commands
- D000 to D255

The following commands must be executed in Stop Mode. Pre-reading will be paused.

- G01, G02, G03, G32 commands with an M code from M000 to M499

Programming Example In this example, linear interpolation is executed with a pass operation.

```
      :     :
N010  G00   X30   Y30
N011  G10
N012  G01   X70
N013  G01   Y90
N014  G01   X120
N015  G00   Y30
N016  G00   X150
      :     :
```

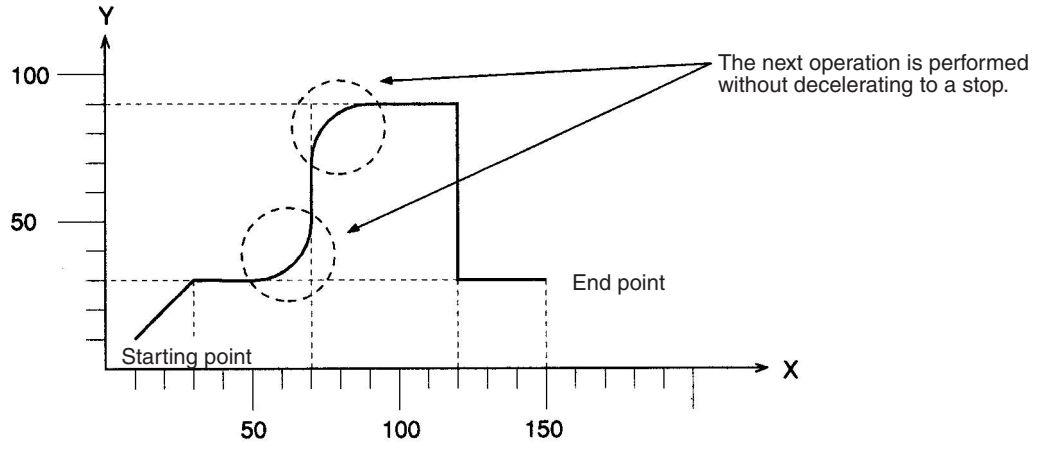

7-3-6 G11: STOP MODE

Switches the operating mode to Stop Mode.

Format

G11

Operands

None

Description

This command switches the operating mode to Stop Mode. If this command is executed, subsequent interpolation (linear or circular) commands will be decelerated to a stop at the end point, an in-position check will be performed, and then the next positioning operation will be performed after completion of the positioning is verified.

The Stop Mode will remain in effect until one of the following commands is executed:

1,2,3...

1. PASS MODE (G10)
2. IN-POSITION CHECK OFF MODE (G13)
3. REFERENCE ORIGIN RETURN (G26)
4. WORKPIECE ORIGIN RETURN (G27)
5. ORIGIN SEARCH (G28)

Note A reset will be performed and the operating mode will be switched to Pass Mode when a REFERENCE ORIGIN RETURN (G26), WORKPIECE ORIGIN RETURN (G27), or ORIGIN SEARCH (G28) command is executed.

Programming Example

The following programming example demonstrates positioning in Stop Mode. The mode is changed to Stop Mode after linear interpolation in Pass Mode. The Unit moves to the next operation after completion of the previous operation is confirmed.

```
          :     :
N009      G10
N010      G01   X200  F200
N011      G11
N012      G01   X300  F100
N013      G01   X400  F100
          :     :
```

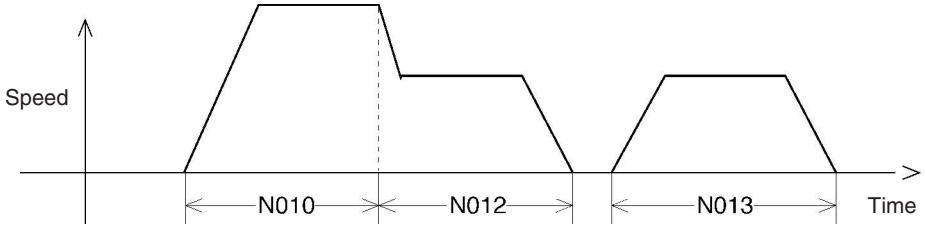

In Stop Mode, the Unit moves to the next operation after completion of the previous operation is verified.

7-3-7 G13: IN-POSITION CHECK OFF MODE

Starts the next positioning operation without waiting for the current one to be completed.

Format

G13

Operands

None

Description

In Stop Mode, the next positioning operation will start only after positioning is completed, but with the In-position Check OFF Mode, the next positioning operation will start without waiting for positioning to be completed.

The following G codes can be used in In-position Check OFF Mode.

- G01 (LINEAR INTERPOLATION)
- G02/G03 (CIRCULAR INTERPOLATION)
- G32 (TRAVERSE)

The In-position Check OFF Mode remains in effect until one of the following is executed.

- PASS MODE (G10)
- STOP MODE (G11)
- REFERENCE ORIGIN RETURN (G26)
- WORKPIECE ORIGIN RETURN (G27)
- ORIGIN SEARCH (G28)

The following commands will pause pre-reading and shift any axis that is moving to Stop Mode. (The axis will decelerate to a stop when positioning is completed, and an in-position check will be performed).

- G00 (PTP)
- G01, G02 and G03 commands with #optional numbers
- CIRCULAR INTERPOLATION commands (G02, G03) with different circular plane specifications than those for CIRCULAR PLANE SPECIFICATION commands (G17 to G22)
- TRAVERSE (G32) after CIRCULAR INTERPOLATION commands (G02, G03)
- G04 (DWELL TIMER)
- G26 (WORKPIECE ORIGIN RETURN)
- G27 (REFERENCE ORIGIN RETURN)
- G28 (ORIGIN SEARCH)
- G29 (ORIGIN UNDEFINED)
- G30 (SPEED CONTROL)
- G31 (INTERRUPT FEEDING)
- G54 (CHANGE REFERENCE COORDINATE SYSTEM PV)
- G79 (PROGRAM END)
- M000 to M999 as independent commands
- D000 to D255

The following commands must be executed in Stop Mode. Pre-reading will be paused.

- G01, G02, G03, G32 commands with an M code from M000 to M499 (including stopover)

Programming Examples In this programming example, positioning is executed in Stop Mode.

```
          :     :
N010      G11                 Switch to Stop Mode
N020      G01   X200  F200
N030      G01   X400  F200
          :     :
```

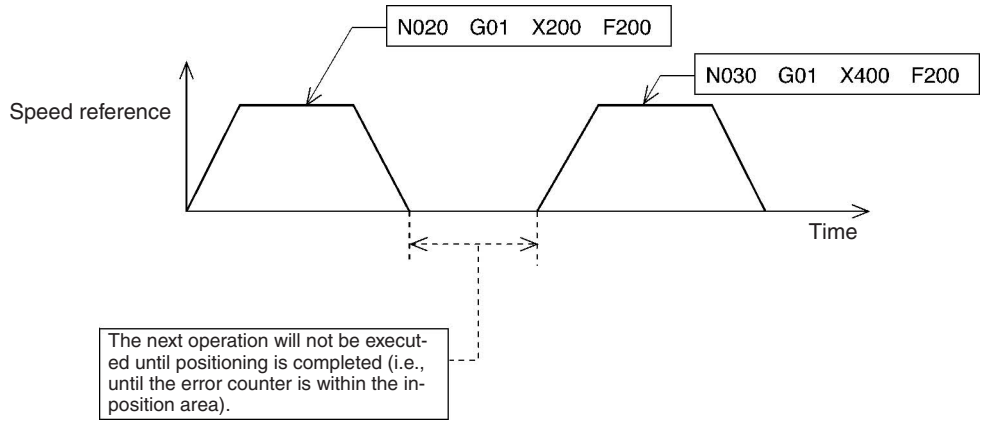

In this programming example, the In-position Check OFF Mode is enabled.

```
          :     :
N010      G13         Switch to In-position check OFF Mode
N020      G01   X200  F200
N030      G01   X400  F200
          :     :
```

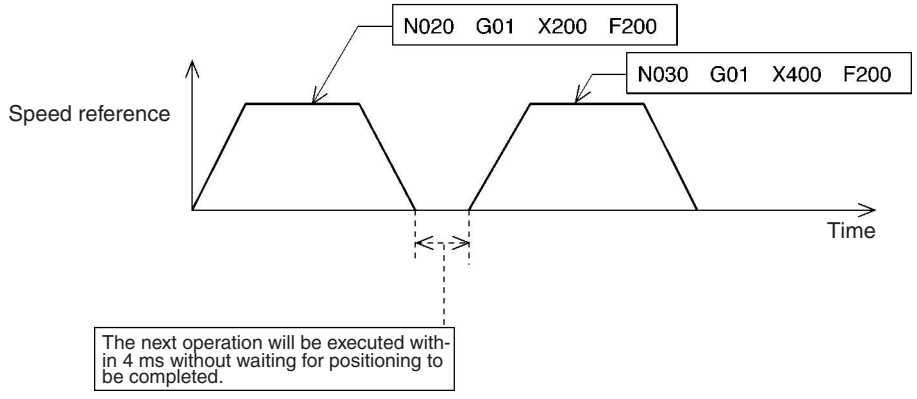

7-3-8 G17 to G22: CIRCULAR PLANE SPECIFICATION

Specifies the plane in which circular interpolation is to be performed.

Format

G17
G18 (See note.)
G19 (See note.)
G20 (See note.)
G21 (See note.)
G22 (See note.)

Note G18 to G22 are not available with the CS1W-MC221.

Operands None

Description

This command specifies the plane in which circular interpolation is performed, as shown in the following table.

Code	Plane
G17	Specifies the X-Y plane.
G18	Specifies the X-Z plane.
G19	Specifies the Y-Z plane.
G20	Specifies the X-U plane.
G21	Specifies the Y-U plane.
G22	Specifies the Z-U plane.

The setting remains in effect until a new plane is specified.

The initial setting is for the X-Y plane.

Programming Example 1

The following programming example performs circular interpolation in the X-Y plane.

```
          :     :
N010      G90
N011      G17
N012      G00   X0    Y50   Z0
N013      G03   X0    Y150  R50   F300
```

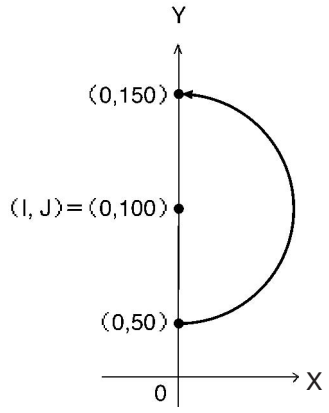

Programming Example 2

The following example performs circular interpolation in the Y-Z plane.

```
          :     :
N010      G90
N011      G17
N012      G00   X0    Y0    Z50
N013      G03   Y0    Z150  J0    K100  F300
```

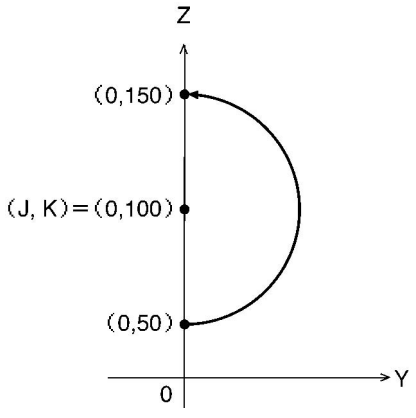

7-3-9 G26: REFERENCE ORIGIN RETURN

Moves to the reference origin.

Format

G26_<Axis name ... >[_M<M code>[/Stopover (Note.)]]
[_D<D code>[/Stopover (Note.)]]

Note The stopover function can be used with either an M code or a D code, but not with both.

Operands

The following table shows the possible settings for the operands.

Operand		Possible settings
Axis names		X, Y, Z, U
M code		000 to 999 (E00) to (E31) A0000 to A1999
D code		000(0) to 255 (E00) to (E31) A0000 to A1999
Stopover	Axes	X, Y, Z, U
	Coordinate data	0 to 39999999 (E00) to (E31) A0000 to A1999

Note Refer to *7-4 M Code Outputs* for details on M codes, and to *7-4-9 D Code Outputs* for details on D codes. Refer to *7-4-10 Stopover Function* for details on the stopover function. Refer to *SECTION 9 Establishing the Origin* for details on origin searches.

Description

This command moves the specified axes to the reference origin by PTP control. The coordinate system and mode settings will be as follows after the return to the reference origin:

1,2,3...

1. The coordinate system will be set to the reference coordinate system.
2. The command mode will be set to absolute specification.
3. The operating mode will be set to Pass Mode.

The settings will not be switched to the ones above if the G26 command is terminated while in progress by the OPTIONAL END command (G74), FORCED BLOCK END, or other command. The command is also considered to be in progress while waiting for the M code reset.

Programming Example

The following example moves the X and Y axes to the reference origin.

```
      :     :
N010  G26   XY    M500
      :     :
```

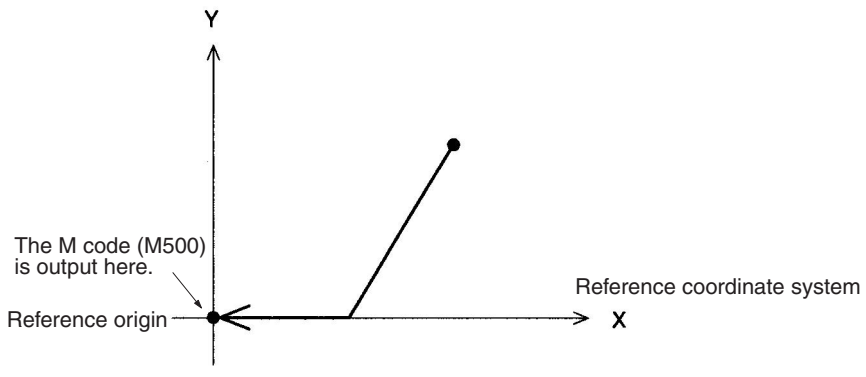

7-3-10 G27: WORKPIECE ORIGIN RETURN

Moves to the workpiece origin.

Format

G27_<Axis name ... >[_M<M code>[/Stopover (Note.)]]
[_D<D code>[/Stopover (Note.)]]

Note The stopover function can be used with either an M code or a D code, but not with both.

Operands

The following table shows the possible settings for the operands.

Operand		Possible settings
Axis names		X, Y, Z, U
M code		000 to 999 (E00) to (E31) A0000 to A1999
D code		000(0) to 255 (E00) to (E31) A0000 to A1999
Stopover	Axes	X, Y, Z, U
	Coordinate data	0 to 39999999 (E00) to (E31) A0000 to A1999

Note Refer to *7-4 M Code Outputs* for details on M codes, and to *7-4-9 D Code Outputs* for details on D codes. Refer to *7-4-10 Stopover Function* for details on the stopover function.

Description

This command moves the specified axes to the workpiece origin by PTP control. The coordinate system and mode settings will be as follows after the return to the workpiece origin:

1,2,3...

1. The coordinate system will be set to the workpiece coordinate system.
2. The command mode will be set to absolute specification.
3. The operating mode will be set to Pass Mode.

The settings will not be switched to the ones above if the G27 command is terminated while in progress by the OPTIONAL END command (G74), FORCED BLOCK END, or other command. The command is also considered to be in progress while waiting for the M code reset.

Programming Example

The following example moves the X and Y axes to the workpiece origin.

```
      :     :
N010  G27   XY    M500
      :     :
```

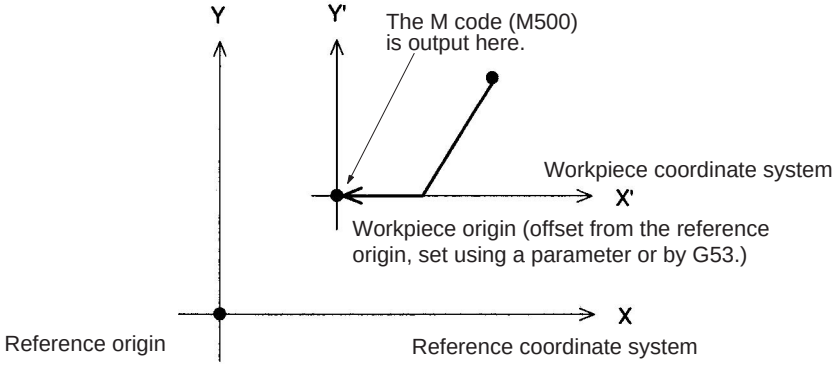

7-3-11 G28: ORIGIN SEARCH

Performs an origin search in the specified axes.

Format

G28_<Axis name ... >_[M<M code>[/Stopover (Note.)]]
[_D<D code>[/Stopover (Note.)]]

Note The stopover function can be used with either an M code or a D code, but not with both.

Operands

The following table shows the possible settings for the operands.

Operand		Possible settings
Axis names		X, Y, Z, U
M code		000 to 999 (E00) to (E31) A0000 to A1999
D code		000(0) to 255 (E00) to (E31) A0000 to A1999
Stopover	Axes	X, Y, Z, U
	Coordinate data	0 to 39999999 (E00) to (E31) A0000 to A1999

Note Refer to *7-4 M Code Outputs* for details on M codes, and to *7-4-9 D Code Outputs* for details on D codes. Refer to *7-4-10 Stopover Function* for details on the stopover function. Refer to *SECTION 9 Establishing the Origin* for details on the origin search function.

Description

This command performs an origin search in the specified axes.

Axes using Incremental Encoders:

The origin search operation searches for the origin in the specified axes according to the settings of the Origin Search Method, Origin Search Direction, Origin Deceleration Method, and Origin Proximity Input Logic parameters.

For axes in origin mode, the present position is set to zero and fixed as the origin when the origin search method is set. For axes in other modes, the origin is fixed after the origin search operation is executed.

Axes using Absolute Encoders:

As an upgrade to previous models, it is now possible to perform an origin search using an absolute encoder just as with an incremental encoder.

The mode will be as follows after the origin search has been completed.

1,2,3...

1. The coordinate system will be set to the reference coordinate system.
2. The command mode will be set to absolute specification.
3. The operating mode will be set to Pass Mode.

The settings will not be switched to the ones above if the G28 command is terminated while in progress by the OPTIONAL END command (G74), FORCED BLOCK END, or other command. The command is also considered to be in progress while waiting for the M code reset.

Programming Example

The following example performs an origin search for the X, Y, and Z axes.

```
      :     :
N010  G28   XYZ
      :     :
```

7-3-12 G29: ORIGIN UNDEFINED

Forcibly sets the origin to an undefined state for the specified axes.

Format

G29_<Axis name ... >

Operands

X, Y, Z, and U axes

Description

This command forcibly sets the origin to an undefined state for the specified axes.

- The No Origin Flag will turn ON in the PLC Interface Area.
- An asterisk (*) will be displayed for axes with undefined origins on the present value display on the Teaching Box.

The present position will not change with this command, but the present position of the machine will be updated continually. The following will occur if the origin is not defined.

- The software limits will be disabled.
- Zones will be disabled depending on the settings of the system parameters (i.e., they will be disabled when the zones depend on the origin being established).
- Positioning will not be allowed using G00, G01, G02, G03, G26 and G27 commands (when the axis mode is Normal Feed Mode).

Perform one of the following operations to re-establish the origin.

- Execute ORIGIN SEARCH (G28).
- Execute CHANGE REFERENCE COORDINATE SYSTEM PV (G54).

Programming Example

The following example sets the X and Y axes to an undefined state.

```
N000  P000  XY
N001  G00   X0    Y0    (Moves the axis to the system origin.)
N002  G29   XY          (Makes the origin undefined.)
N003  G30   X+    Y+    (Sets unlimited feeding.)
      :     :
```

7-3-13 G30: SPEED CONTROL AXIS FEEDING

Performs the feed rate control of a maximum of four axes.

Format

G30_<axis movement command ... >

Operands

The following table shows the possible settings for the operands.

Axis movement command	
Axis	**Coordinate data**
X, Y, Z, U	+, –

Description

The axis is fed in the positive direction if the coordinate data is set to positive.

The axis is fed in the negative direction if the coordinate data is set to negative.

The feed rate of each axis can be set individually.

X-axis feed rate = X-axis maximum feed rate x X-axis override value/100
Y-axis feed rate = Y-axis maximum feed rate x Y-axis override value/100
Z-axis feed rate = Z-axis maximum feed rate x Z-axis override value/100
U-axis feed rate = U-axis maximum feed rate x U-axis override value/100

The feed rate is set with the system parameters.

Override value: Set with in PLC Interface Area or Teaching Box within a range of 0.1% to 100.0%.

Example: The following X-axis feed rate will be obtained if the X-axis maximum feed rate is 10,000 mm/s and the X-axis override value is 50.0%.

X-axis feed rate = 10,000 x 50.0 /100 = 5,000 mm/s.

The acceleration time or deceleration time varies with the override value, as follows:

X-axis acceleration time = X-axis acceleration time* x override value/100.
X-axis deceleration time = X-axis deceleration time* x override value/100
Y-axis acceleration time = Y-axis acceleration time* x override value/100.
Y-axis deceleration time = Y-axis deceleration time* x override value/100
Z-axis acceleration time = Z-axis acceleration time* x override value/100
Z-axis deceleration time = Z-axis deceleration time* x override value/100
U-axis acceleration time = U-axis acceleration time* x override value/100
U-axis deceleration time = U-axis deceleration time* x override value /100
*These values are set with the system parameters.

The feed rate can be changed in real time by changing the override value. The operation will vary as follows depending on whether or not the origin is established:

Origin established:	The software limit will be enabled and the present position will be always refreshed.
Origin not established:	The software limit will be disabled. The present position will be set to 0 at the start of operation if the axis mode is Normal Feed Mode, and always refreshed if the axis mode is Unlimited Feed Mode.

Programming Example

The following example shows executing speed control, adjusting the speed with an override, and stopping with an optional number.

```
      :     :
N010  G74   16
      G30   X+
      :     :
```

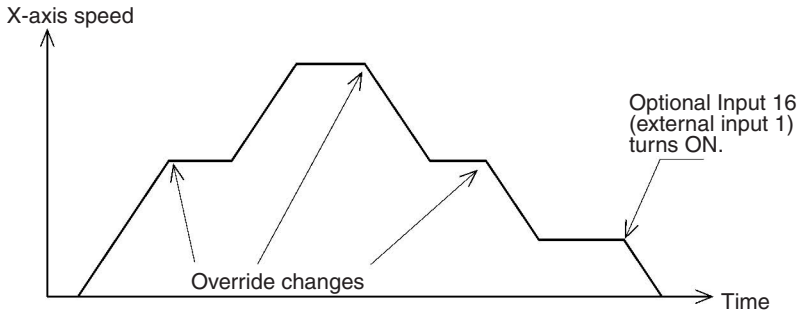

Note The preceding G01, G02, G03, and G32 commands will operate in Stop Mode instead of Pass Mode when this command is executed.

7-3-14 G31: INTERRUPT FEEDING

Feeds a specified axis for a specified travel distance when a general input turns ON.

Format

G31_<Axis name> <Coordinate 1>[/<Coordinate 2]
[_F <Speed Reference 1>] [_F <Speed Reference 2>]
[_M<M code>[/Stopover (Note.)]]
[_D<D code>[/Stopover (Note.)]]
[_S]

Note The stopover function can be used with either an M code or a D code, but not with both.

Example 1: `G31 X100 F200`

Example 2: `G31 X100 F200 F100`

Example 3: `G31 X100/200 F200`

Operands

The following table shows the possible settings for the operands.

Operand		Possible settings
Axis movement command	Axis names	X, Y, Z, U
	Coordinate Data 1 Coordinate Data 2	–39,999,999 to +39,999,999 (E00) to (E31) A0000 to A1999
Speed Reference 1 Speed Reference 2		0.0001 to +39,999,999 (E00) to (E31) A0000 to A1999
M code		000(0) to 999 (E00) to (E31) A0000 to A1999
D code		000(0) to 255 (E00) to (E31) A0000 to A1999
Stopover	Axes	X, Y, Z, U
	Coordinate data	0 to 39999999 (E00) to (E31) A0000 to A1999

Coordinate Data 1 is the travel distance after the interrupt, and Coordinate Data 2 is the maximum travel distance before the input is received.

Set Speed Reference 1 to a higher value than Speed Reference 2.

Note Refer to *7-4 M Code Outputs* for details on M codes, and to *7-4-9 D Code Outputs* for details on D codes. Refer to *7-4-10 Stopover Function* for details on the stopover function.

Description

The specified axis will be moved for the specified distance for positioning after the general input (1 to 4) is turned ON. It is also possible to specify a travel distance for when no general input is received to stop with an error (program execution interrupted) after positioning. An S option can also be used to execute the next block without an error occurring.

Refer to the following examples.

Example 1:Speed Reference 2 Not Specified

G31 X100 F200 (mm)

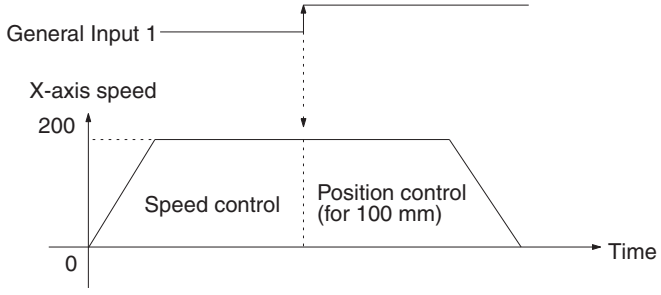

The X axis moves at 200 mm/s (speed control) until General Input 1 is turned ON. The X axis then moves for another 100 mm (position control) from the position where General Input 1 was turned ON.

Example 2: Speed Reference 2 Specified

G31 X100 F200 F100 (mm)

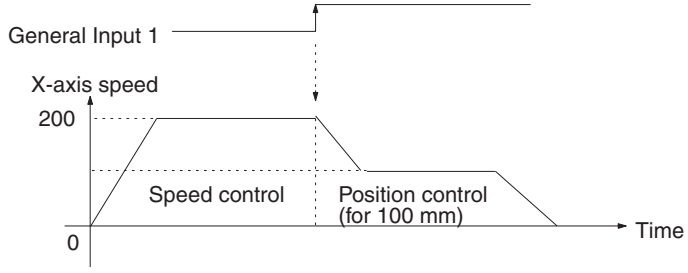

The X axis moves at 200 mm/s (speed control) until General Input 1 is turned ON. The speed of the X axis will decelerate to the speed specified by Speed Reference 2 (i.e., 100 mm/s) and the X axis will move for another 100 mm (position control) from the position where General Input 1 was turned ON.

There is no difference in acceleration/deceleration time between the G31 and G00 commands. It is generally set automatically according to the ratio of the speed reference to the maximum feed rate. There are exceptions, however. Refer to the following *Operation Examples*.

Refer to the following table for the correspondence between interrupt feeding axes and general inputs.

Axis	General input
X	Turning ON of General Input 1
Y	Turning ON of General Input 2
Z	Turning ON of General Input 3
U	Turning ON of General Input 4

The operation will vary as follows depending on whether or not the origin is established.

Origin established: The software limit will be enabled and the present position will be always refreshed.

Origin not established: The software limit will be disabled. The present position will be set to 0 at the start of operation if the axis mode is Normal Feed Mode, and always refreshed if the axis mode is Unlimited Feed Mode.

Note

1. The preceding G01, G02, G03, or G32 command will operate in Stop Mode instead of Pass Mode if this command is executed.
2. An error will result if the G31 command is executed if the value of Speed Reference 2 is the same as or larger than that of Speed Reference 1. Make sure that the value of the Speed Reference 1 is larger than of Speed Reference 2.
3. The value of a speed reference must be the same as or less than the maximum feed rate. If the value is larger than the maximum feed rate, the axis will move at maximum feed rate and the override will be enabled for the speed control but disabled for the position control.

Positioning Curve Examples

The following positioning curves are obtained according to the speed and movement of the axis if a general input is turned ON.

Speed Reference 2 Omitted

1,2,3... 1. A general input is turned ON while the axis is moving at constant speed, but the deceleration time is extremely short because the speed is high and the movement is small.

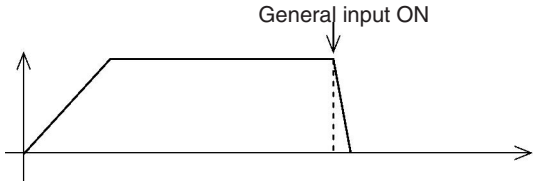

2. A general input is turned ON while the axis is being accelerated. (1)

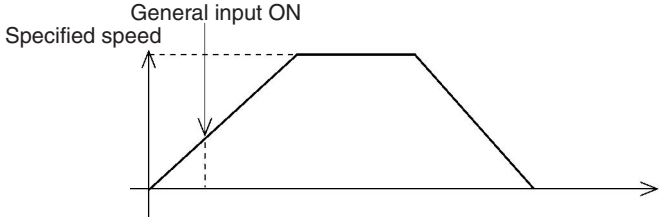

3. A general input is turned ON while the axis is being accelerated. (2)

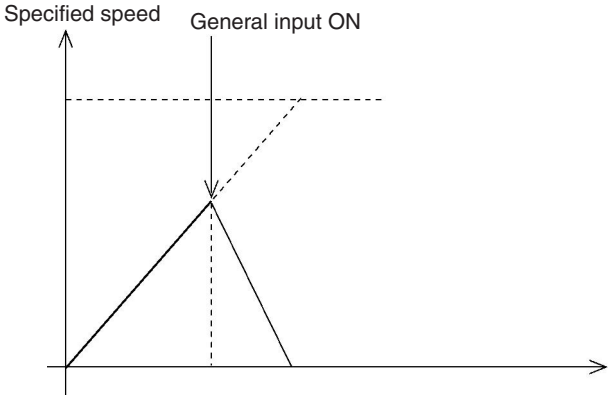

4. A general input is turned ON while the axis is being accelerated. (3)

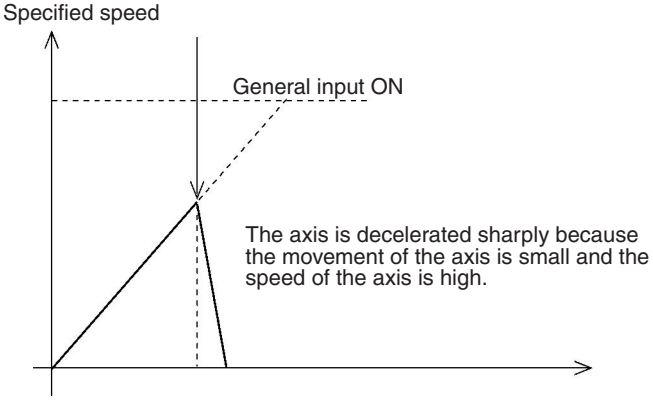

Speed Reference 2 Specified

1,2,3... 1. A general input is turned ON while the axis is moving at constant speed, but the deceleration time is extremely short and the speed is not decelerated to what was specified with Speed Reference 2 because the speed of the axis is high and the movement of the axis is small.

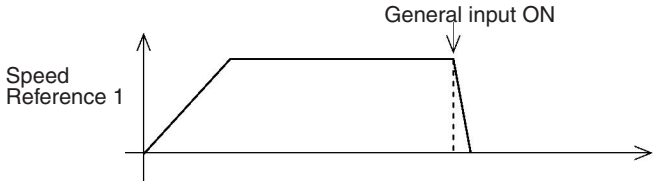

2. A general input is turned ON while the axis is being accelerated. (1)

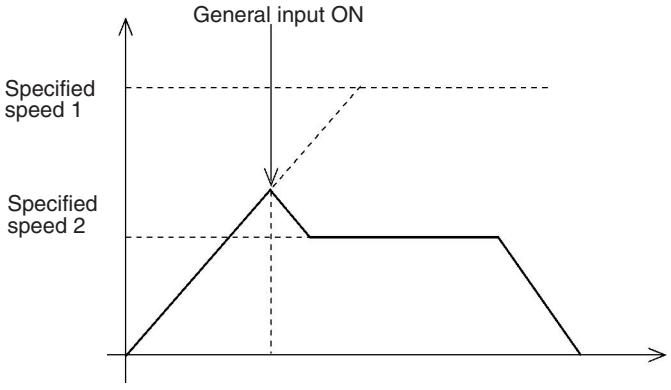

3. A general input is turned ON while the axis is being accelerated. (2)

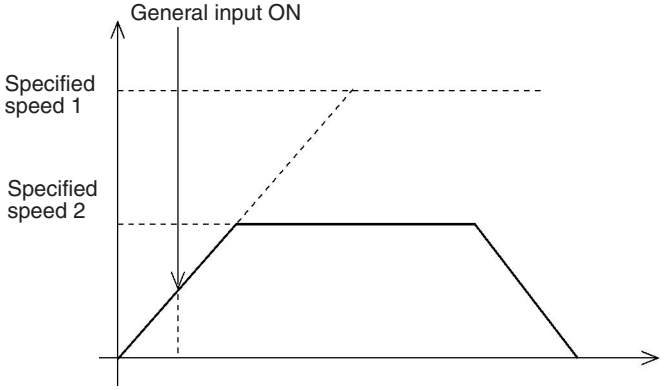

4. A general input is turned ON while the axis is being accelerated. (3)

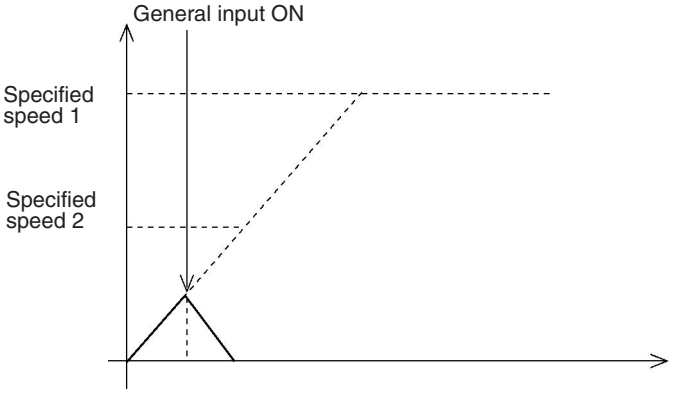

5. A general input is turned ON when the axis is being accelerated. (4)

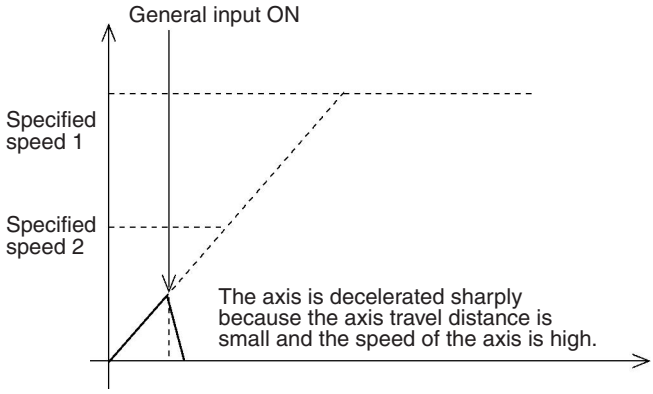

Example 3: Specifying the Travel Distance for When No Interrupt is Input

G31 X100/200 F200

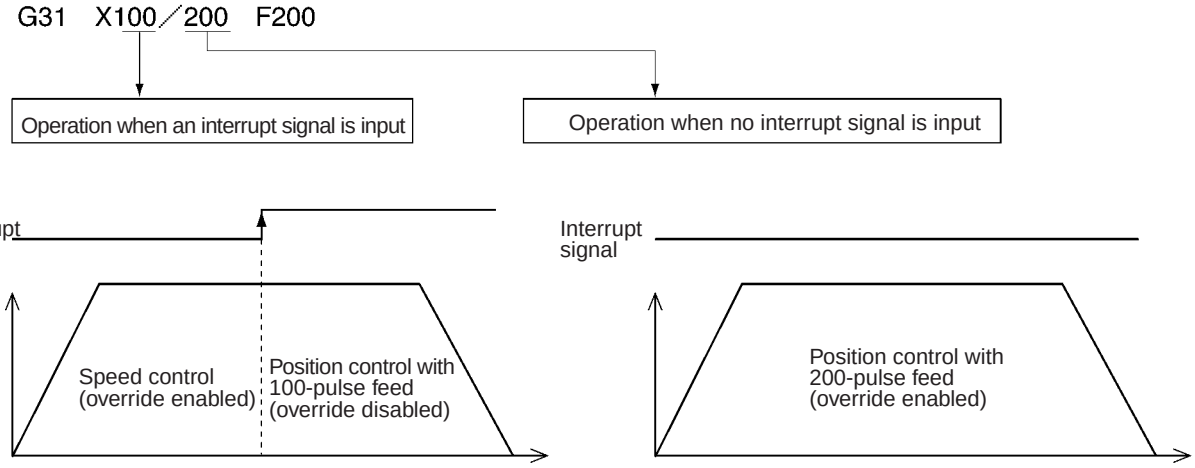

If no interrupt signal is input after positioning is completed, an error will occur and operation will stop (program execution interrupt). If an S option is attached, however, the condition is not judged to be an error and the next block can still be executed.

Example

G31 × 100/200 F200 S

An interrupt input signal can be received at any time. The axis will be fed the reference amount at the going speed if an interrupt is input during deceleration.

Operation when an interrupt signal is input during deceleration

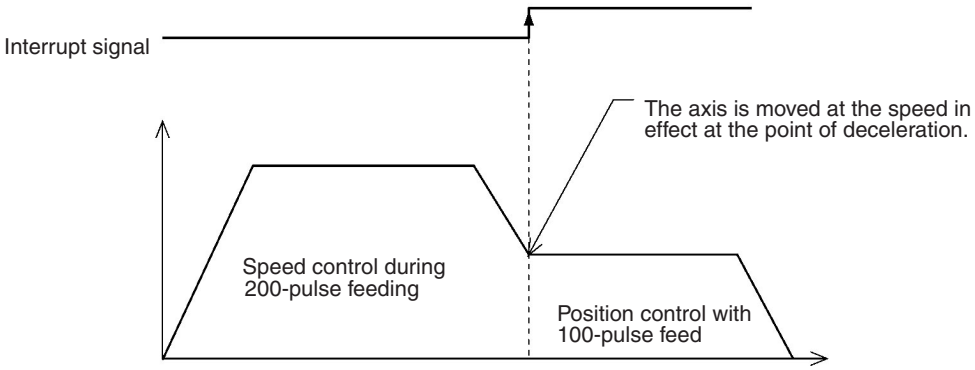

Note When positioning using interrupt feeding, positions that are determined after external sensors are enabled will vary depending on various conditions, such as the ambient temperature. This variation occurs due to detection delays by external sensors and the general input circuitry of the MC Unit.

The following illustration shows the MC Unit detection delay, and the resulting variation, assuming that there is no detection delay due to external sensors.

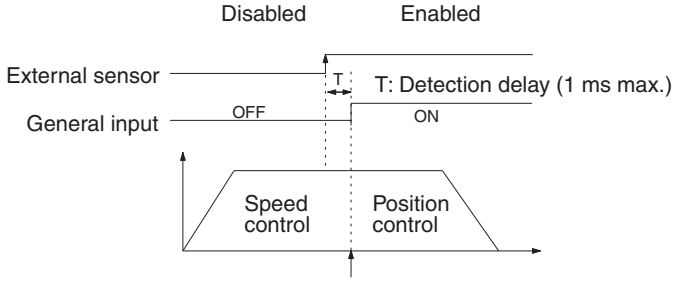

Timing for starting actual positioning by the MC Unit.

- The external sensor changes from disabled to enabled.
- The status of this external sensor is taken as the general input. There is a maximum delay of 1 ms in this general input circuit, so the MC Unit starts positioning control at no more than 1 ms after the external sensor is enabled.
- Accordingly, the actual position to be determined by the MC Unit after the external sensor is enabled can be obtained according to the following formula.

  Actual travel distance [pulse] =
  Specified travel distance [pulse] + Feed rate [pps] x Detection delay [s]

  - Actual travel distance refers to the distance from the point where the external sensor is enabled to the point where the machine actually stops moving.
  - Specified travel distance refers to the distance specified by G31.
  - Feed rate refers to the rate specified by G31.
  - The detection delay is 0.001 (s) max.

7-3-15 G32: TRAVERSE

This command is provided for traverse, winding machine operations and it can be used in either Pass Mode or In-position Check OFF Mode.

Format

G32_<Axis movement command>_<Speed reference>
[_M<M code>[/Stopover (Note 1)]]
[_D<D code>[/Stopover (Note 1)]]
[_O<Trailing end specification>](Note 2)
_L<Number of layers>

Note

1. The stopover function can be used with either an M code or a D code, but not with both.
2. When winding at the end, specify the number of layers. Winding will not be performed at the end if the number of layers is not specified.

Operands

The following table shows the possible settings for the operands.

Operand		Possible settings	
Rotating axis		X	Z
Coordinate data		±39999999 (E00) to (E31) A0 to A1999	±39999999 (E00) to (E31) A0 to A1999
Traverse axis		Y	U
Coordinate data		±39999999 (E00) to (E31) A0000 to A1999	
Speed reference		0.0001 to 39999999 (E00) to (E31) A0000 to A1999	
M code		000(0) to 999 (E00) to (E31) A0000 to A1999	
D code		000(0) to 255 (E00) to (E31) A0000 to A1999	
Stopover	Axes	X, Y, Z, U	
	Coordinate data	0 to 39999999 (E00) to (E31) A0000 to A1999	
End specification		0 to 39999999 (E00) to (E31) A0000 to A1999	
Number of layers		1 to 111111 (E00) to (E31) A0 to A1999	

Note Refer to *7-4 M Code Outputs* for details on M codes, and to *7-4-9 D Code Outputs* for details on D codes. Refer to *7-4-10 Stopover Function* for details on the stopover function.

Values for all commands are relative to the present value.

Operation

In the following application, the rotating axis of the spool is the X axis and the traverse axis is the Y axis.

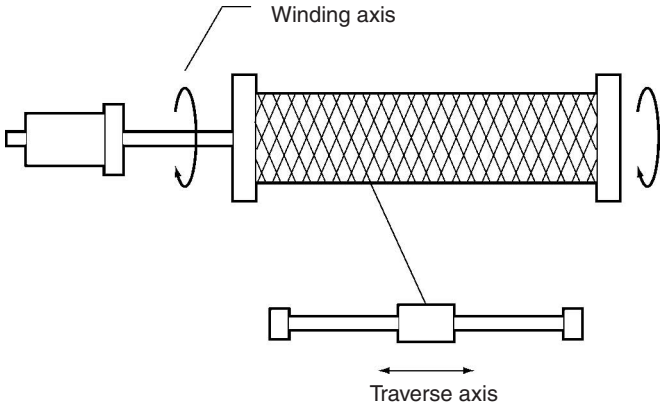

G Command Example

The M and D codes are omitted here. Specify the command units in the parameters using [deg.] for the X axis and [mm] for the Y axis.

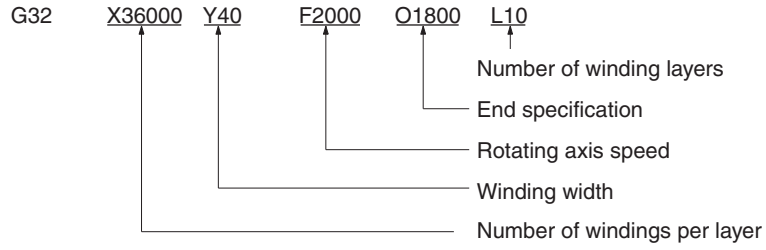

Number of Windings per Layer
Setting range: –39,999,999 to +39,999,999

Sets the number of windings per layer in [deg.] units. For 100 revolutions, set 36,000 because 360 [deg.] × 100 = 36,000 [deg.].

The windings run clockwise if a positive number is set and counterclockwise if a negative number is set. The minimum setting unit is 0.0001 [deg.].

Only the X and Z axes can be specified as the rotating axis and the rotating axis must be set to Unlimited Feed Mode. Refer to *6-20 Unlimited Feeding* for details on this function.

Winding Width
Specifies the traverse width in [mm] units.

Axis Rotation Speed
Specifies X- or Z-axis rotation speed in [deg./s] units.

End Specification
Specifies the number of windings at the trailing end in [deg.] units. To set five windings at the end for example, then specify “01800” because 360 (deg.) × 5 = 1,800 [deg.]. No winding at the end will be set if the O option is omitted.

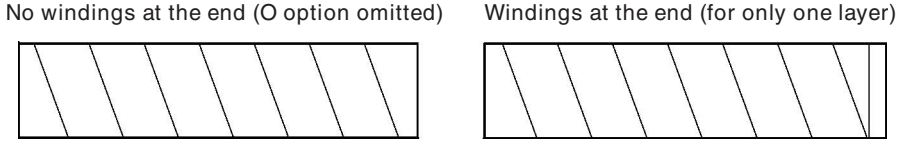

Number of Winding Layers
Specifies the number of winding layers.

Restrictions

- Number of X-axis or Z-axis Rotations

  The maximum distance that the X or Z axis can travel in one revolution without stopping must fall within the following equation:

  |Number of windings per layer x Total no. of windings + Number of end windings| ≤ 39,999,999 (deg.)

  Numbers in the preceding range as well as the feed rate (in pulse units) after the pulse rate is changed must not exceed |7FFFFFFF|.

- Y-axis or U-axis Travel Distance

  The maximum distance that the Y axis or the U axis can travel in one revolution without stopping must fall within the following equation:

  |Traverse width| ≤ 39,999,999 (mm)

  Numbers in the preceding range as well as the feed rate (in pulse units) after the pulse rate is changed must not exceed 7FFFFFFF.

- Number of Winding Layers

  The maximum number of windings is 111111 (39,999,999 [deg.]/360 [deg.]).

Programming Examples

Example 1

In this example, a traverse operation is executed using aligned windings, a traverse width of 100 mm, 100 windings per layer and a total of 10 layers.

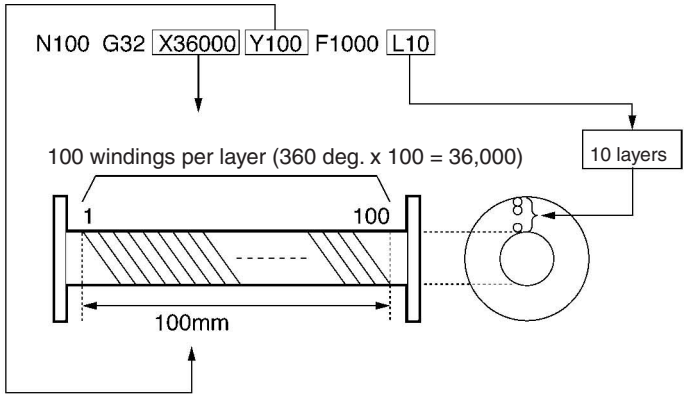

Movement of each axis

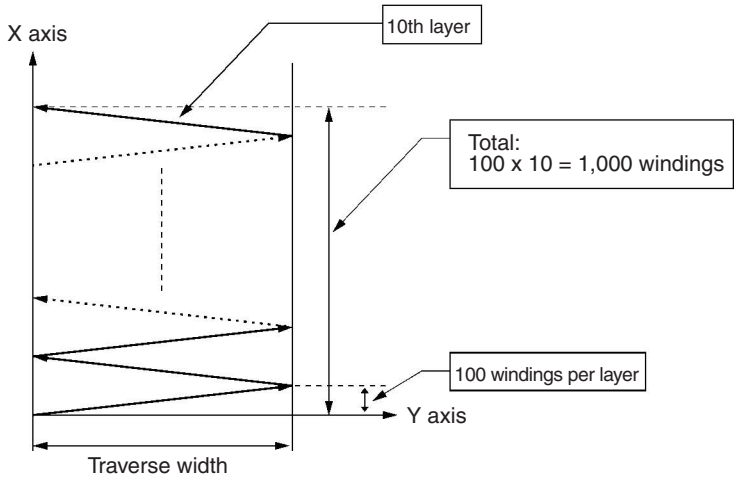

Example 2

In this example, just once winding is executed each time at the end. This is an example of Pass Mode operation combined with G32.

```
N110  G10  ..... Specifies Pass Mode.
N120  G32   X36000  Y100   F1000  O360      L1..... Winds one revolution at the end (0 designation).
N130  G32   X36000  Y-100  F1000  O360      L1..... Moves back to the start.
```

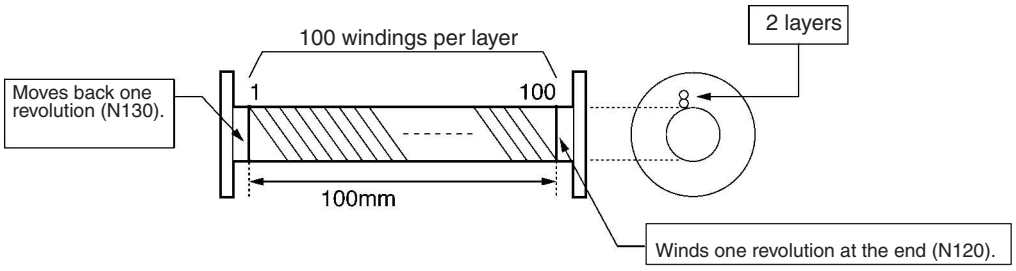

Movement of each axis

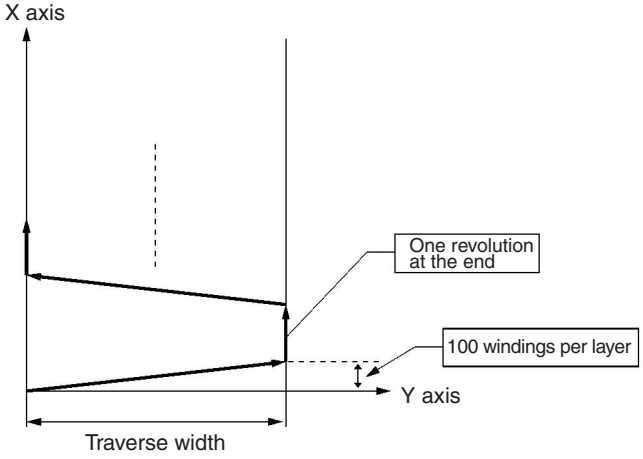

7-3-16 G50: SELECT REFERENCE COORDINATE SYSTEM

Specifies the reference coordinate system as the coordinate system.

Format

G50

Operands

None

Description

This command specifies the reference coordinate system as the coordinate system. The coordinate data for subsequent axis operations will be processed as reference coordinate data.

The default setting at the start of program execution will be the reference coordinate system.

After WORKPIECE ORIGIN RETURN (G27) is executed, the workpiece coordinate system will be used.

Programming Example

The following example shows setting the reference coordinate system as the coordinate system and performing linear interpolation.

```
      :     :
N009  G90
N010  G50
N011  G01   X100  Y200
      :     :
```

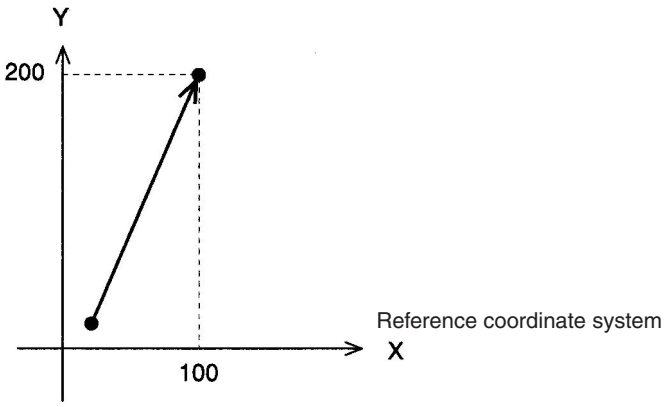

7-3-17 G51: SELECT WORKPIECE COORDINATE SYSTEM

Sets the workpiece coordinate system as the coordinate system.

Format

G51

Operands

None

Description

This command sets the workpiece coordinate system as the coordinate system. After this command is executed, the coordinate data in all subsequent axis operations is processed as workpiece coordinate data.

The origin for the workpiece coordinate system can be set with the system parameters or with G53. The reference coordinate system will be used after REFERENCE ORIGIN RETURN (G26) or ORIGIN SEARCH (G28) is executed.

Programming Example

The following example shows setting the workpiece coordinate system as the coordinate system and performing linear interpolation.

```
      :     :
N009  G90
N010  G51
N011  G01   X100  Y200
      :     :
```

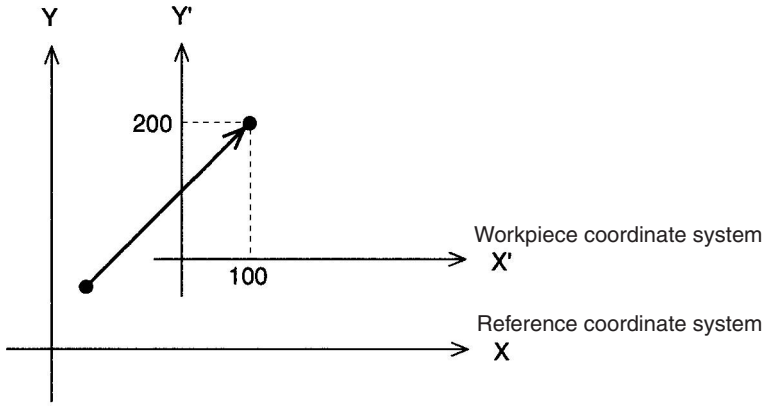

7-3-18 G53: CHANGE WORKPIECE ORIGIN OFFSET

Changes the origin of the workpiece coordinate system.

Format

G53_<offset value ... >

Operands

The following table shows the possible settings for the operands.

Operand		Possible settings
Offset value	Axis names	X, Y, Z, U
	Data	±39,999,999 (E00) to (E31) A0000 to A1999

Description

This command changes the offset between the reference coordinate system origin and the workpiece coordinate system origin to a specified value. The workpiece coordinate system will not be selected by executing this command. Specify using the workpiece coordinate system with G51.

The default setting for the workpiece coordinate system origin is the workpiece origin offset set in the system parameters when the main program is executed from the beginning.

The workpiece origin offset that is set in system parameters will not be updated by executing this command.

A software limit exceeded error will occur if a specified value exceeds the software limits set in the system parameters.

Programming Example 1

The following example shows changing the origin of the workpiece coordinate system.

```
      :     :
N020  G10                 Sets Pass Mode.
N021  G01   X100  Y100  F100
N022  G01   X200
N023  G53   X100
N024  G01   X300
      :     :
```

Programming Example 2

The following example shows changing the origin of the workpiece coordinate system.

```
      :     :
N010  G53   X100  Y50
      :     :
```

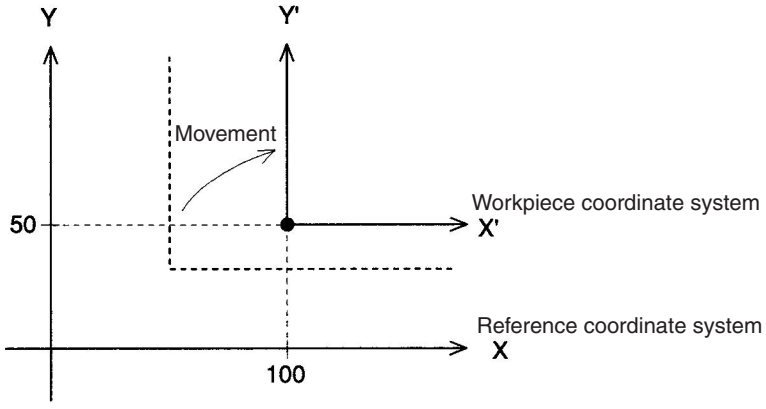

7-3-19 G54: CHANGE REFERENCE COORDINATE SYSTEM PV

Changes the present value in the reference coordinate system.

Format

G54_<present value ... >

Operands

The following table shows the possible settings for the operands.

Operand		Possible settings
Present value	Axis name	X, Y, Z, U
	Data	±39,999,999 (E00) to (E31) A0000 to A1999

Description

This command changes the present value of the specified axis reference coordinate system to a specified value.

⚠ **Caution** The absolute value stored in the absolute encoder will not be changed by this command. Unlock the servo, lock it again and read values to use the present position in the absolute encoder.

A software limit exceeded error will occur if a specified value exceeds the software limits set in the system parameters.

⚠ **Caution** If this command is executed just after a G01, G02, G03, or G32 command, the interpolation will be performed in Stop Mode, not Pass Mode, even if Pass Mode has been selected. The following example shows this effect.

Programming Example

In this programming example, the present value of the reference coordinate system is changed from (300, 400) to (200, 200).

```
          :     :
N010      G54   X200  Y200
          :     :
```

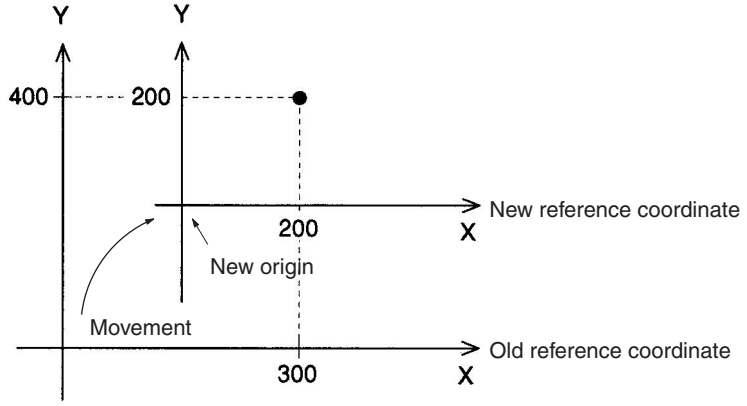

7-3-20 G60: ARITHMETIC OPERATIONS

Performs arithmetic operations on position data and registers.

Format

G60_<first term = second term operator third term>

Operands

The following table shows the possible settings for the operands.

Operand	Possible settings
First term	A0000 to A1999 E00 to E31
Second term	A0000 to A1999 E00 to E31 ±39,999,999
Operator	+, –, *, or / (addition, subtraction, multiplication, or division)
Third term	A0000 to A1999 E00 to E31 ±39,999,999

Description

This command performs arithmetic operations on numerical values, position data, or the contents of registers. When the first term is a register, the second and third terms will be integers. (Non-integer values are rounded to the nearest integer.)

Example

If G60: E00 = 0.4 + 0.4 is executed, then zero will be substituted at E00.

When the first term is a position data address, the second and third terms will be real numbers and values below the fifth decimal place will be rounded off.

Example

If G60: A0000 = 1.2345 x 1.01 is executed, then zero will be substituted at A0000.

The possible values for the result are as follows:

–39,999,999 to –0.0001
0
0.0001 to 39,999,999

An error will occur if the first term's data is not within the acceptable range. The possible values for the first term are as follows:

When the first term is position data: –39,999,999 to +39,999,999
When the first term is a register: 0000 to 1999

Registers are cleared to zero if the power is turned ON or the system is restarted.

Substitute values when registers are used.

Programming Example

The following example shows subtracting 500 from the value at A1000 and substituting the result at A0000.

```
      :      :
N010  G60    A0000=A1000–500
      :      :
```

7-3-21 G63: SUBSTITUTION

Substitutes position data and registers.

Format

G63_<first term = second term >

Operands

The following table shows the possible settings for the operands.

Operand	Possible settings
First term	A0000 to A1999 E00 to E31
Second term	A0000 to A1999 E00 to E31 ±39,999,999 X, Y, Z, U

Description

This command copies position data, register contents, present values, or numerical values into position data addresses or registers.

When the second term is an axis name, the present position of that axis in the reference coordinate system is copied to the first term. That present position is copied according to the pulse rate and minimum unit setting for that axis specified in the system parameters. However, if the origin has not been fixed, a position data range overflow will occur.

When the first term is a register, the value in the second term will be treated as an integer. Non-integer values are rounded to the nearest integer.

A register range overflow will occur if the first term's data is not within the acceptable range. The possible values for the first term are as follows:

When the first term is position data: –39,999,999 to +39,999,999
When the first term is a register: 0000 to 1999

Registers are cleared to zero only when the power is turned on, so be sure to initialize the register contents when the program is started.

Programming Example

The following example shows substituting 123.45 for A1000.

```
      :     :
N010  G63   A1000=123.45
      :     :
```

7-3-22 G69: CHANGE PARAMETER

Changes the setting of the specified parameter.

Format

G69_<#parameter type>/<new setting ... >

Operands

The following table shows the possible settings for the operands.

Operand		Possible settings
Parameter type		1 to 8
New setting	Axis names	X, Y, Z, U
	New setting	Refer to the ranges below for each parameter. (E00) to (E31) A0000 to A1999

Description

This command changes the setting of the specified parameter. The following table shows the parameters that can be changed and the parameter type values used to identify them. Parameters #1 to #4 are feed rate parameters, and #5 to #8 are servo parameters.

Parameter type	Parameter	Setting range
#1	Acceleration time	0 to 100,000 (ms)
#2	Deceleration time	0 to 100,000 (ms)
#3	Interpolation acceleration time	0 to 100,000 (ms)

Parameter type	Parameter	Setting range
#4	Interpolation deceleration time	0 to 100,000 (ms)
#5	Position loop gain	1 to 250 (rad/s)
#6	Position loop feed forward gain	0 to 100 (%)
#7	In-position	0 to 10,000 (pulses)
#8	Error counter warning	0 to 65,000 (pulses)

The actual settings in the system parameters are not changed by G69.

System parameters will be initialized when the main program is executed starting from the beginning. If a position data address or register is specified and the specified data is not an integer, then the value will be rounded off to the nearest integer. A number range over error will occur if the specified data is not within the allowable range.

The following is supplemental information for each of the parameters.

<Acceleration time, deceleration time, interpolation acceleration time, interpolation deceleration time>

When the operating mode is Stop Mode or In-position Check OFF Mode, the new acceleration/deceleration time will be reflected in the next operation.

When the operating mode is Pass Mode and the interpolation acceleration/deceleration time is changed during linear or circular interpolation, the new interpolation acceleration/deceleration time will go into effect between G01, G02, G03, and G32 commands following the G69 command.

<Position loop gain, position loop feed forward gain, in-position, error counter warning>
In Stop Mode, these values will go into effect with the next G69 command. In In-position Check OFF Mode, these values will go into effect with the next G69 command if an axis operation is not in progress and at the end of the operation command before the G69 command if an axis operation is in progress.

Values changed with G69 are enabled only during program operation. The system parameters will be returned when the Program Execution Flag is OFF.

Programming Example

In this programming example, the interpolation acceleration time is changed during interpolation.

```
          :     :
N009      G01   X200  Y300
N010      G69   #3/X100
N011      G01   X300  Y500
N012      G01   X500  Y800
          :     :
```

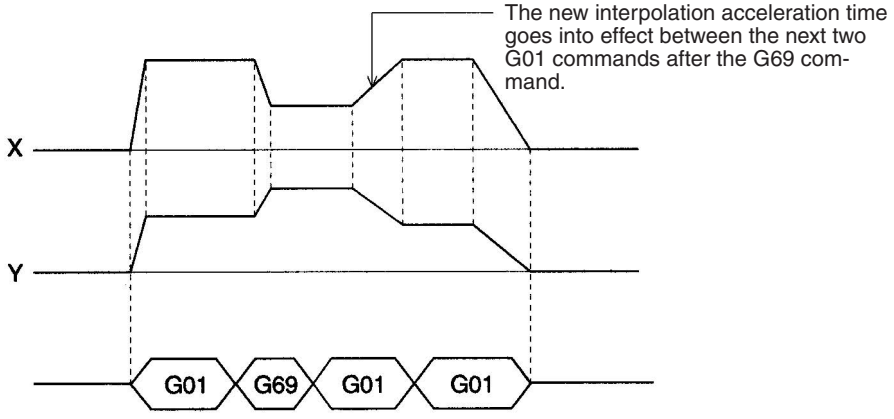

7-3-23 G70: UNCONDITIONAL JUMP

Unconditionally jumps to the specified block.

Format

G70_<jump destination block number> [/L<number of loops>]

Operands

The following table shows the possible settings for the operands.

Operand	Possible settings
Destination block number	N000 to N999
Number of loops	1 to 39,999,999 (E00) to (E31) A0000 to A1999

Description

This command unconditionally jumps to the specified block. A fixed number of jumps (a loop) can be created by specifying a number of loops.

When a number of loops is specified, the destination block number must be before the current block number.

If an UNCONDITIONAL JUMP (G70) or a CONDITIONAL JUMP (G71) command is used to exit a loop before the number of loops has counted down to zero and the jump is to a program location after the loop, the number of loops will be cleared when another loop is started.

A second loop cannot be executed while a loop is in progress. The following diagram demonstrates this programming error.

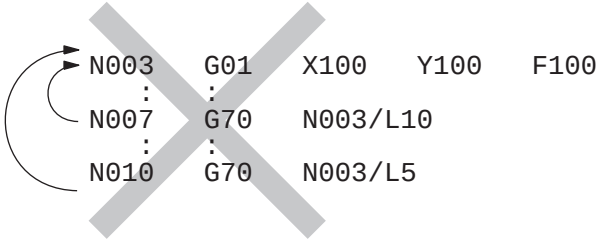

Loops cannot be nested as shown above, but up to six loops can be nested by calling subroutines containing loops. The number of loops in each subroutine is cleared when the subroutine ends. Refer to *7-3-25 G72: SUBROUTINE JUMP* for details.

When the number of loops is set indirectly from position data with register specification or position data number specification, the number of loops will be 0 if the value of the position data is 0. Non-integer position data values will be rounded off to the nearest integer value. An error will also occur if the position data is negative.

Programming Example

The following example shows executing another loop when a given condition occurs in the first loop.

```
      :     :
N020  G00   X100
N030  G71   N090/A1000=1
N040  G70   N020/L100..... ①
      :     :
      :     :
N090  G00   X3200
N100  G70   N090/L50..... ②
      :     :
```

In loop ①, the program will jump to N020 up to 100 times while A1000≠1, so blocks N020 and N030 will be executed up to 101 times.

In loop ②, the program will jump to N090 up to 50 times, so block N090 will be executed up to 51 times.

If A1000=1 on the 20th execution in loop ①, the program would jump to block N100. The remaining value of 80 jumps in the number of loops would be cleared and the number of loops would be set to the new value of 50 for block N100.

7-3-24 G71: CONDITIONAL JUMP

Jumps to the specified block when the condition is met.

Format

G71_<jump destination block number>/<condition equation>

Operands

The following table shows the possible settings for the operands.

Operand		Possible settings
Destination block number		N000 to N999
Condition equation	First term	A0000 to A1999 E00 to E31
	Operator	=, <, >, or !
	Second term	A0000 to A1999 E00 to E31 ±39,999,999

Description

This command jumps to the specified block when the given condition is met. The “!” operator is the inequality operator (not equal to). The first and second terms will be compared as real numbers, even if registers are specified.

Programming Example

The following example shows repeating until A1000 = 10.

```
          :     :
N008      G91
N009      G63   A1000=0
N010      G00   X500
N011      G60   A1000=A1000+1
N012      G71   N010/A1000 ! 10
          :     :
```

In this programming example, 0 is substituted for A1000 in block N009 and then incremented by 1 in block N011 after the positioning operation in block N010. At N012, the program jumps back to N010 and repeats blocks N010 to N012 while A1000 ≠10. The program proceeds when A1000=10.

7-3-25 G72: SUBROUTINE JUMP

Calls the specified subroutine.

Format

G72_<subroutine number>

Operands

The following table shows the possible settings for the operands.

Operand	Possible settings
Subroutine number	P500 to P999
	A0000 to A1999

Description

This command calls and executes the specified subroutine. Subroutines can be nested five times. An error will occur if a sixth subroutine is called.

If the position data number is specified for the subroutine number, the subroutine stored in the position data will be called and executed (indirect calling).

A no program error will result if the position data does not satisfy the following condition.

500 ≤ Position data ≤ 999

Programming Example

The following example shows calling a subroutine.

```
      :     :
N010  G72   P500
      :     :
```

Up to six loops can be created by calling subroutines, as shown in the following diagram.

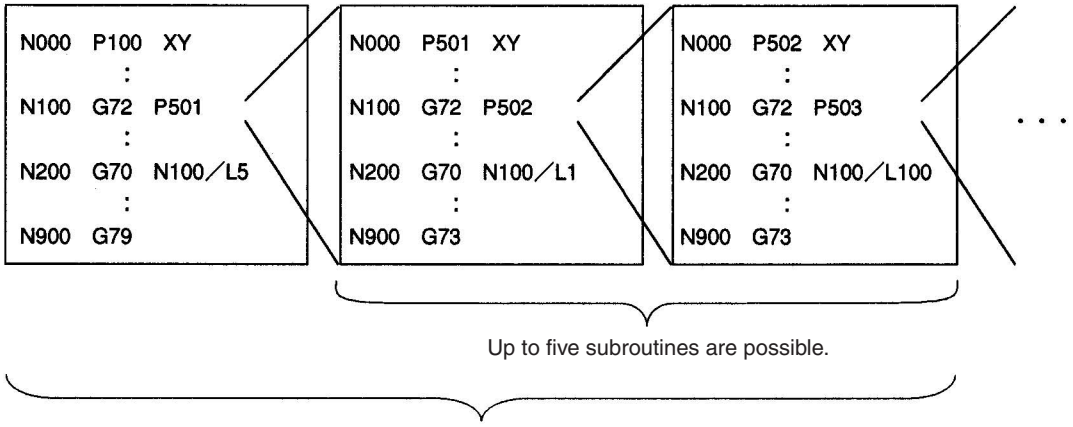

7-3-26 G73: SUBROUTINE END

Ends the subroutine.

Format

G73

Operands

None

Description

This command ends the subroutine and returns control to the block after the one that called the subroutine. This command must be programmed at the end of every subroutine.

Programming Example

```
N000  P510  XYZ
      :     :
      :     :
      :     :
N100  G73
```

7-3-27 G74: OPTIONAL END

Ends the block currently being executed when the specified optional input goes ON.

Format

G74□<optional number>

Operands

The following table shows the possible settings for the operands.

Operand	Possible settings
Optional number	00 to 19

Description

If the specified input is received while the block after the one with this command is being executed, execution of that block will be interrupted and the program will proceed to execute the following block.

If an axis operation is being executed, the operation will be decelerated to a stop before proceeding to the next block. If a DWELL TIMER (G04) command is being executed, the command will be interrupted and the remaining time cancelled.

The source of the optional input depends on the optional number specified, as shown below.

0 through 15: Inputs from the PLC Interface Area
16 through 19: Inputs from general inputs 1 to 4

This command is ineffective if the following block contains a SUBROUTINE END (G73) or PROGRAM END (G79) command. If the specified optional input is ON already when G74 is interpreted, this command will operate just like the OPTIONAL SKIP (G75) command.

Programming Example

The following example shows stopping linear interpolation in progress by turning ON an optional input.

```
      :     :
N008  G11
N009  G91
N010  G74   3
N011  G01   X100  F100
N012  G01   X100
      :     :
```

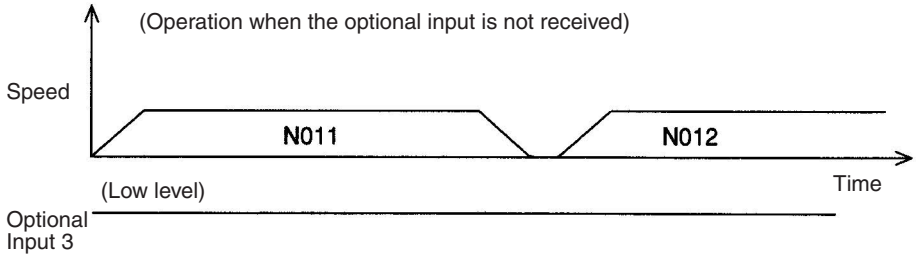

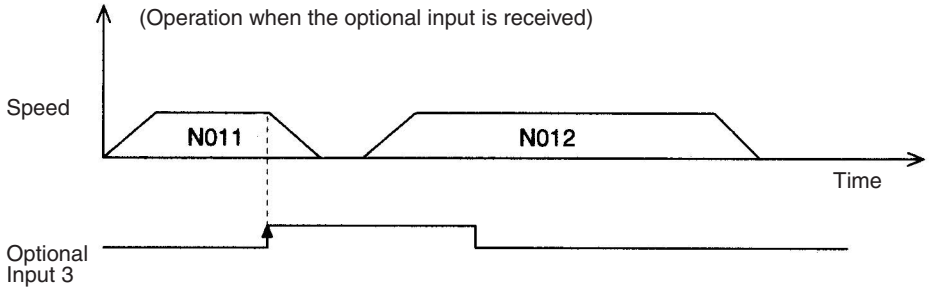

When G74 is preread, the next block after G74 will be disabled if the optional input is ON when starting after pausing.

```
N001 G10
N003 G01 X100000 F1000
...
(Commands other than for axis operation)
...
N010 G74 17
N011 G00 X20000
```

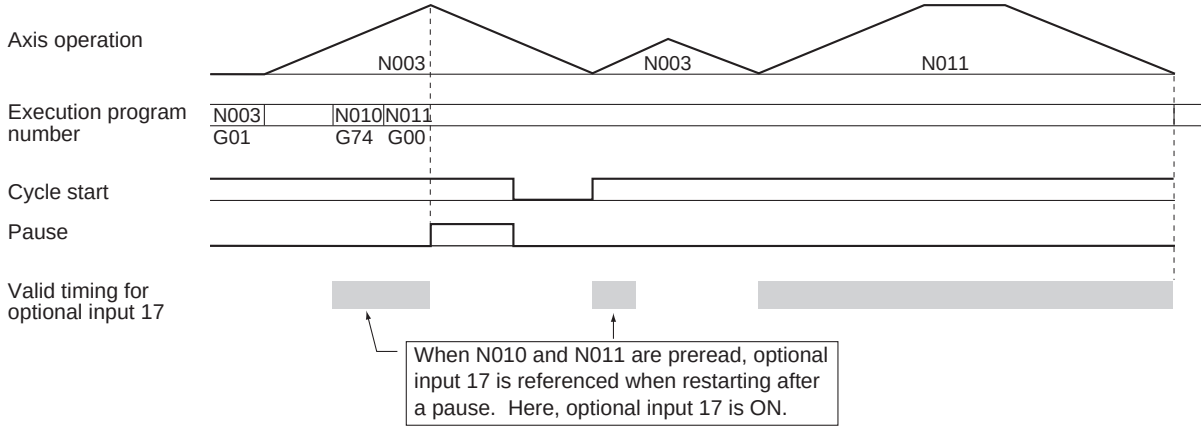

7-3-28 G75: OPTIONAL SKIP

Skips the next block when the specified optional input is ON.

Format

G75□<optional number>

Operands

The following table shows the possible settings for the operands.

Operand	Possible settings
Optional number	00 to 19

Description

If the specified input is ON when this command is executed, the next block will be skipped. The source of the optional input depends on the optional number specified, as shown below.

0 through 15: Inputs from the PLC Interface Area
16 through 19: Inputs from general inputs 1 to 4

Program execution will continue normally even if the optional input comes ON while the next block is being executed. The OPTIONAL SKIP (G75) command will be disabled if the following block contains a SUBROUTINE END command (G73) or PROGRAM END command (G79).

Programming Example

The following example shows disabling a linear interpolation operation by turning ON an optional input.

```
      :     :
N008  G11
N009  G91
N010  G01   X500  F100
N011  G75   3
N012  G01   X500  F200
```

```
N013  G01   X500
      :     :
```

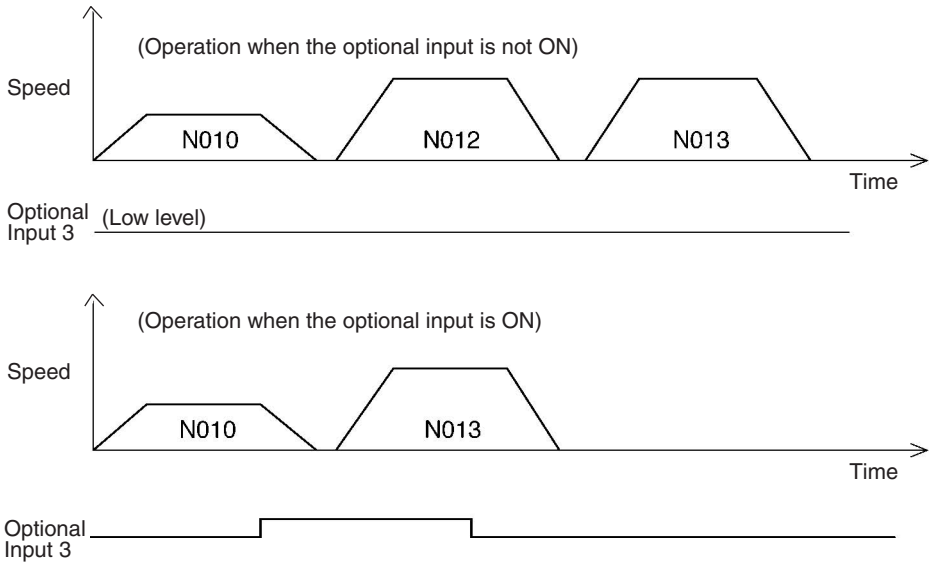

When block N008 contains the Pass Mode (G10) command, blocks N011 and N012 are pre-executed while N010 is being executed, so block N012 will not be skipped if Optional Input 3 is turned ON after execution of block N010.

To ensure that block N012 will be skipped, make sure that Optional Input 3 is ON before block N010 is executed.

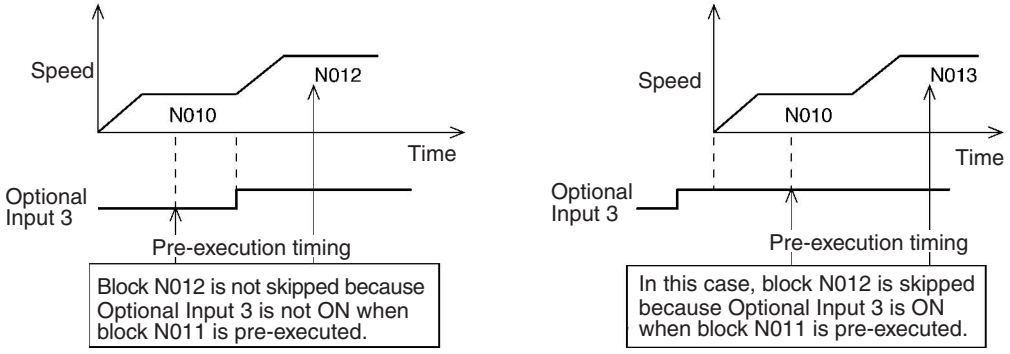

7-3-29 G76: OPTIONAL PROGRAM PAUSE

Pauses the program when the specified optional input is ON.

Format

G76□<optional number>

Operands

The following table shows the possible settings for the operands.

Operand	Possible settings
Optional number	00 to 19

Description

If the specified input is ON when this command is executed, program execution will be paused. Program execution will continue from the next block when the optional input is reset. The source of the optional input depends on the optional number specified, as shown below.

0 through 15: Inputs from the PLC Interface Area
16 through 19: Inputs from general inputs 1 to 4

Program execution will continue normally if the optional input comes ON while the next block is being executed.

Programming Example

The following example shows pausing a linear interpolation operation by turning ON an optional input.

```
      :     :
N008  G11
N009  G91
N010  G01   X100
N011  G76   3
N012  G01   X100
      :     :
```

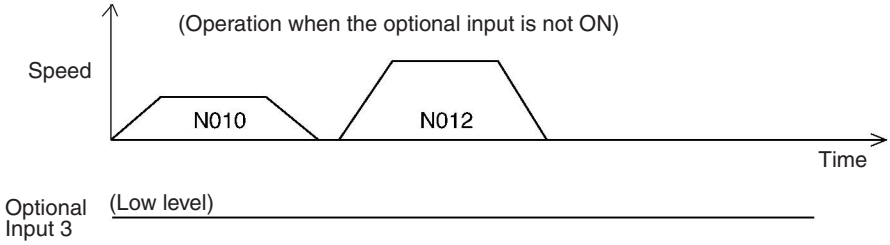

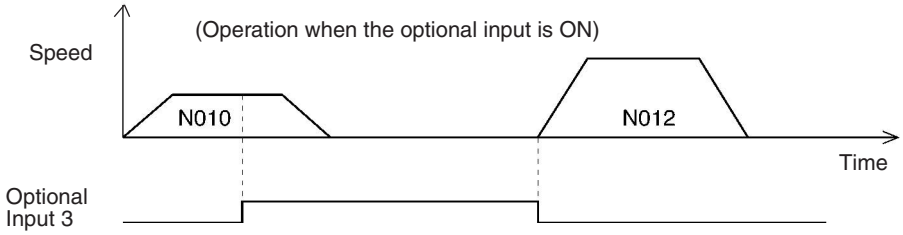

When block N008 contains the PASS MODE command (G10), blocks N011 and N012 are pre-executed while N010 is being executed, so the program will not be paused if Optional Input 3 is turned ON after execution of block N010.

To ensure that the program will be paused, make sure that Optional Input 3 is ON before block N010 is executed.

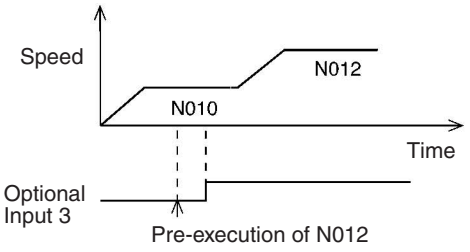

The program is not paused because Optional Input 3 is not ON when block N011 is pre-executed.

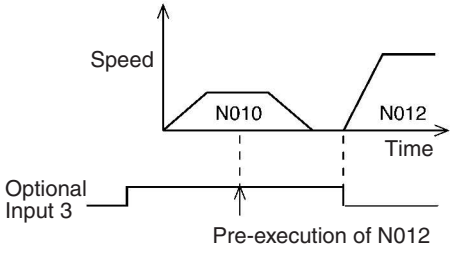

In this case, the program is paused because Optional Input 3 is ON when block N011 is pre-executed.

7-3-30 G79: PROGRAM END

Ends the main program.

Format

G79

Operands

None

Description

This command ends the main program and must be included at the end of the main program.

When G79 is executed and an axis is in operation, the Unit will wait for the axis to be positioned before executing G79. M codes M500 to M999 will be forcibly cleared if they are being output when G79 is executed.

Programming Example

The following example shows how G79 is executed after axis operation is completed in Pass Mode.

```
   :     :
N020     G10                Sets Pass Mode.
N021     G01   X100  Y100   F100
N022     G01   X200  F200
N023     G79                Executed after N022 is completed.
   :     :
```

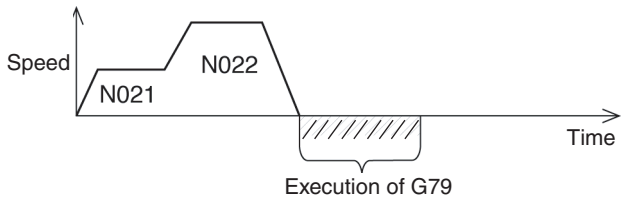

7-3-31 G90: ABSOLUTE SPECIFICATION

Specifies the use of absolute coordinates in axis operations.

Format

G90

Operands

None

Description

This command specifies that the absolute coordinate system for each axis is to be used when for axis positioning. After this command is executed, the coordinate data in axis movement commands is treated as absolute coordinate data.

In addition to G90, the absolute coordinate system is put into effect when a REFERENCE ORIGIN RETURN (G26), WORKPIECE ORIGIN RETURN (G27), or ORIGIN SEARCH (G28) command is executed.

Programming Example

The following example shows positioning with absolute coordinate data.

```
         :     :
N010     G90
N011     G01   X50   Y50   F100
N012     G01   X100  Y20
         :     :
```

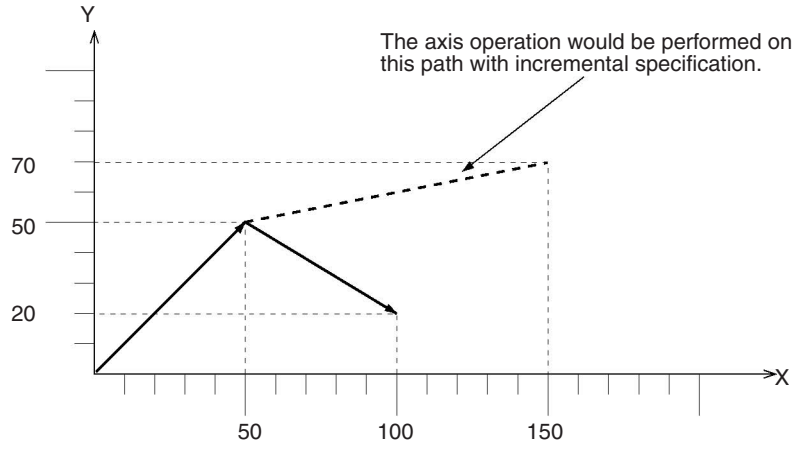

7-3-32 G91: INCREMENTAL SPECIFICATION

Specifies the use of relative coordinates in axis operations.

Format G91

Operands None

Description This command specifies that positioning axis operations are performed relative to the present position. After this command is executed, the coordinate data in axis movement commands is treated as the distance to be moved from the present position.

In addition to G91, the incremental coordinate system is put into effect when a REFERENCE ORIGIN RETURN (G26), WORKPIECE ORIGIN RETURN (G27), or ORIGIN SEARCH (G28) command is executed.

Programming Example The following example shows positioning with incremental coordinate data.

```
          :      :
N010      G91
N011      G01    X50    Y50    F100
N012      G01    X100   Y20
          :      :
```

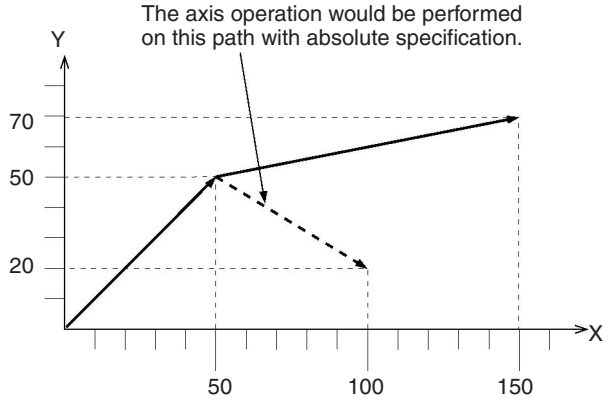

If positioning with incremental specification is interrupted by a pause command, the axes will be moved to the original end position after the operation is restarted. Also, if the axes have been moved or an origin search was performed after the operation was interrupted, the axes will still be moved to the original end position.

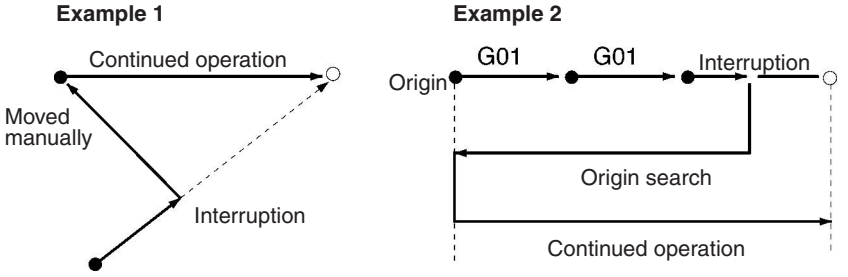

7-4 M Code Outputs

7-4-1 Introduction

M codes consist of information used to interlock with external devices in positioning operation processes. External devices are devices directly connected to the general outputs of the CPU Unit and MC Unit.

Format M<M code>

Example 1: M500
Example 2: G01 X100 MA000
Example 3: G01 X200 Y100 M(E00)

Operands

The following table shows the possible settings for the operands.

Operand	Possible settings
M code	00 to 999 (E00) to (E32) A0000 to A1999

Programming Example

The following program shows an example of M code usage.

```
N000    P100  X ..........  Declares the program number.
N001    G01   X100  F100    Moves to 100 mm on the X-axis by
                            linear interpolation.
N002    M100  ..........    Outputs M code 100 to the CPU Unit
                            and waits for OK to perform the next
                            operation.
                            Proceeds to next block when the M
                            code reset is received from the CPU
                            Unit.
N003    G01   X0 ........   Moves to 0 mm on the X-axis by lin-
                            ear interpolation.
N004    G79   ..........    Declares the end of the program.
```

Timing Chart

The following diagram shows the timing of the programming example execution. The Axis Operating, M Strobe, M Code, and M Code Reset Bits are provided in the PLC Interface Area.

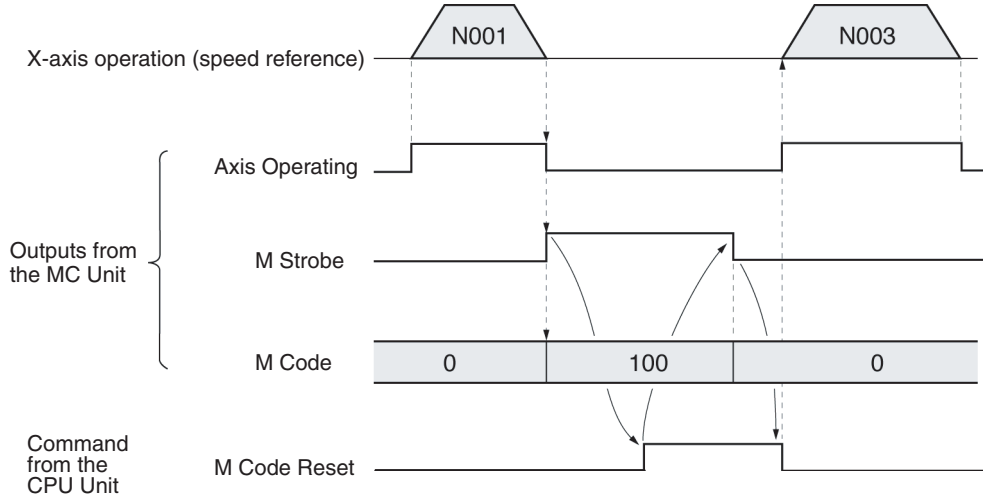

Description

The following list provides a running description of the program execution.

1,2,3...

1. In block N001, the X-axis is moved to 100 mm by linear interpolation.
2. In block N002, M code 100 is output after the X-axis positioning is completed; the M strobe is turned ON at the same time to indicate that the M code has been set.
3. In the CPU Unit, the processes corresponding to M code 100 are performed when the M strobe goes ON. The CPU Unit turns ON the M Code Reset Bit when these processes are completed.
4. In the MC Unit, the M code is cleared to 0 and the M strobe is turned OFF when the CPU Unit turns ON the M Code Reset Bit.
5. When the M Code Reset Bit from the CPU Unit goes OFF, block N003 is executed, moving the X-axis to 0 mm.

6. The program ends in block N004.

7-4-2 M Code Data

There are some M codes that interlock as explained on the previous page, and others that do not interlock. These differences are explained below.

When an M code is specified in a register or position data address, the specified value will be rounded to the nearest integer value. An error will occur if the result is not an acceptable M code value (0 to 999).

M Codes 0 to 499

M codes 0 to 499 are used to interlock with external devices. Execution of the program is paused when there is not an M code reset input.

M Codes 500 to 999

Use M codes 500 to 999 when it is not necessary to interlock. These M codes are just output and the program is executed without waiting for an M code reset input.

These M codes are cleared when the PROGRAM END command (G79) is executed.

7-4-3 M Code Examples

M codes can be used independently or with G codes, such as G00 and G01, that execute axis operations.

Example

The following program just outputs M code 600. (M codes over 499 do not interlock.)

```
N000     P000  X
N001     G01   X100  F100  M600
N002     G01   X200  F100
N003     G79
```

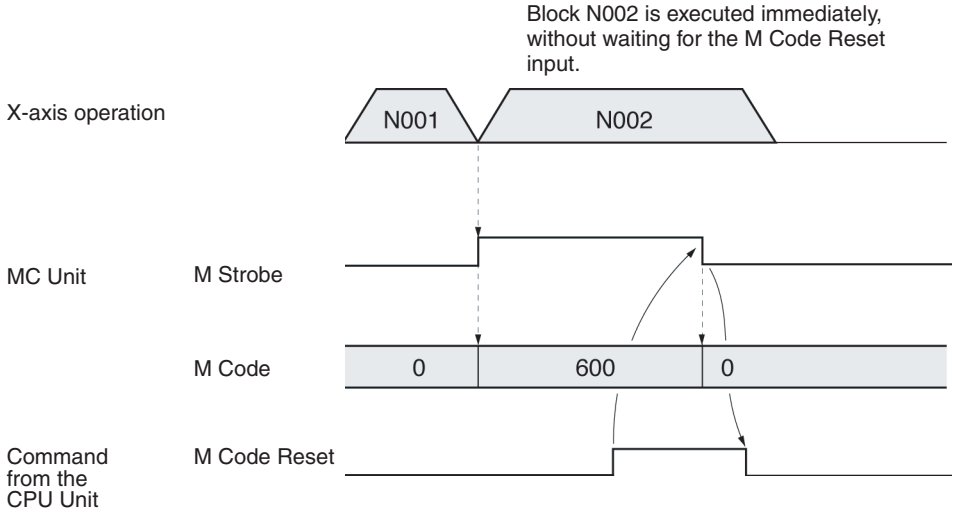

7-4-4 Effect of Mode Changes on M Code Resets

The status of M codes is not affected by switching from manual to automatic mode or vice versa.

7-4-5 Clearing M000 to M499 with Forced Block End or G74

The M strobe and M code outputs for M codes 000 to 499 will be cleared if the program block that outputs the M code is cleared with the Forced Block End Bit (PLC Interface Area) or the OPTIONAL END (G74) command.

Example 1

The M strobe and M code will not be output if a Forced Block End signal is received before they are output.

```
G00       X500  M100
```

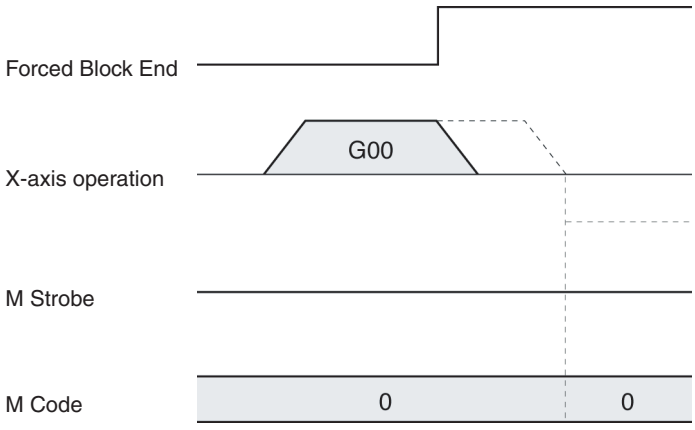

Example 2

The M strobe and M code will not be output if the OPTIONAL END command's optional input is received before they are output.

```
G74       3
G00       X500  M100
G01       X1000
```

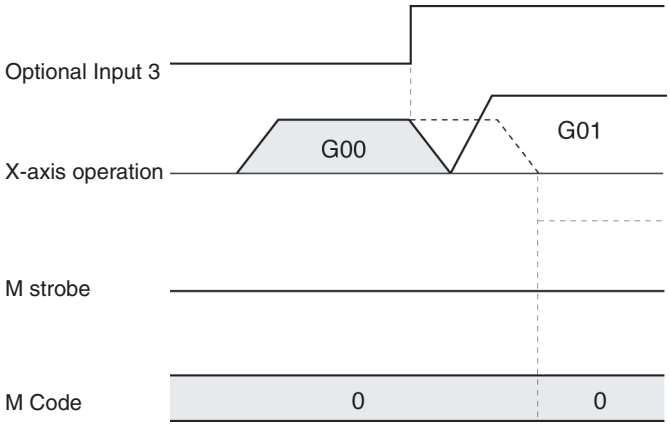

Example 3

When the output has been completed and the system is set to wait for the M code reset, the M strobe will be turned OFF and the M code will be cleared to release the M code reset.

```
G00       X500  M100
```

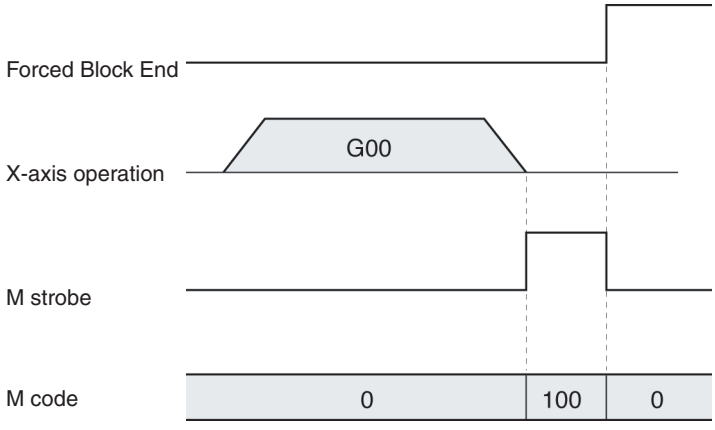

Example 4

The M strobe and M code will be cleared if the OPTIONAL END command's optional input is received while they are being output.

```
G74      3
G00      X500  M100
G01      X1000
```

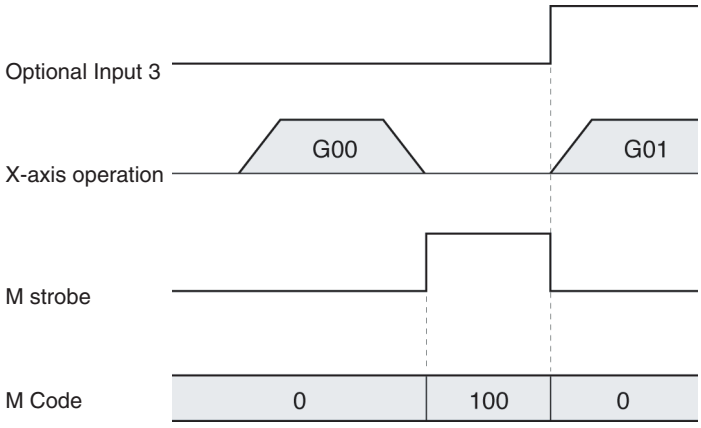

7-4-6 Clearing M500 to M999 with Forced Block End or G74

The M strobe and M code outputs for M codes 500 to 999 will not be output cleared if the program block that outputs the M code is cleared with the Forced Block End Bit (PLC Interface Area) or the OPTIONAL END (G74) command, but previous M codes will not be cleared.

Example 5

The M strobe and M code will not be output if a Forced Block End signal is received before they are output, but a previous M code and M strobe will not be cleared.

```
M700
G00      X500  M600
```

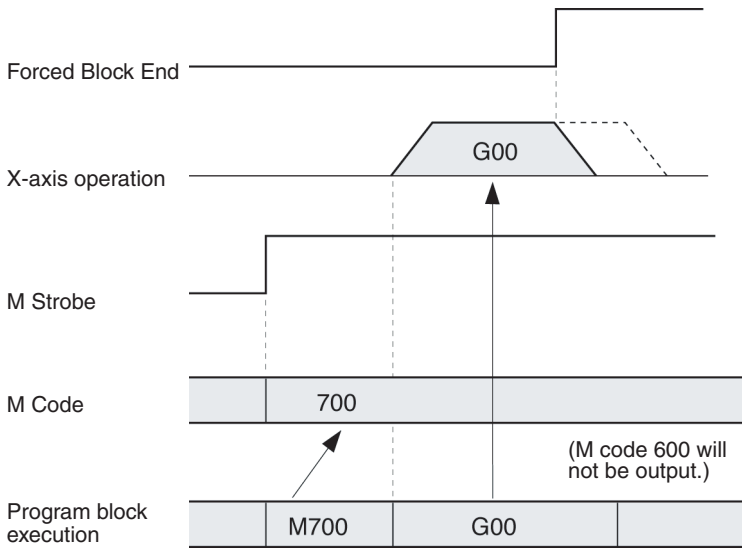

Example 6

The M strobe and M code will not be output if the Optional End command's optional input is received before they are output, but a previous M code and M strobe will not be cleared.

```
M700
G74      3
G00      X500  M600
G01      X1000
```

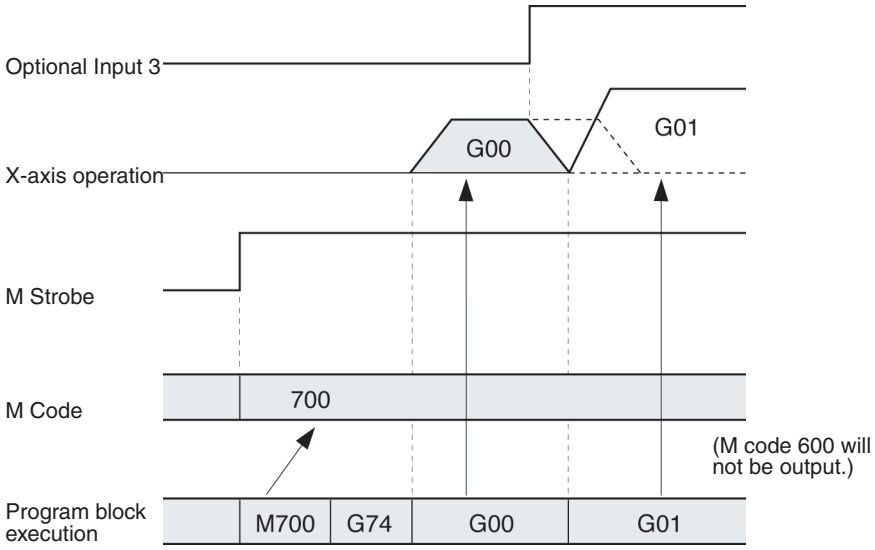

7-4-7 M Code Outputs in Pass Mode

M codes M500 to M999 can be output in Pass Mode while axes are being operated. In this case, M codes will be output at the following positions according to the system parameter settings.

Constant Acceleration Mode OFF

The M code will be output just before the demand position. The output position can be calculated using the following equation.

Demand position - reference speed x pass time / 2

The pass time is determined by the Pass Time Mode Selection settings in the system parameters as follows:

The pass time is the interpolation acceleration time when interpolation acceleration time is selected.

The pass time is the interpolation deceleration time when interpolation deceleration time is selected.

Constant Acceleration Mode ON

The M code will be output at the demand position.

Refer to *6-8 Operating Modes* for details on the Constant Acceleration Mode.

Example 1 **Constant Acceleration Mode OFF**

The following program will output an M code during pass operation. The M code is reset from the CPU Unit.

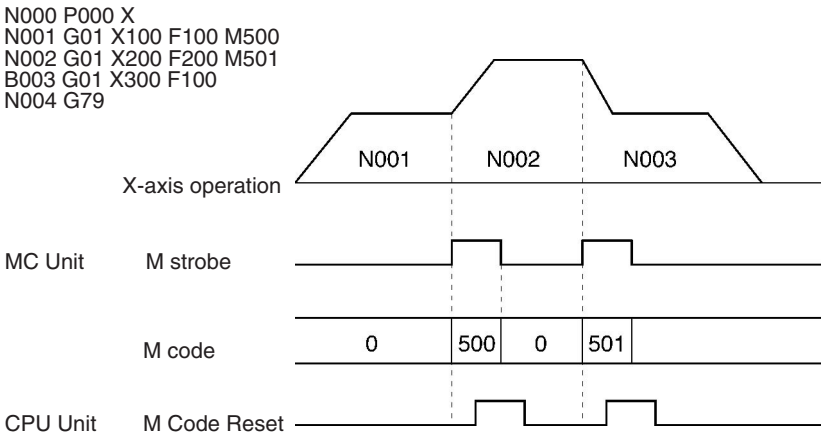

Example 2 **Constant Acceleration Mode ON**

The following program will output an M code during pass operation. The M code is reset from the CPU Unit.

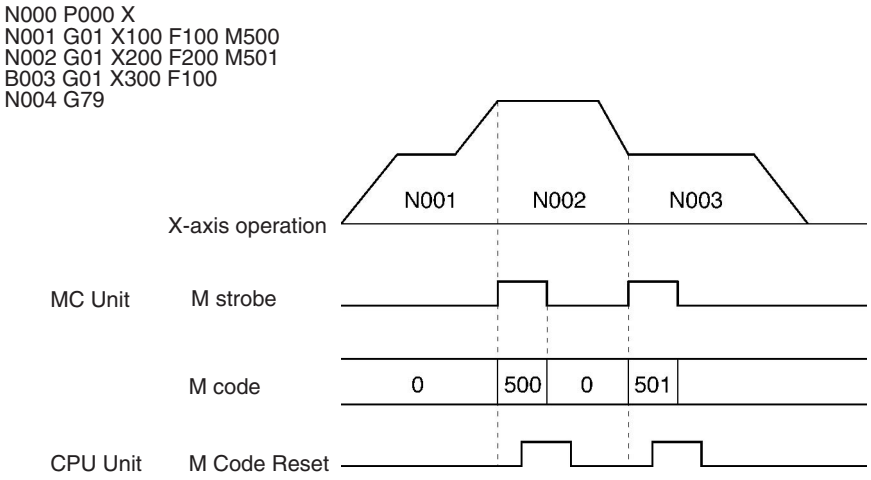

7-4-8 Stopover Function and Resetting M Codes

This section describes the reset timing for M codes when the Stopover function is used. Refer to *7-4-3 M Code Examples* for details on the Stopover function.

M000 to M499

When an M code between M000 and M499 is output, the next positioning operation will be performed after positioning to the demand position has been completed in either Pass Mode or In-position Check OFF Mode.

Example 1

The following program outputs M code 100 during linear interpolation (N001). The CPU Unit turns the M Code Reset Flag ON and OFF to reset the M code while N001 is executing. When that happens, the next positioning operation (in N002) is performed after the axis has moved 100 mm on the X axis.

```
N000 P000 X
N001 G01 X100 F100 M100/X30   Outputs M code 100 after the axis has moved 30 mm from the present position.
N002 G01 X200 F200
B003 G79
```

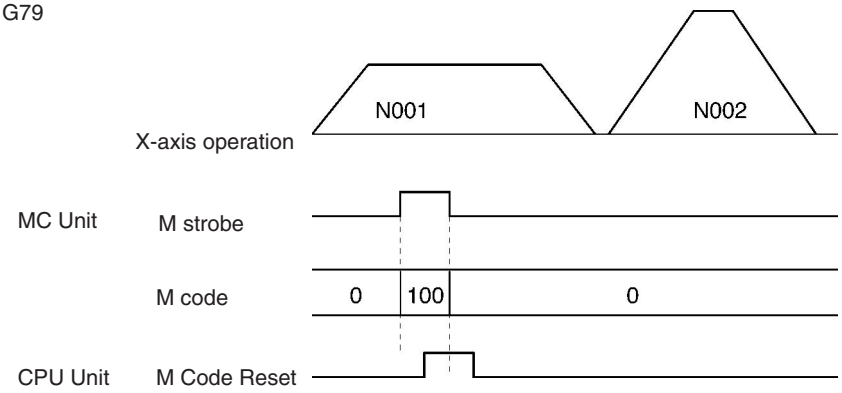

Example 2

The following program outputs M code 100 during linear interpolation (N001). The Unit will wait for the M Code Reset Bit to turn ON after positioning has been completed because the Bit was not input while N001 was executing. The CPU Unit turns the M Code Reset Bit ON and OFF to reset the M code. When that happens, the next positioning operation (N002) is performed.

```
N000 P000 X
N001 G01 X100 F100 M100/X30   Outputs M code 100 after the axis has moved 30 mm from the present position.
N002 G01 X200 F200
B003 G79
```

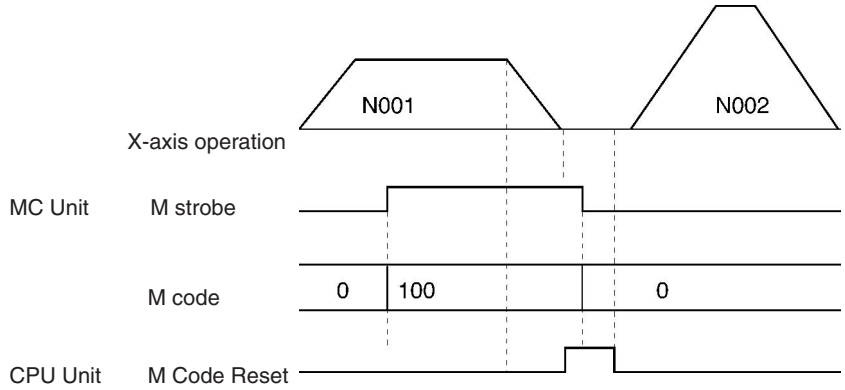

M500 to M999

The M code is reset with the same timing used to output M code in Pass Mode.

Note Refer to *7-4-7 M Code Outputs in Pass Mode in Pass Mode* for more details.

7-4-9 D Code Outputs

D Codes

A D code is a preset code that is output after positioning has been completed. The D code (0 to 255) is output to the CPU Unit as an interrupt task number to executed the interrupt task in the CPU Unit. It can also be output during operation without stopping operation by using the Stopover Function. Refer to *6-10 Stopover Function* for details on the function.

⚠ **Caution** D code outputs can only be used when an MC Unit is mounted on the CPU Backplane. They cannot be used if the Unit is mounted on an Expansion Backplane.

Format

D <D code>

```
Case 1: N010   D100
Case 2: N010   G01    X100   F200   D100
Case 3: N010   G01    X100   F200   M50    D100
```

Operands

D code
0 to 255
(E00) to (E32)
A0000 to A1999

Description

- The D code must be between 0 and 255.
- The following can be written after the D.
  - A number: 0 to 255 (integer)
  - (E00) to (E31)
  - A0000 to A1999
- The output timing for D codes is the same as that for M codes.
- D codes, like M codes, can be used with G codes. Only one or the other can be used at a time with a G code for stopovers.
- When a D code is output, the CPU Unit determines whether it can receive an interrupt. If it cannot receive an interrupt, then it will monitor status for 10 ms. If reception is still not possible, the CPU Unit will output a D code timeout error and stop.
- If a D code is output from more than one task at the same time, then outputting the D code for each task will be offset in 2 to 10-ms increments.

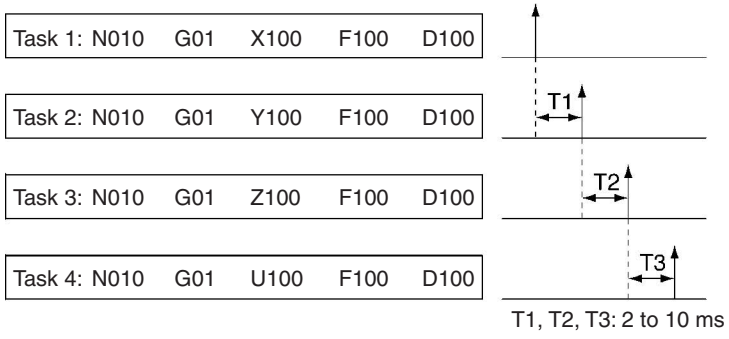

Operating Patterns

Case 1: Notification after Positioning Is Completed

```
N010  G01  X100  F100  D100
```

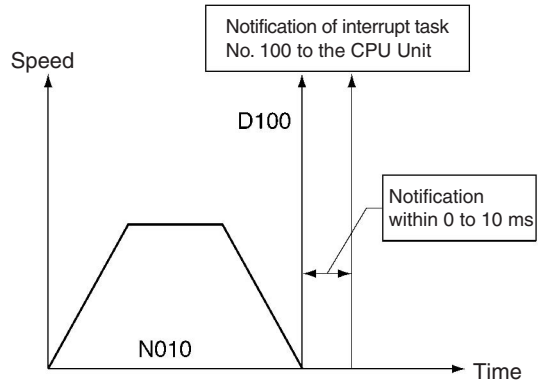

Case 2: Pass Mode Operation

```
N010  G01  X100  F100  M600  D100
N020  G01  X200  F200
```

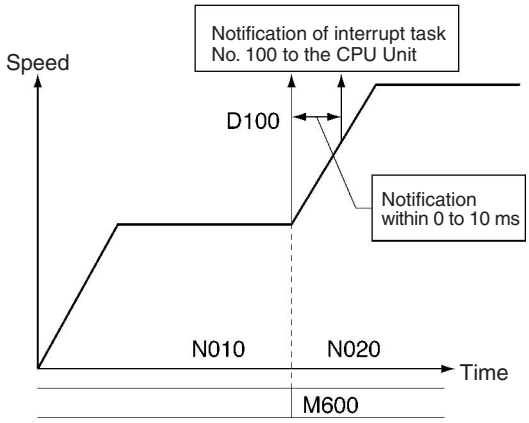

Case 3: CPU Unit Cannot Receive Interrupts during Pass Mode

```
N010  G01  X100  F100  M600  D100
N020  G01  X200  F200
```

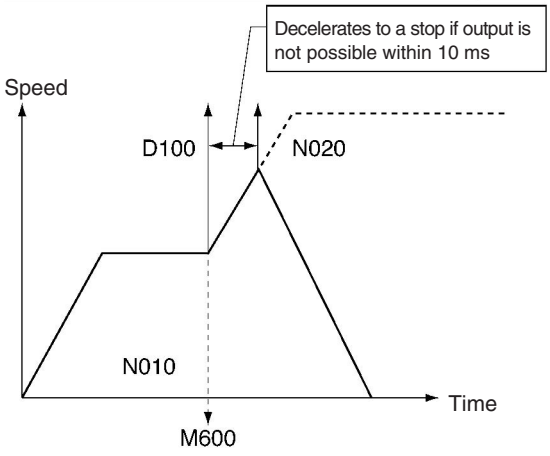

Case 4: Continuous Interrupt Tasks Initiated

```
N010  G01  X100  F100  M600  D100
N020  G01  X200  F200  D200
N030  G01  X300  F300
```

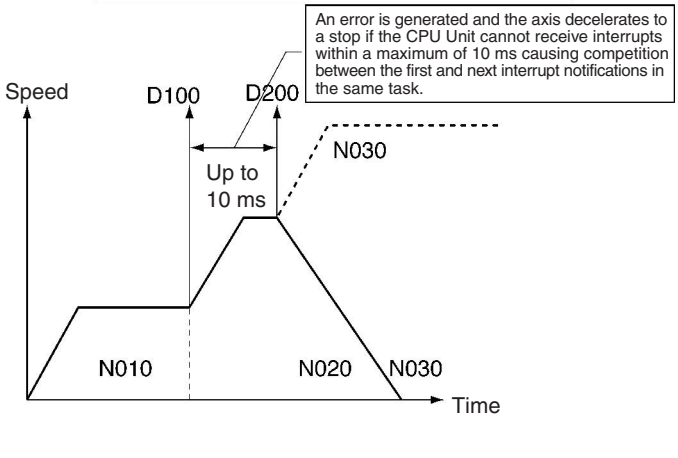

7-4-10 Stopover Function

The Stopover function outputs M code or D code without stopping operation when the axis is moved a preset amount (judged from the present position) in axis operation. It is used to control peripheral devices prior to completing a move and to improve tact time. The function can be used with G codes for all operations and with either a D code or a M code, but not both at the same time.

Format

M <M code>/<Stopover> or D <D code>/<Stopover>

Case 1: N010 G01 X200 F200 D100/X100 Outputs D code 100 after moving the axis 100 mm on the X axis.

Case 2: N010 G01 X200 F200 M600/X100 Outputs D code 600 after moving the axis 100 mm on the X axis.

Operands

Stopover	
Axis	Coordinate data (travel distance)
X Y Z U	0 to 39999999 (E00) to (E32) A0000 to A1999

Description

The Stopover function outputs a M code or D code when the axis moves a certain amount (judged from the present position) after the axis starts to move from the present position to the demand position. The travel distance (relative movement) is always specified in as a positive value.

The Stopover function is used with the following G codes for positioning.

G00	POSITIONING
G01	LINEAR INTERPOLATION
G02	CLOCKWISE CIRCULAR INTERPOLATION
G03	COUNTERCLOCKWISE CIRCULAR INTERPOLATION
G26	REFERENCE ORIGIN RETURN
G27	WORKPIECE ORIGIN RETURN
G28	ORIGIN SEARCH
G31 (See note.)	INTERRUPT FEEDING
G32	TRAVERSE

Note With the G31 code, the Stopover function becomes valid after the general input turns ON.

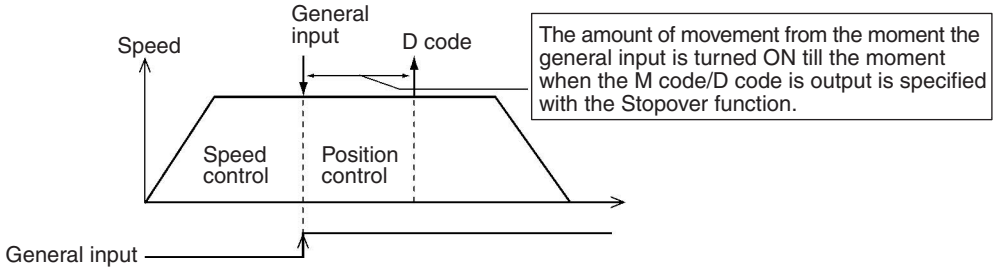

For G codes in which more than one axis moves, such as in multiturn circular interpolation and traverse operations, the Stopover function is executed only once during execution of the G code.

Example

The following program outputs M code 500 after the axis has moved 50 mm in the Y-axis direction when the traverse operation shown below (traverse width: 100 mm, number of windings per layer: 10, number of winding layers: 10) is performed. No D code will not be output beyond that point.

```
G32     X36000   Y100   F1000    L10  M500/Y50
```

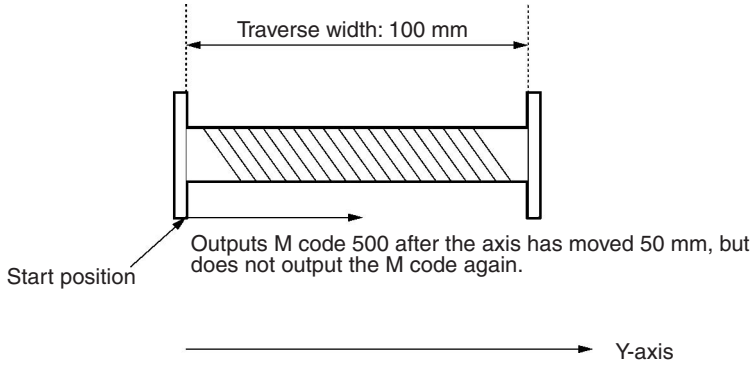

The following program outputs a M code or D code when the axis has moved the specified amount from the preceding demand position when the Stopover function is used in Pass Mode or In-position Check OFF Mode.

Example: (X, Y) = (30, 30)

```
      :      :
N110  G10                                  Pass Mode specified
N120  G01    X130  Y30   F100             Move to (X, Y) = (130, 30)
N130  G01    X130  Y130  M600/Y50
```

N130 is preread during execution of N120 because the system is in Pass Mode. M code 600 is thus output after moving 50 mm from Y30 (the demand position for N120) to 80 mm (determined from the present position).

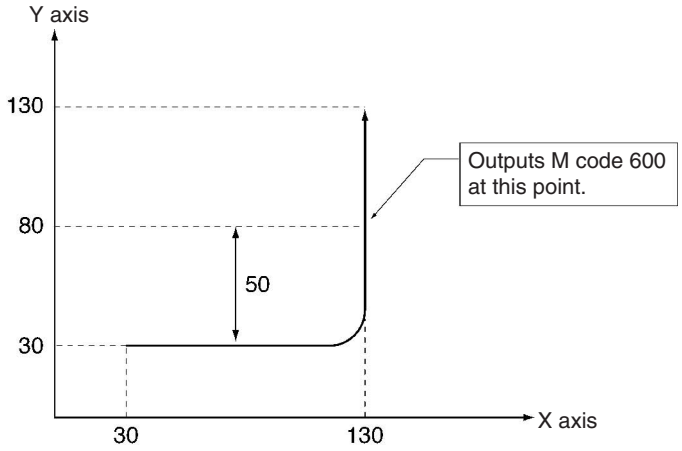

The following occurs with circular interpolation.
The D code is output when the axis has moved –70 mm on the X axis during circular interpolation as shown in the following figure.

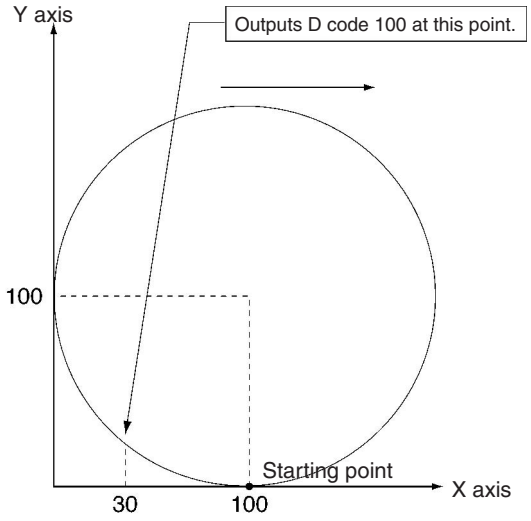

7-4-11 Precautions on the Stopover Function

Heed the following precautions when using the Stopover function.

- Normally, the Stopover function is not valid if the specified distance moved is the same as the next demand position.

Example

```
N0100  G00   X100
N0110  G00   X200   M500/X100
```

If the specified distance is 100 mm which is the same as the distance from X100 to X200, then the Stopover function will not be valid after the axis has moved to demand position X200.

M code 500 will be output if the travel distance exceeds 100 mm (large X-axis overshoot) before the demand position X200 is obtained.

- The Stopover function may not be valid in operations where the axis moves back and forth between two points in Pass Mode.

Example

```
N000   P000   X
N010   G01    X1000F<High-speed feed rate>D100/X900
N020   G01    X0
```

High-speed feed Rate

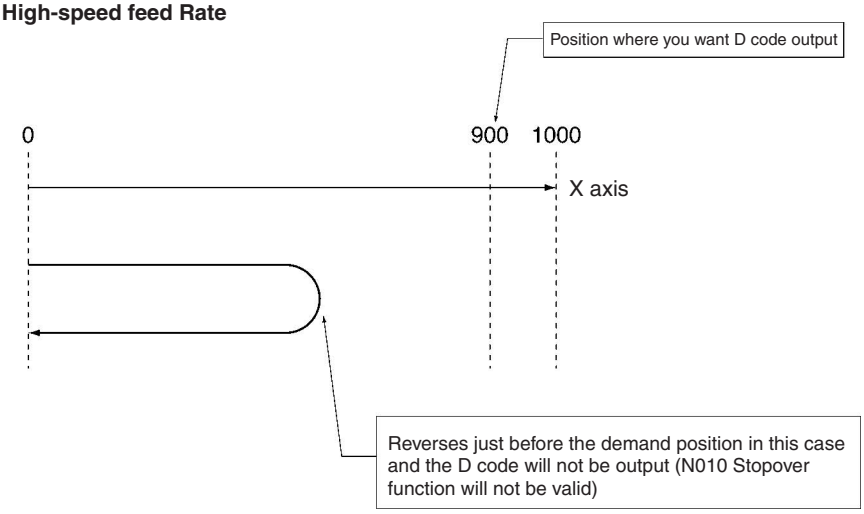

Slow Feed Rate

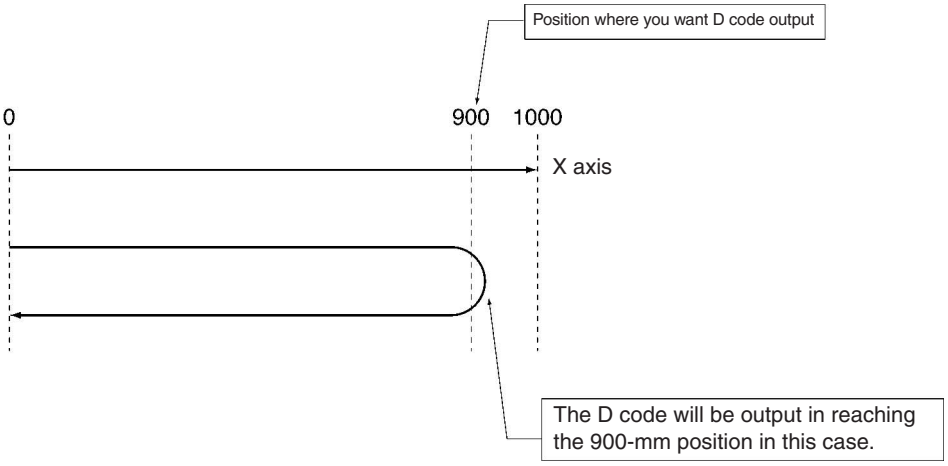

SECTION 8
G-Language Programming Examples

This sections provides examples of G-language programming for the CS1W-MC421/221.

8-1 Programming Examples 446
8-1-1 Positioning with PTP Control 446
8-1-2 Positioning with Linear Interpolation 447
8-1-3 Positioning with Linear and Circular Interpolation 448
8-1-4 Indirect Addressing with Registers 449
8-1-5 Using the Workpiece Origin Offset 450
8-1-6 Changing the Interpolation Acceleration Time 451
8-1-7 Positioning while Calculating Position Data 453
8-1-8 Stopping a Program with a General Input 455
8-1-9 Stopping the Program and Substituting Position Data 455
8-1-10 Positioning a Turntable 457
8-1-11 Positioning with Improved Locus Accuracy in Circular Interpolation 459
8-1-12 Starting Peripheral Devices during Operation 460
8-1-13 Positioning at High Speed 461
8-1-14 Shifting from Aligned to Rough Winding 462
8-2 Executing MC Programs from the Ladder Program 462

8-1 Programming Examples

8-1-1 Positioning with PTP Control

Operation

Three positioning operations are performed and then the reference origin is returned to. An M code is output when positioning is completed.

1,2,3...

1. `X100 Y50` (Output M code 20.)
2. `X250 Y150`
3. `X300 Y200` (Output M code 700.)
4. Return to reference origin.

Programming Example

The following programming example performs the positioning operations listed above.

```
N000   P001   XY
N001   G00    X100   Y50    M20
N002   G00    X250   Y150
N003   G04    2
N004   G00    X300   Y200   M700
N005   G26    XY
N006   G79
```

Explanation

N001

Positions the axes to (X100, Y50) by PTP control. Absolute positioning (default) is used, because nothing is specified.

When positioning is completed, M code 20 is output and the Unit waits for a reset (M code reset standby).

N002

When the M code reset is received, block N002 positions the axes to (X250, Y150) by PTP control.

N003

Waits for 2 seconds.

N004

Positions the axes to (X300, Y200) by PTP control. When positioning is completed, M code 700 is output and the next block is executed without waiting for the reset.

N005

Returns the X and Y axes to the reference origin.

N006

Ends the program. When M code 700 is being output, it is forcibly cleared by the PROGRAM END command.

Timing Chart

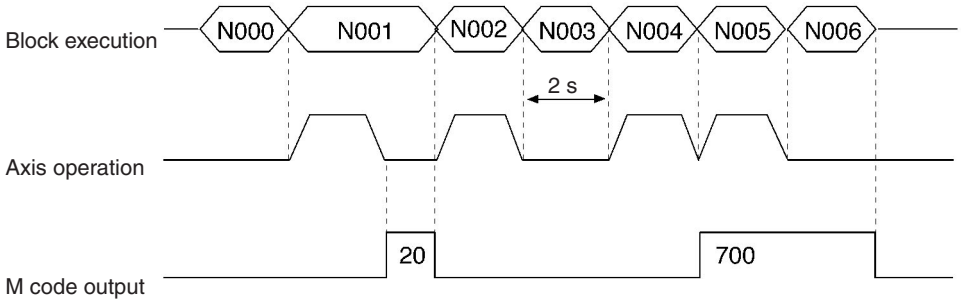

8-1-2 Positioning with Linear Interpolation

Operation

When the optional input turns ON, this program uses linear interpolation to move the X-axis by 300 and the Y-axis by 400 from the present position. This positioning operation will be repeated (up to 21 times) until position data address A1000 contains 1.

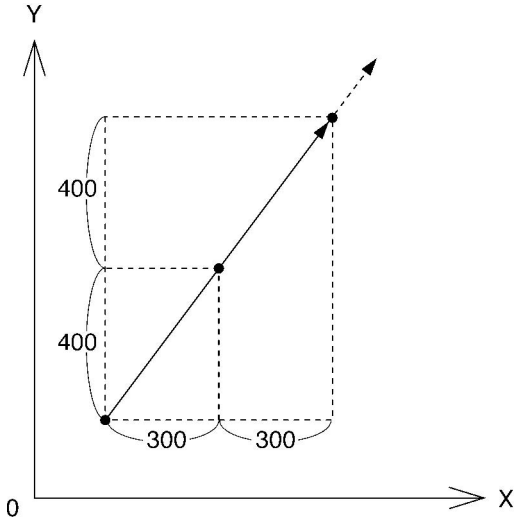

Programming Example

```
N000   P002   XY
N001   G91
N002   G01    X300   Y400   F50    #16
N003   G71    N005/A1000=1
N004   G70    N002/L20
N005   G79
```

Explanation

N001

Specifies incremental positioning.

N002

Waits until optional input 16 (general input 1) turns ON. When it turns ON, the X-axis is moved by 300 and the Y-axis by 400 with linear interpolation at a speed of 50.

N003

Checks the content of A1000 and ends the program if it is 1.

N004

Jumps to block N002. Block N004 will jump to N002 20 times (performing 21 positioning operations).

Note The operations above are performed in Stop Mode, and not Pass Mode, because an option is specified.

Timing Chart

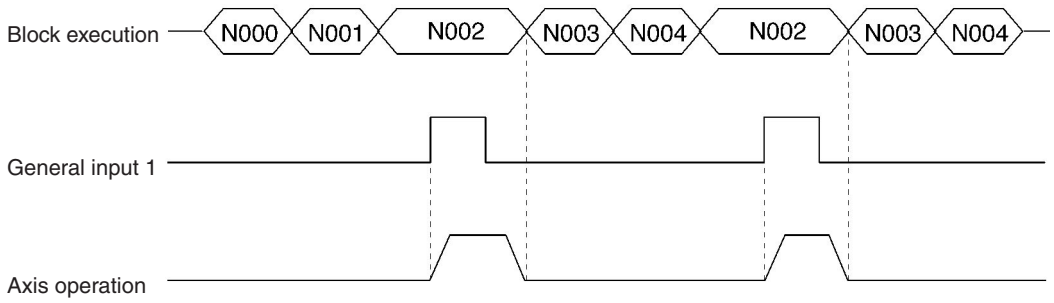

8-1-3 Positioning with Linear and Circular Interpolation

Operation

This program combines linear and circular interpolation to move the X and Y axes in the pattern shown in the following diagram.

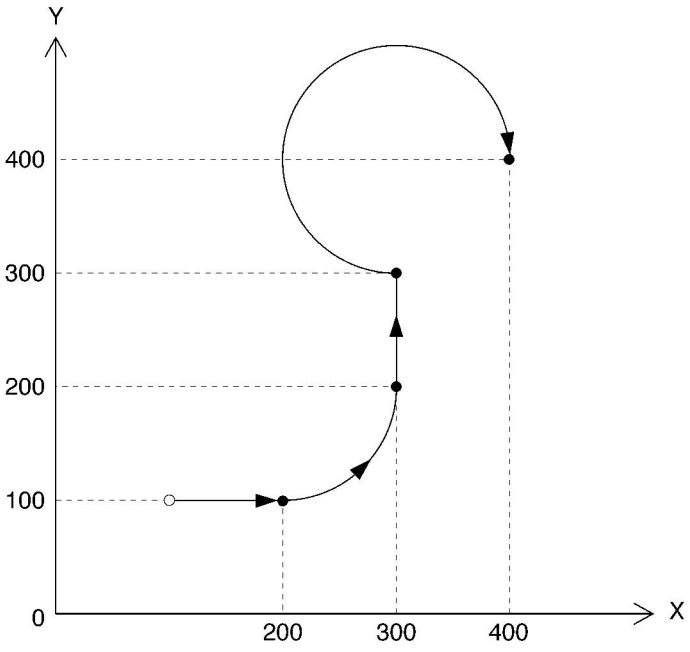

Programming Example

```
N000   P003   XY
N001   G17
N002   G01    X200   Y100   F50
N003   G03    X300   Y200   R100
N004   G01    Y300
N005   G02    X400   Y400   R-100
N006   G79
```

Explanation

N001

Sets the X-Y plane as the plane for circular interpolation.

N002

Moves the axes to (X200, Y100) by linear interpolation.

N003

Moves the axes to (X300, Y200) by circular interpolation in the counter-clockwise direction with a radius of 100. A positive value is specified for the radius, so an arc smaller than a semicircle (1/4 circle) is drawn.

N004

Moves the axes to (X300, Y300) by linear interpolation.

N005

Moves the axes to (X400, Y400) by circular interpolation in the clockwise direction with a radius of 100. A negative value is specified for the radius, so an arc greater than a semicircle (3/4 circle) is drawn.

8-1-4 Indirect Addressing with Registers

Operation

This program uses registers to indirectly specify position data stored in position data addresses and uses this data in positioning operations.

Programming Example

```
N000   P005    XY
N001   G11
N002   G63     E1=100
N003   G63     E2=101
N004   G01     X(E1)Y(E2)F100
N005   G60     E1=E1+2
N006   G60     E2=E2+2
N007   G75     3
N008   G70     N004/L3
N009   G79
```

Explanation

N001

Specifies Stop Mode.

N002 through N003

Set the initial position data addresses in the registers.

N004

Reads the position data from the addresses specified in the registers and moves the axes to this point by linear interpolation.

N005 through N006

Updates the contents of the registers.

N007

If optional input 3 is ON, the next block will be skipped and the program will end.

N008

Jumps to block N004 and repeats the positioning operation 3 times.

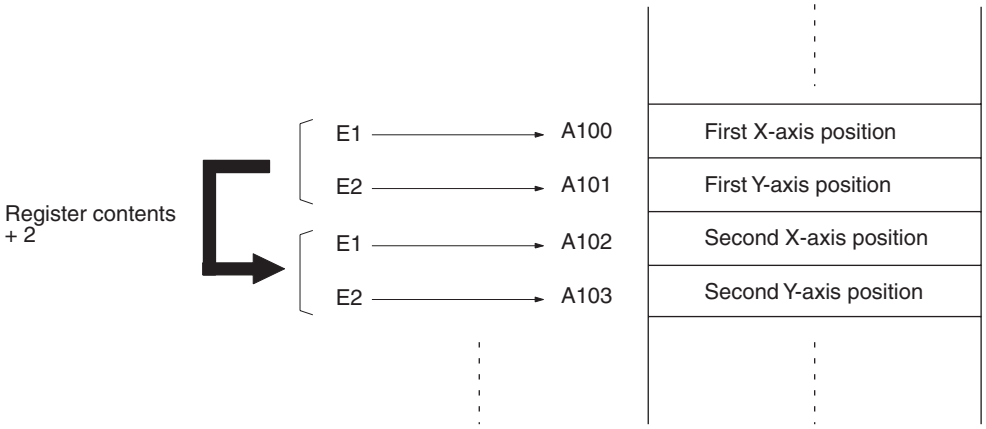

8-1-5 Using the Workpiece Origin Offset

Operation

Positioning for the same pattern can be performed any number of times by repeatedly changing the workpiece origin offset and calling the subroutine. Using the workpiece coordinate system is useful particularly for absolute positioning operations.

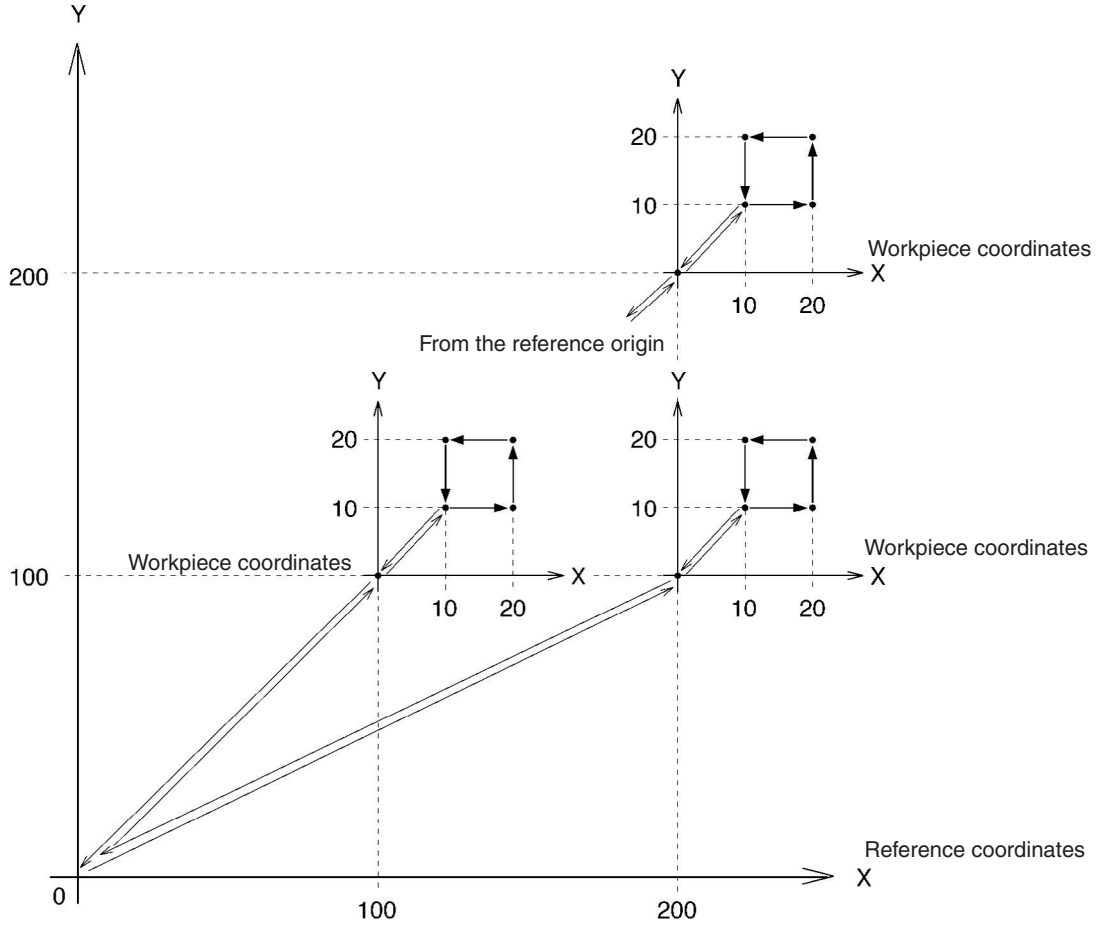

Programming Example

```
N000   P006   XY
N001   G53    X100   Y100
N002   G72    P800
N003   G53    X200
N004   G72    P800
N005   G53    Y200
N006   G72    P800
N007   G79
```

Subroutine

```
N000   P800   XY
N001   G27    XY     M10
N002   G01    X10    Y10    F10
N003   G01    X20
N004   G01    Y20
N005   G01    X10
N006   G01    Y10
N007   G27    XY     M20
N008   G26    XY     M30
N009   G73
```

Explanation

P006: N001

Sets the workpiece origin offset to (X100, Y100).

P006: N002

Calls subroutine P800.

P800: N001

Returns to the workpiece origin. The workpiece coordinate system is selected at this time. M code M10 is output and the Unit waits for the M code reset.

P800: N002 through N006

The subroutine's series of absolute positioning operations is performed by linear interpolation in Pass Mode.

P800: N007

Returns to the workpiece origin. M code M20 is output and the Unit waits for the M code reset.

P800: N008

When the reset is received, block N008 returns to the reference origin. M code M30 is output and the Unit waits for the M code reset.

P800: N009

When the reset is received, block N009 returns to main program P006.

P006: N003

Changes the workpiece origin offset to X200.

P006: N004

Calls subroutine P800 and repeats the same series of operations.

8-1-6 Changing the Interpolation Acceleration Time

Operation

This program changes the setting of the interpolation acceleration time parameter and performs linear interpolation.

Programming Example

```
N000   P007   XY
N001   G69    #3/X500
N002   G01    X100   0Y500  F300
N003   G01    X2000  Y-1000
N004   M20
N005   G69    #3/X100
N006   G01    X3000  Y1000
```

```
N007   G01    X4000  Y1500
N008   G79
```

Explanation

N001

Changes the setting of the X-axis' interpolation acceleration time parameter to 500 ms, which becomes the X-axis acceleration time used for interpolation in this task.

N002

Moves to (X1000, Y500) by linear interpolation with an acceleration time of 500 ms and speed of 300.

N003

Moves to (X2000, Y–1000) in Pass Mode with an acceleration time of 500 ms.

N004

Once the pass operation is completed, N004 outputs M code M20 and waits for the M code reset.

N005

Changes the setting of the interpolation acceleration time to 100 ms.

N006

Moves to (X3000, Y1000) by linear interpolation with an acceleration time of 100 ms.

N007

Moves to (X4000, Y1500) in Pass Mode with an acceleration time of 100 ms.

Timing Charts

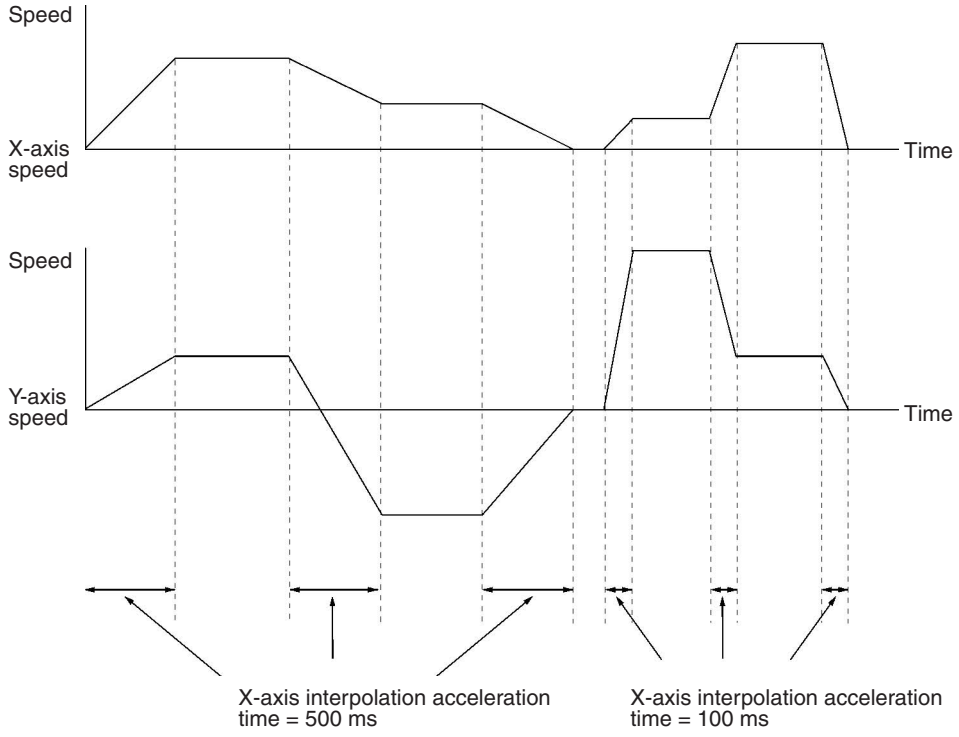

8-1-7 Positioning while Calculating Position Data

Operation

After initializing the position data, this program moves the axes 10 times while incrementing the X-axis' position data by 20. Next, the Y-axis position data is incremented by 30 and the positioning operation is repeated five times. The positioning will be in grid as shown in the following diagram.

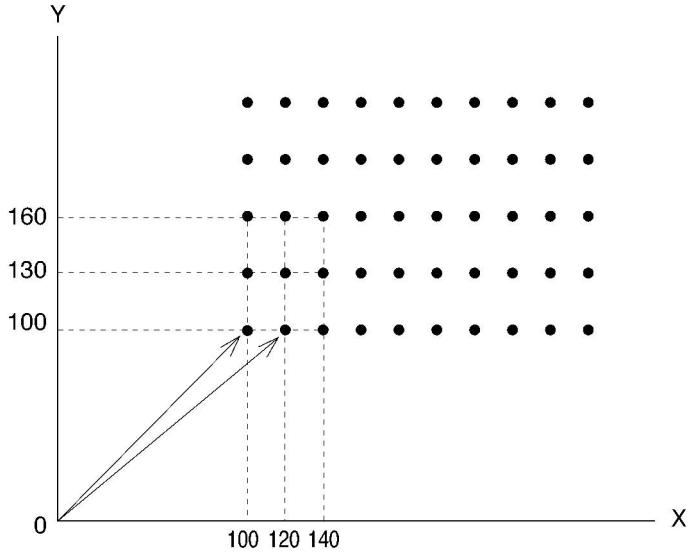

Programming Example 1

```
N000   P008   XY
N001   G11
N002   G63    E00=0
N003   G63    A1000=100
N004   G63    A1001=100
N005   G01    XA1000 YA1001 F20 M10
N006   G01    X0     Y0     F50
N007   G60    A1000=A1000+20
N008   G70    N005/L9
N009   G63    A1000=100
N010   G60    A1001=A1001+30
N011   G60    E00=E00+1
N012   G71    N005/E0 ! 5
N013   G79
```

Explanation

N001
Specifies Stop Mode.

N002
Initializes register E0 to 0.

N003
Substitutes the X-axis' initial position data into address A1000.

N004
Substitutes the Y-axis' initial position data into address A1001.

N005
Moves the axes by linear interpolation to the X position indicated in A1000 and the Y position indicated in A1001.

N006
Returns to the origin.

N007
Increments the X-axis' position data by 20.

N008

Jumps to block N004 and repeats the above process 9 times.

N009

Initializes the X-axis' position data to its original value.

N010

Increments the Y-axis' position data by 30.

N011

Uses register E0 as a loop counter with an initial value of 0. The content of E0 is incremented by 1.

N012

Jumps to N004 as long as the content of E0 is not 5. When E0=5, N012 proceeds to the next block and ends the program.

Note Register E0 is used as a loop counter in block N012 because loops cannot be nested as shown below.

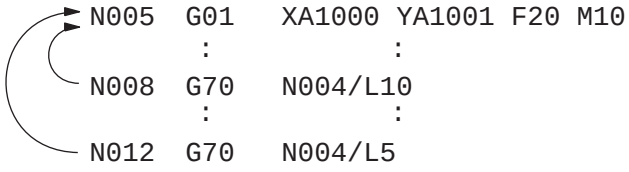

The loops in the example above will not operate properly. A subroutine can also be used for nesting, as shown in the following programming example.

Programming Example 2

```
N000   P008   XY
N001   G11
N002   G63    A1000=100
N003   G63    A1001=100
N004   G72    P700
N005   G63    A1000=100
N006   G60    A1001=A1001+30
N007   G70    N004/L4
N008   G79
```

Subroutine

```
N000   P700   XY
N001   G01    XA1000 YA1001 F20 M10
N002   G01    X0     Y0     F50
N003   G60    A1000=A1000+20
N004   G70    N001/L9
N005   G73
```

Explanation

Blocks N005 through N008 in programming example 1 have been converted to subroutine format in subroutine P700, which is called from step N004 in main program P008. SUBROUTINE END (G73) is required at the end of the P700.

8-1-8 Stopping a Program with a General Input

Operation

This program shows how to stop MC program execution when general input 1 turns ON.

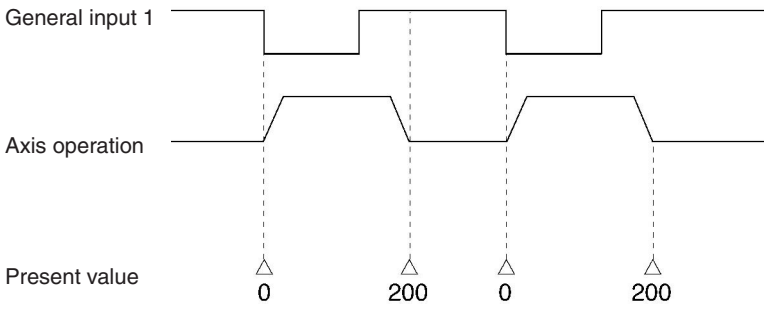

Programming Example

```
N000   P009   X
N001   G11
N002   G76    16
N003   G54    X0
N004   G01    X200   F100
N005   G70    N001
N006   G79
```

Explanation

N001

Specifies Stop Mode.

N002

Stops execution when general input 1 turns ON. (Proceeds to the next block when general input 1 is OFF.)

N003

Presets the X-axis' present value to 0.

N004

Absolute positioning of the X axis.

N005

Unconditionally jumps to block N001, repeating blocks N001 through N004. The process can be repeated indefinitely without an overflow because the present value is preset to 0 each time.

8-1-9 Stopping the Program and Substituting Position Data

Operation

This program moves the X axis to X1000 at a speed of 100 by linear interpolation. The movement will be decelerated to a stop by the G74 (OPTIONAL END) command if the target position is reached before the positioning operation is completed.

The X position when the movement was stopped will be stored in address A500 and that position data will be used for later positioning operations. This process is useful for applications in which the position where the operation

was stopped will be used for positioning rather than the original target position.

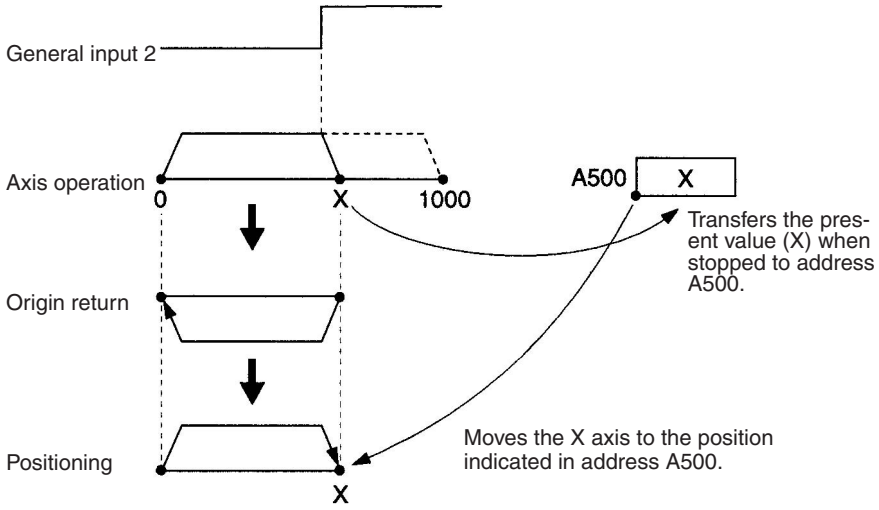

Programming Example

```
N000    P010    X
N001    G11
N002    G74     17
N003    G01     X1000   F100
N004    G63     A500=X
N005    G01     X0
N006    G01     XA500
N007    G70     N005
N008    G79
```

Explanation

N001

Specifies Stop Mode.

N002

Execution of the next block is stopped when general input 2 turns ON.

N003

Moves the X axis with a maximum target position of X1000. The positioning operation will be decelerated to a stop if general input 2 turns ON before positioning is completed.

N004

The stopping position is stored in address A500.

N005

Returns to the origin.

N006

Positions the X axis using the position data stored in address A500 in block N004.

N007

Jumps to N005 and repeats the positioning operation.

8-1-10 Positioning a Turntable

Operation

This operation positions a turntable using the unlimited feed mode and various arithmetic commands. Positioning is performed while judging whether to move clockwise or counterclockwise to arrive at the target position. Target positions are specified between 0° and 360° and the present position will return to zero if a target position is specified outside that range.

Use the following procedure to specify positioning from the CPU Unit.

1,2,3...

1. Use the IOWR instruction to write the target position into address A0000 between 0° and 360°.
2. After the target position is specified, turn ON optional input zero and the turntable will be positioned at the target position.
3. M code 0001 will be output after positioning is completed. Check the M code, turn OFF optional input zero and turn the M code reset ON and OFF.
4. Repeat steps 1 to 3.

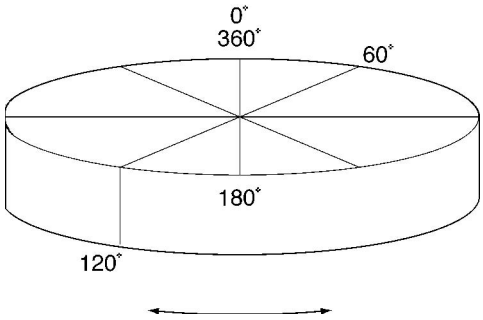

Programming Example

```
N000   P000   X
*001
*002   Target position=A0000, reference position (program
setting)=A0001
*003   Present position (used internally)=A0100, work mem-
ory=A0101,A0102
*004
*005   Set the target position into A0000 by IOWR instruc-
tion.
*006   Waits until optional number zero turns ON.
*007
N008   G75    00
N009   G70    N008
*010
*011   Positions approximately.
*012
N013   G63    A0100=X
N014   G60    A0102=A0000–A0100
N015   G71    N020/A0102<–180
N016   G71    N022/A0102<180
N017   G71    N024/A0102<360
N018   G60    A0102=A0102–360
N019   G70    N015
N020   G60    A0001=A0000+360
N021   G70    N025
N022   G63    A0001=A0000
N023   G70    N025
N024   G60    A0001–A0000–360
N025   G00    XA0001        M001
```

```
N026    G70     N008
N027    G79
```

Explanation

Block N000 declares the program number and axis being used.

***001 to *007**

Comments.

N008 and N009

Waits until optional input zero turns ON. When the input turns ON, unconditional jump N009 is disabled and the next block is executed (*010).

***010 to *012**

Comments.

N013

Substitutes the X-axis position into A0100.

N014 to N017

Determines whether to perform positioning in the clockwise or counterclockwise direction based on the target position (A0000) and the present position (A0100), and then jumps to individual processes.

N018 and N019

Corrects to a target position within one revolution if a target position of more than one revolution is specified, and restarts positioning from N014.

N020 to N024

Turns the turntable clockwise or counterclockwise and calculates target position A0001 where the turntable will be positioned.

N025

Positions the turntable at the target position and then outputs M code 0001 and turns ON the M strobe, and then waits for M code reset from the CPU Unit.

N026

After the M code reset from the CPU Unit has turned ON and OFF, jumps to the process for waiting for optional input zero to turn ON.

System Parameter Settings

The following system parameter settings must be made.

- Minimum setting unit — Set for the user's system.
- Axis mode — Set to Unlimited Feed Mode.
- Software limits — Set between 0° and 360°. If the minimum setting unit is 0.1, then the present position will be updated between 0.0° and 359.9°.

Note In the above application, set the encoder resolution and pulse rate so that a revolution (360°) is an integer when it is converted to pulses.

If positioning that passes though 0°, such as passing through 0° to shift the position from 350° to 10° or passing through 0° to shift the position from 10° to 350°, is performed repeatedly in a system that generates a remainder when a revolution (360°) is converted to pulses, an error of less than one pulse will occur per revolution.

Work within the allowable range for accuracy and execute ORIGIN SEARCH for each operation in systems like that described above.

8-1-11 Positioning with Improved Locus Accuracy in Circular Interpolation

Operation

This operation is essentially the same as described in *8-1-3 Positioning with Linear and Circular Interpolation* except that locus accuracy in the circle will be improved. When performing circular interpolation, the axes will follow the inner side of the expected circle as the feed rate increases. Locus accuracy will be improved by increasing the feed forward gain of the X and Y axes using G69 (change parameter). Normally overshooting will occur when the axes stop or when the target position is inverted if the feed forward gain in the servo system is increased too much. Therefore, set the feed forward gain to 20% for linear interpolation-only operation and 60% for circular interpolation-only operation.

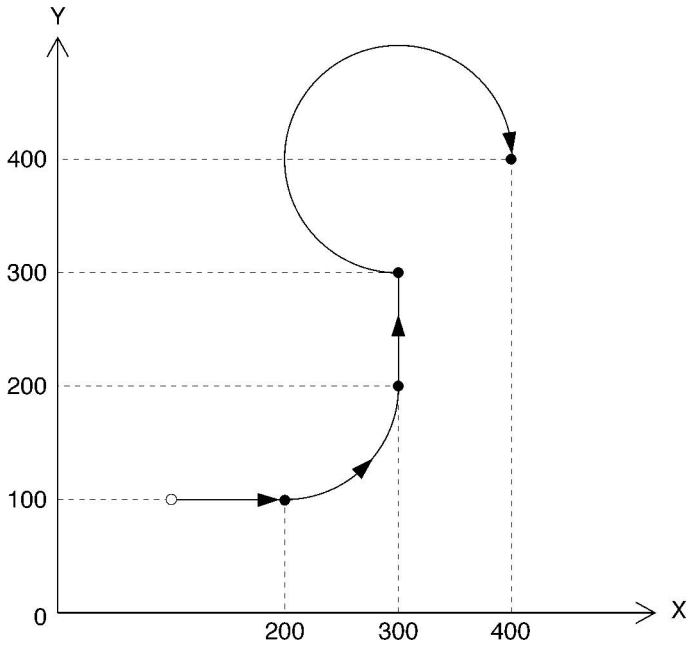

Programming Example

```
N000   P003   XY
N001   G17
N002   G69    #6/X20          Y20
N003   G01    X200    Y100    F50
N004   G69    #6/X60          Y60
N005   G02    X300    Y200    R100
N006   G69    #6/X20          Y20
N007   G01    Y300
N008   G69    #6/X60          Y60
N009   G02    X400    Y400    R-100
N010   G79
```

Explanation

N002, N006: Sets feed forward gain for the X and Y axes to 20% for linear interpolation operation.
N004, N008: Sets feed forward gain for the X and Y axes to 60% only for circular interpolation operation.

See *8-1-3 Positioning with Linear and Circular Interpolation* for details on other settings.

8-1-12 Starting Peripheral Devices during Operation

Operation

Peripheral devices can be started at high speed from the MC Unit using the MC Unit stopover function or interrupt notification function (D code) as well as a CPU interrupt task. This program allows high-speed synchronous applications to be created, because it is able to control peripheral devices without pausing operation.

The following program turns ON three valves (1, 2 and 3) during two-axis linear interpolation when the present positions on the X axis are 250, 500 and 750 mm.

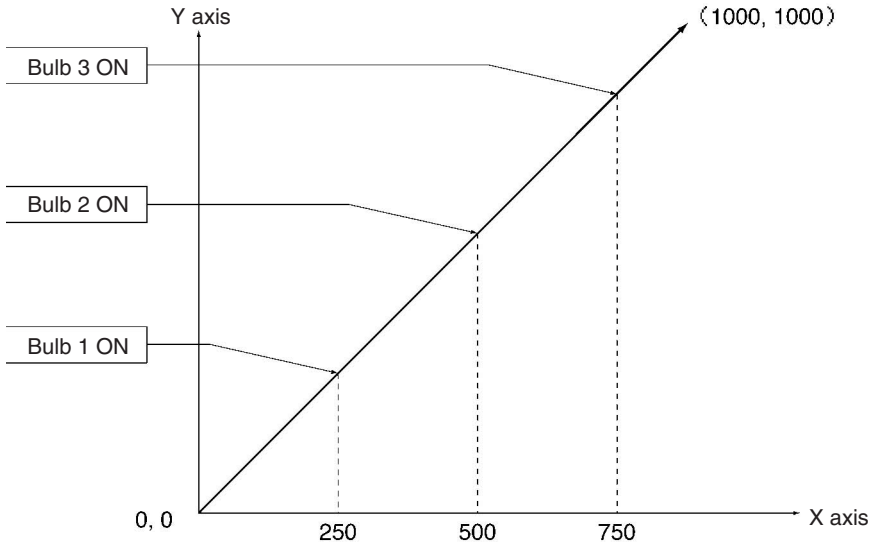

Programming Example

```
N000   P001   XY
*001   ********************************
*002   Executes interrupt notification.
*003   ********************************
N004   G01    X0     Y0     F100
N005   G75    00
N006   G70    N005
N007   G01    X250   Y250   F1000
N008   G01    X500   Y500   D100/X0
N009   G01    X750   Y750   D101/X0
N010   G01    X1000  Y1000  D102/X0
N011   G79
```

Explanation

This operation creates a ladder program for the following interrupt tasks in the CPU Unit.

Interrupt Task Number 100:

Turns ON the output on the Output Unit that controls valve 1.

Interrupt Task Number 101:

Turns ON the output on the Output Unit that controls valve 2.

Interrupt task number 102:

Turns ON the output on the Output Unit that controls valve 3.

Positioning will start when optional input zero turns ON.

N004

Moves the axis to the start position.

N005 and N006

Waits until optional input zero turns ON. When the input turns ON, unconditional jump N0006 is disabled and the next block will be executed.

N007

Moves by linear interpolation to (X, Y) = (250, 250) in Pass Mode.

N008

Moves by linear interpolation to (X, Y) = (500, 500) in Pass Mode. This specifies the point where interrupt task number 100 (D100) will start up if the travel distance is zero when the Stopover function is used. The following shows where interrupt task number 100 (D100) will start up since Pass Mode operation is being used in this case.

Present position = preceding X-axis target position (N007) + stopover travel distance
= 250 + 0
= 250

In other words, interrupt task number 100 will start up when the present position is 250 mm.

N009 and N010

Similarly, interrupt task numbers 101 and 102 will start up at present positions 500 mm and 750 mm respectively.

8-1-13 Positioning at High Speed

This program reads the present position of the workpiece with a visual sensor, calculates correction and writes the correction value to the MC Unit. After the MC Unit receives the correction, it positions the axis accordingly. The CPU Unit sends two position data items to addresses A0000 and A0001 using the IOWR instruction and the MC Unit moves the axis immediately. Data can be sent to the MC Unit and positioning commands can be executed in a single scan.

Programming Example

```
N000   P000   XY
*001   ******************************
*002   Waits for M code reset.
*003   ******************************
N004   G01    X0     Y0     M500
N005   G75    00
N006   G70    N005
N007   G01    XA0000         YA0001         F1000  M001
N008   G70    N004
N009   G79
```

Explanation

N004

Waits at the reference coordinate system origin and outputs M code 500.

N005 and N006

Waits for optional number zero to turn ON. Writes position data from the CPU Unit by IOWR instruction and turns ON optional number zero.

N007

The MC Unit positions the axis at the position specified in A0000 and A0001, outputs M code 0001, and waits for M code reset. When the reset is received from the CPU Unit, the MC Unit moves the axis to the standby position.

8-1-14 Shifting from Aligned to Rough Winding

The following example shows what happens when 10 layers are created with wire at the rate of 20 windings per layer, and then 10 windings are applied just on the 11th layer.

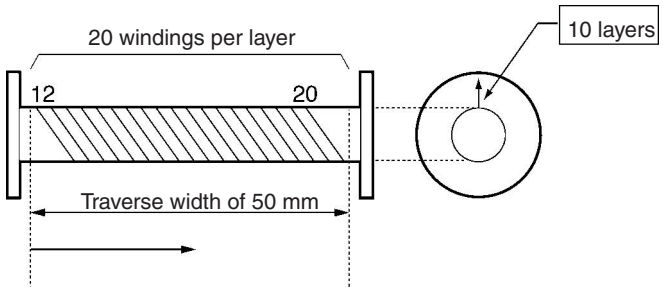

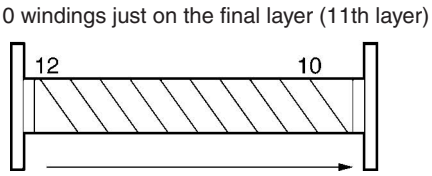

Programming Example

```
N000   P000   XY
N010   G32    X7200.0        Y50.0   F2000   L10
N020   G32    X3600.0        Y50.0   F2000   L1
N030   G79
```

Explanation

N010

Specifies 360.0° x 20 revolutions = 7200.0° on the X axis in order to get 20 windings per layer. It also specifies L10 in order to get 10 winding layers and because operation is in Pass Mode (default value for interpolated operation) it executes N020 without a break.

N020

Specifies 360.0° x 10 revolutions = 3600.0° on the X axis in order to get 10 windings per layer.

8-2 Executing MC Programs from the Ladder Program

This section describes ladder programs that will execute G-language MC programs. Use the following procedure to execute MC programs.

1,2,3...

1. Set the MC Unit to Automatic Mode. (Turn ON bit 01 of word n+3.)
2. Set the program number of the desired MC program. (Word n+2)
3. Read the program number from word n+2 to the MC Unit. (Turn ON bit 07 of word n+3.)
4. Turn ON the Cycle Start Bit to execute the MC program specified in word n+2. (Turn ON bit 02 of word n+3.)

In this example procedure, task 1 is executed. The following table shows the equivalent CIO Area control bits and CIO Area words for tasks 2 to 4.

Task	Automatic Mode Bit	Program number	Program Number Read Bit	Cycle Start Bit
2	n+5: bit 01	n+4	n+5: bit 07	n+5: bit 02
3	n+7: bit 01	n+6	n+7: bit 07	n+7: bit 02
4	n+9: bit 01	n+8	n+9: bit 07	n+9: bit 02

Ladder Programming Example

The following ladder program executes Task 1 in the MC Unit.

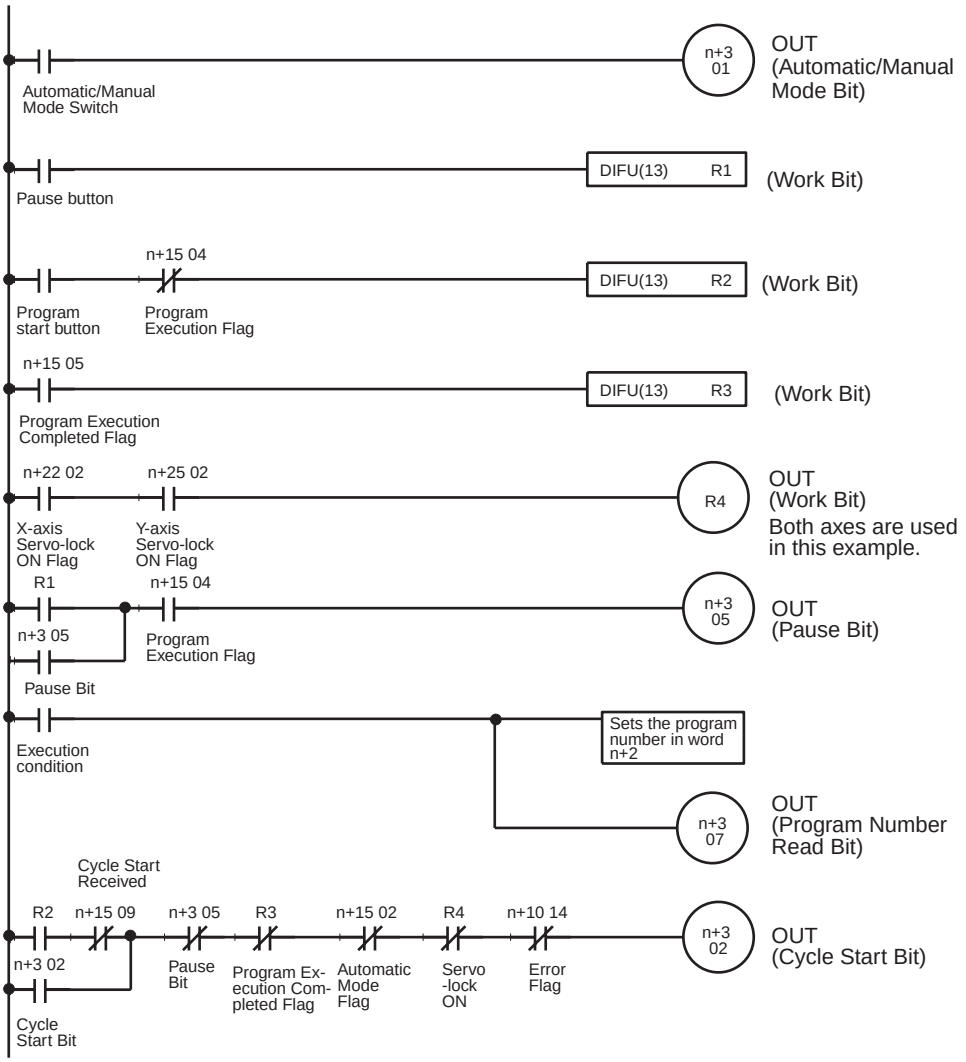

Note When executing a positioning operation in the MC program, all of the axes being used must be servo-locked (Servo-lock ON Flags must be turned ON), so be sure to add a condition like R4 in the programming example above.

Timing Chart

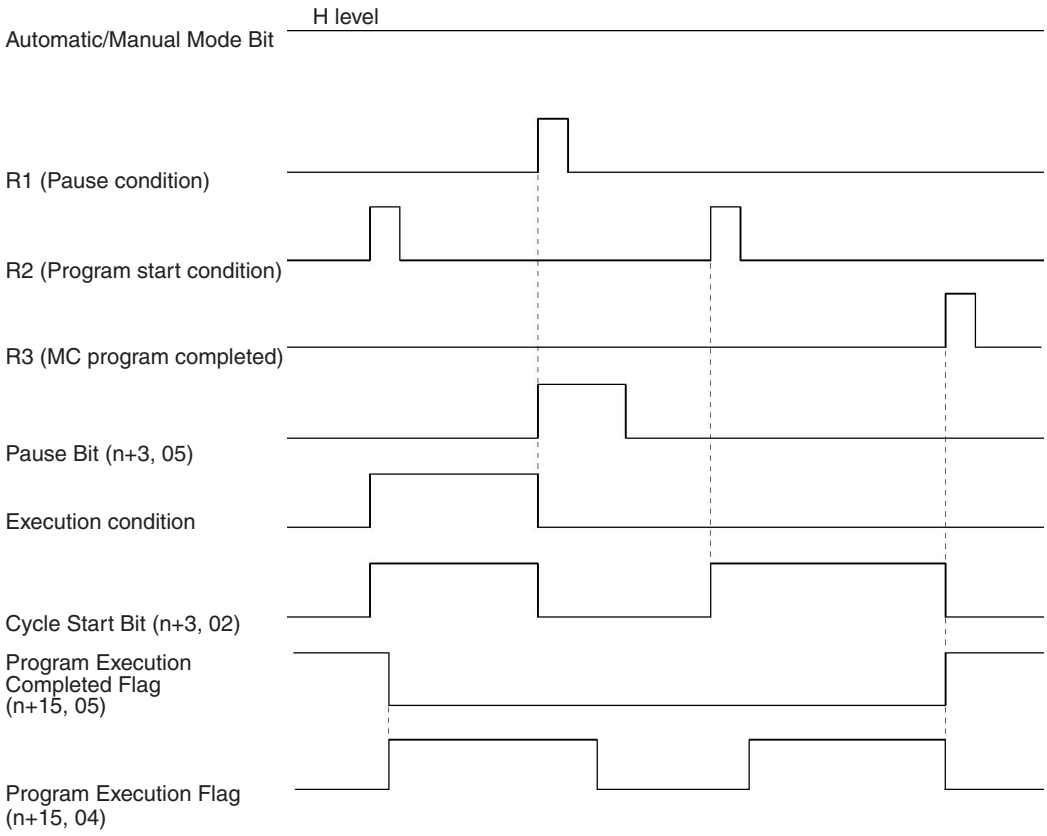

SECTION 9
Establishing the Origin

This section explains how to search for and establish the origin using either an incremental encoder or an absolute encoder, and gives a general overview of absolute encoders.

9-1 Overview 466
9-1-1 Using Incremental Encoders 466
9-1-2 Using Absolute Encoders 467
9-2 Input Signals Required for an Origin Search 468
9-3 Origin Search Methods and Parameters 468
9-3-1 Origin Search Methods 468
9-3-2 System Parameters 469
9-4 Origin Search Operations 470
9-4-1 Overview 470
9-4-2 CW/CCW Deceleration Method and the Initial Origin Search Direction 471
9-4-3 Origin Search Patterns Set by Origin Search Method 472
9-5 Absolute Encoders 479
9-6 Setting the Origin With an Absolute Encoder 480
9-6-1 Procedure 480
9-6-2 Setting Up the Absolute Encoder 480
9-6-3 Moving to the Origin 481
9-6-4 Setting the MC Unit Absolute Origin 482
9-7 Absolute Encoder Interface Specifications 483

9-1 Overview

This section describes the methods of establishing the origin for motion control systems using either incremental encoders or absolute encoders.

9-1-1 Using Incremental Encoders

In motion control systems using incremental encoders, the location of the origin must be established and the No Origin Flag must be turned OFF after the power is turned ON.

There are three ways to establish the origin in MC Units.

Operation	Description
Setting the origin using the Forced Origin Bit	The position where the motor is stopped is established as the origin.
Present position preset	The origin is established by setting the position where the motor is stopped to a preset value.
Origin search	The origin is established by moving the motor and using the limit input signal, origin proximity input signal, and encoder's phase-Z signals. If the machine parameter's origin search method is set to "Set origin at power ON," the Unit will automatically establish the position when power is turned ON as the origin, without moving the motor.

Setting the Origin Using the Forced Origin Bit

The position where the motor is stopped is established as the origin by turning ON the Forced Origin Bit in the PLC Interface Area. Refer to *5-3 PLC Interface Area* for details on the Forced Origin Bit.

Name	Model	Word				Bit	Description
		X axis	Y axis	Z axis	U axis		
Forced Origin Bit	MC421 MC221	n+11 n+7	n+13 n+9	n+15 ---	n+17 ---	05	↑: Executes forced origin set.

Present Position Preset

The present position preset operation can be performed by executing the IOWR instruction in the ladder program for the command area or by executing the G54 (CHANGE REFERENCE COORDINATE SYSTEM PV) command.

Refer to *6-17 Present Position Preset* for details on presetting the present position from the ladder program (IOWR instruction). Refer to page 419 *G54: CHANGE REFERENCE COORDINATE SYSTEM PV* for details on presetting the present position by executing G54.

Origin Search

An origin search operation can be performed by turning the Origin Search Bit ON or by executing G28 (ORIGIN SEARCH). The origin search operation can also be executed from the Teaching Box.

Name	MC Model	Word				Bit	Description
		X axis	Y axis	Z axis	U axis		
Origin Search	MC421 MC221	n+11 n+7	n+13 n+9	n+15 ---	n+17 ---	01	↑: Executes origin search.

Refer to *Sections 7-2* to *7-4* for details on performing the origin search operation using incremental encoders.

Refer to *7-3-11 G28: ORIGIN SEARCH* for details on performing the origin search operation by executing G28 (ORIGIN SEARCH) command. Refer to the *Teaching Box Operation Manual* (W320) for details on performing the origin search operation from the Teaching Box.

Origin Search in Automatic/Manual Mode

Determine the search method according to the mode of each task, as shown below.

Method		Manual Mode	Automatic Mode
Forced Origin Bit		❍	---
Present Position Preset	IOWR instruction	❍	---
	G54	---	❍
Origin Search	Origin Search Bit	❍	---
	G28	---	❍
Teaching Box		Possible in Teaching Box Enabled Mode or in Teaching Box Priority Mode regardless of whether the MC Unit is in Manual or Automatic Mode.	

9-1-2 Using Absolute Encoders

The absolute encoder retains absolute data by using the backup battery when the MC Unit or Servo Driver is turned OFF. When the MC Unit is turned ON again, if the system is set to the servo-lock state, absolute data will be read from the absolute encoder to determine the present position. No origin search is required. The absolute encoder setup procedure is briefly described below. Refer to *9-2 Input Signals Required for an Origin Search* to *9-4 Origin Search Operations* for details.

Absolute Encoder Setup

Absolute encoder data must be reset and the absolute origin must be set at the MC Unit in the following cases.

- When a Servomotor incorporating an absolute encoder is connected for the first time or replaced.
- When the battery is replaced.
- When the retained absolute data is lost because the encoder cable is removed for a long time.

Use the following procedure to set up the absolute encoder.

1,2,3...

1. Connect the motor to the machine.
2. Referring to the Servo Driver operation manual, connect a new battery.
3. Referring to the Servo Driver operation manual, set the retained absolute data to zero. At this point, the origin data of the absolute encoder is different from the origin of the machine.
4. Execute servo-lock with the MC Unit. The present value of the absolute encoder is read by the MC Unit.
5. Perform an origin search to move the Servomotor to the origin.
6. Turn the absolute encoder OFF and ON in order to save the present value as the origin. The absolute encoder value corresponding to the workpiece origin is set as absolute data.

With servo-lock in effect, the present value is automatically set to the read value less the absolute origin set value. Therefore, no origin search is required. Refer to *9-6 Setting the Origin With an Absolute Encoder*.

⚠ **Caution** When using an absolute encoder with a G-series Servo Driver, stop the axis before locking the servo. Position error will occur if the servo is locked while the axis is moving.

Name	Model	Word				Bit	Description
		X axis	Y axis	Z axis	U axis		
Absolute Origin Set	MC421 MC221	n+11 n+7	n+13 n+9	n+15 ---	n+17 ---	06	↑: Sets the absolute origin.
Origin Search	MC421 MC221	n+11 n+7	n+13 n+9	n+15 ---	n+17 ---	01	↑: Executes origin search.

Refer to *5-3 PLC Interface Area* for details on these bits. For details on setting up the absolute encoder from the Teaching Box, refer to the *Teaching Box Operation Manual* (W320).

9-2 Input Signals Required for an Origin Search

The following signal inputs and conditions are required to perform an origin search.

Signal	Description
CW and CCW limit signals	Normally closed inputs are required.
Origin proximity signal	The logic of this signal can be changed in the machine parameters, so either normally closed or normally open inputs can be used.
Encoder's phase-Z signal	The MC Unit detects the signal when it changes from Low to High.

CW and CCW Limit Signals

These signal inputs indicate that the workpiece's maximum range, for clockwise (CW) or counterclockwise (CCW) motor rotation, has been reached.

Origin Proximity Signal

This signal input indicates that the axis is near the origin.

Encoder's Phase-Z Signal

This signal is output when the encoder has made one revolution. Two phase-Z signals are output per revolution in the case of OMRON M-series Servomotors.

The first phase-Z position after the origin proximity signal input changes from ON to OFF is the actual workpiece origin.

9-3 Origin Search Methods and Parameters

9-3-1 Origin Search Methods

There are three possible settings for the origin search method.

Set Origin at Power ON Mode

The origin is automatically set to the motor's position when power is turned ON.
If origin search is performed in this mode, the Unit will search for the position of the motor at power ON.

Reverse Mode

The direction is reversed if a limit signal input is received during the origin search.

The origin will be established when the phase-Z signal goes ON after the origin proximity signal input goes from ON to OFF (normally open input).

When there is no origin proximity signal input, a limit signal input can be used instead.

One-direction Mode

The origin search is performed in just one direction. An error will occur if a limit signal input is received before the origin proximity signal input.

When there is no origin proximity signal input, a limit signal input can be used instead.

9-3-2 System Parameters

The following system parameters are required to perform the origin search operation. These system parameters are set using the CX-Motion.

Δ: Set as required ❍: Necessary ---: Disabled

Parameter	Description	Parameter setting		
		Power ON Mode	Reverse Mode	One Direction Mode
Origin search method	Specifies one of the three origin search modes (i.e., Power ON Mode, Reverse Mode, or One Direction Mode).	❍	❍	❍
Phase-Z detection direction	Specifies whether to move in the + or – direction to detect the Z phase.	---	❍	❍
Initial origin search direction	Specifies the direction to start an origin search.	---	❍	---
Origin deceleration method	Specifies whether to use origin proximity signal input or limit signal input for deceleration near the origin.	---	❍	❍
CW/CCW deceleration method	Specifies the limit signal input for deceleration.	---	❍	❍
Origin proximity input logic	Specifies whether the origin proximity input is normally open or normally closed.	---	❍	❍
High-speed origin search feed rate	Specifies high-speed feed rate for an origin search.	---	❍	❍
Low-speed origin search feed rate	Specifies low-speed feed rate for an origin search.	---	❍	❍
Reference origin offset	Sets the offset value of the workpiece origin (phase-Z detection position).	---	Δ	Δ

For further information on setting system parameters, refer to the *CX-Motion Online Help.*

9-4 Origin Search Operations

9-4-1 Overview

This section provides basic examples of origin search operations with the origin search method set to Reverse Mode.

The following origin search is performed with an origin proximity signal input, the initial origin search direction set to CW, and the origin search reverse condition the same as the origin search direction.

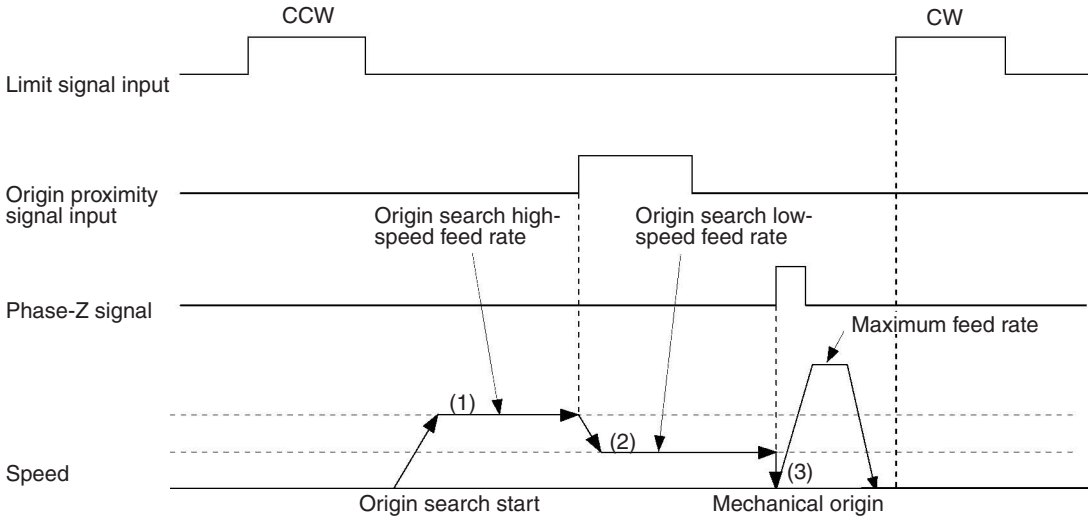

Description

There are three steps involved in this origin search.

1,2,3...

1. When the origin search is executed, the axis is moved in the specified direction at the origin search high-speed feed rate.
2. When the origin proximity input signal is received, the search speed is reduced to the origin search low-speed feed rate.
3. After the origin proximity input signal goes OFF, the workpiece origin is established at the position where the phase-Z signal goes ON. The control voltage drops to zero at this point.

   If the reference origin offset value has been preset, the axis is moved for the value preset after retrieving the overriding value with PTP control and the resulting position is established as the reference origin.

   Basic operation and the factors causing errors change according to the timing of the limit signal, the origin proximity signal and the phase-Z signal, and the initial origin search direction. For details, refer to *Appendix F Origin Search Patterns*.

Note The origin search is performed with PTP control. Refer to *6-2 PTP Control* for information on the required acceleration and deceleration times.

9-4-2 CW/CCW Deceleration Method and the Initial Origin Search Direction

Parameters are provided to specify the CW/CCW deceleration method and the initial origin search direction. This section provides information on these settings.

Setting the CW/CCW Deceleration Method

When a previous model of MC Unit receives a limit signal input during the origin search operation, reverse operation will start after the movement is stopped by a counter pulse. It does not decelerate to a stop. As shown below, with the CS1W-MC-421/221, it is possible to select whether reverse operation will start after movement is stopped by a counter pulse, or it will be decelerated to a stop.

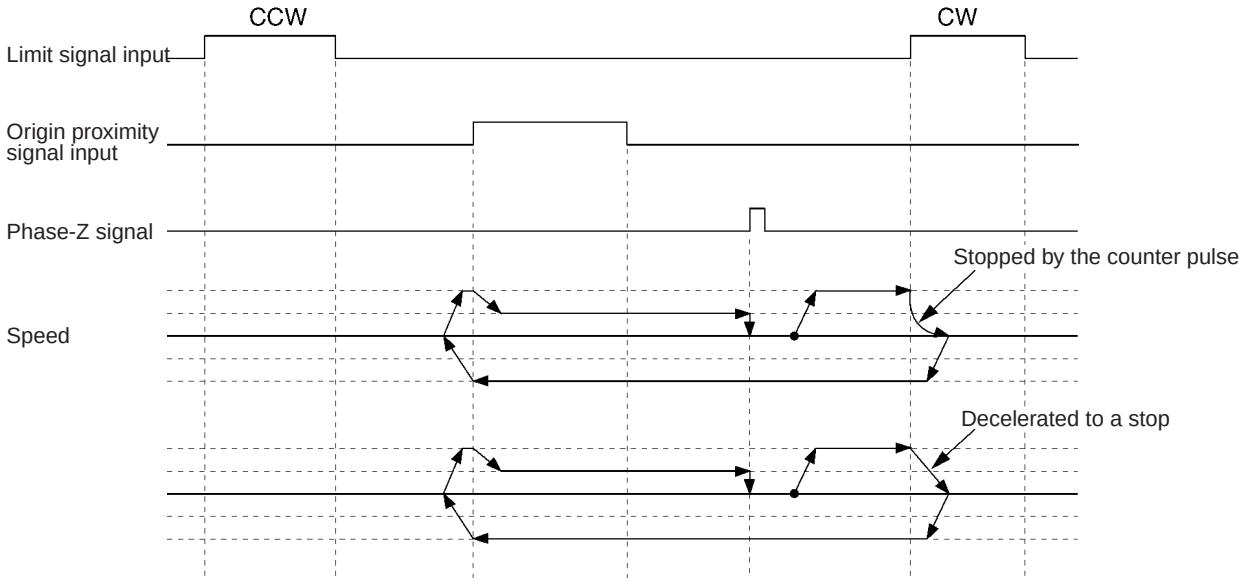

Note There is a sudden change in the speed when the MC Unit is stopped by the counter pulse as shown below.

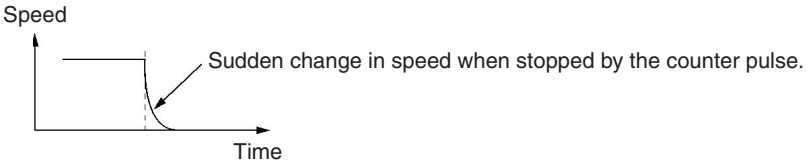

Setting the Initial Origin Search Direction

The origin search is performed by previous MC Unit models in the CW or CCW direction according to the phase-Z detection direction. With the CS1W-MC421/221, the origin search can be performed in the direction opposite to the preset phase-Z detection direction, which makes it possible to shorten the time taken to search for the origin. In the following example, the phase-Z detection direction is preset to the CW direction.

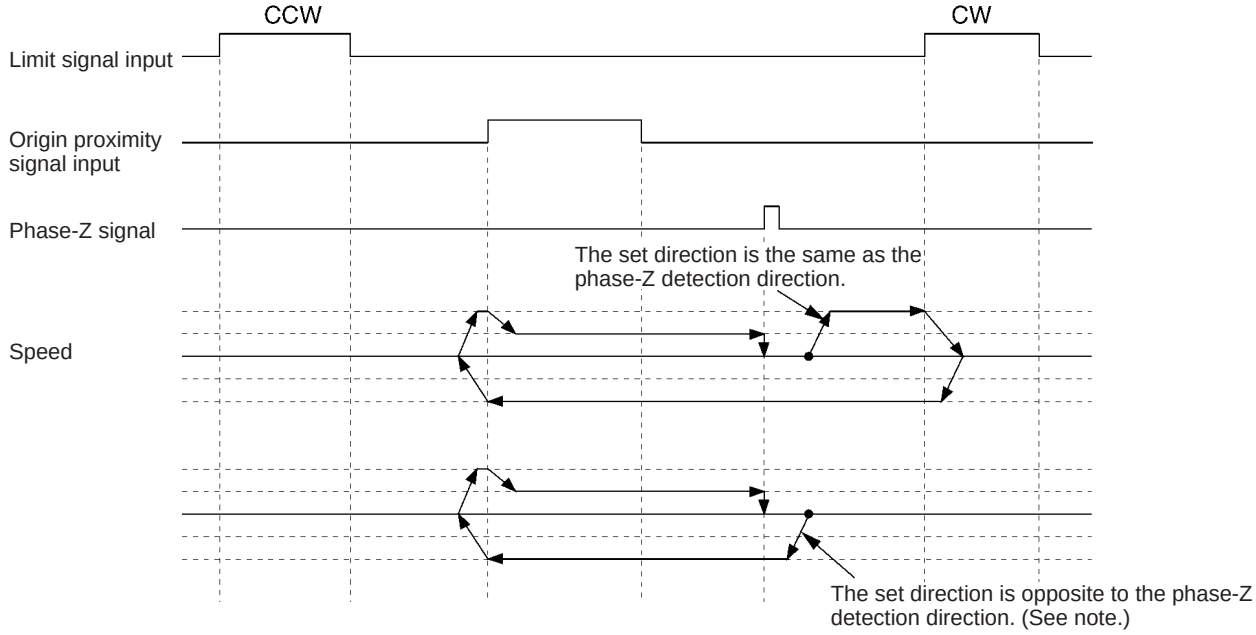

If the phase-Z detection direction is set to CW but the initial origin search direction is set to CCW, the origin search is performed in the CCW direction.

Note The origin search is performed in the direction opposite to the initial origin search direction when both the origin proximity signal input and the CW/CCW limit signal input are OFF.

9-4-3 Origin Search Patterns Set by Origin Search Method

This section provides basic examples of origin search patterns with the origin search method set to Reverse Mode or One-direction Mode. For details on other search patterns, refer to *Appendix F Origin Search Patterns*. Operation will vary depending on the position of the workpiece when the origin search is executed.

Power ON Mode

The origin is automatically set to the motor's position when power is turned ON.

Reverse Mode

Reverse-mode Origin Search 1

This origin search is performed with an origin proximity signal input, and both phase-Z detection direction and initial origin search direction set to CW.

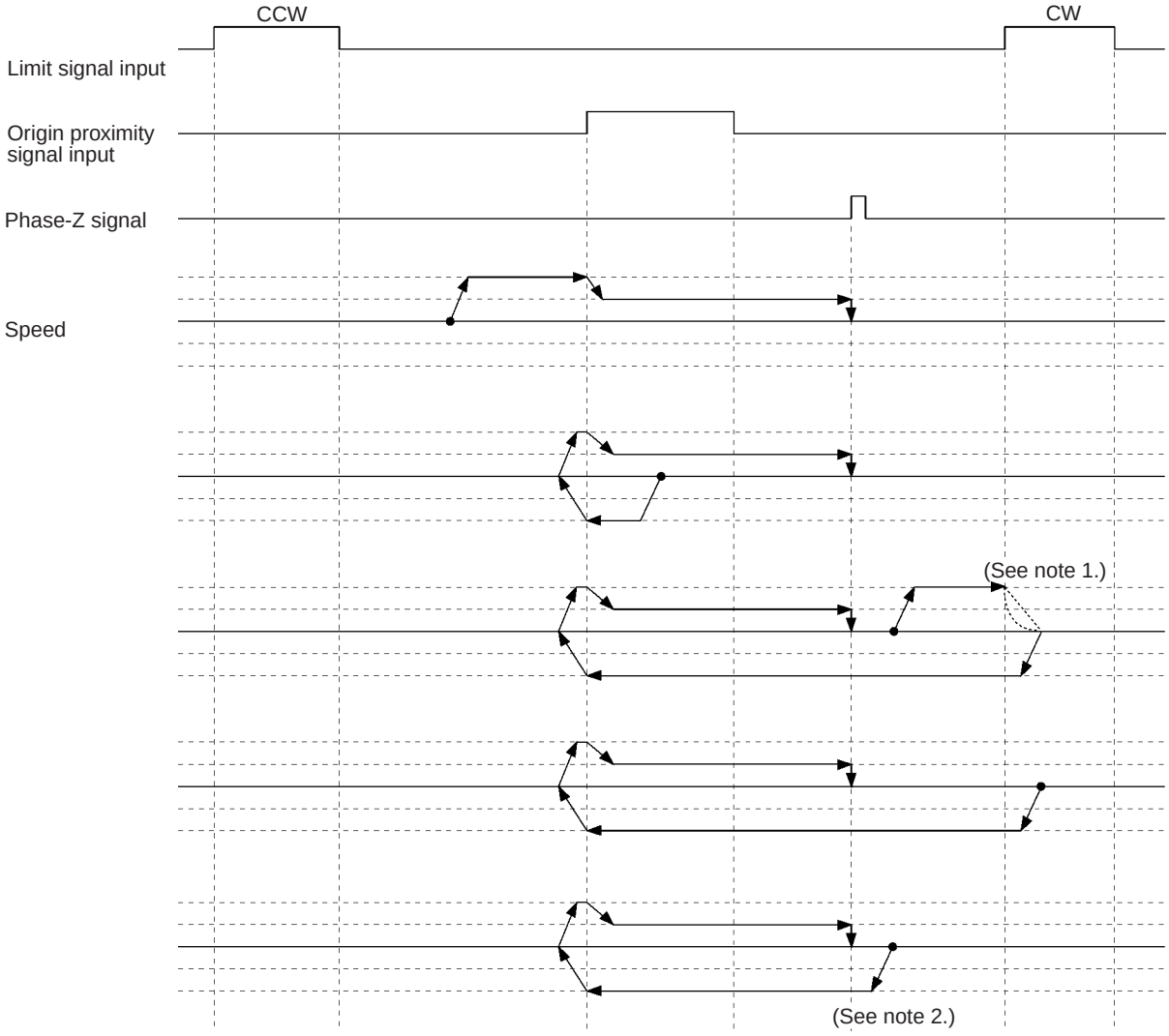

Note

1. Reverse operation will start after the movement is stopped by a counter pulse or decelerated to a stop according to the limit signal input.
2. This operation will occur when the initial origin search direction is opposite to the phase-Z detection direction.

Reverse-mode Origin Search 2

This origin search is performed with an origin proximity signal input, with both phase-Z detection direction and initial origin search direction set to CW.

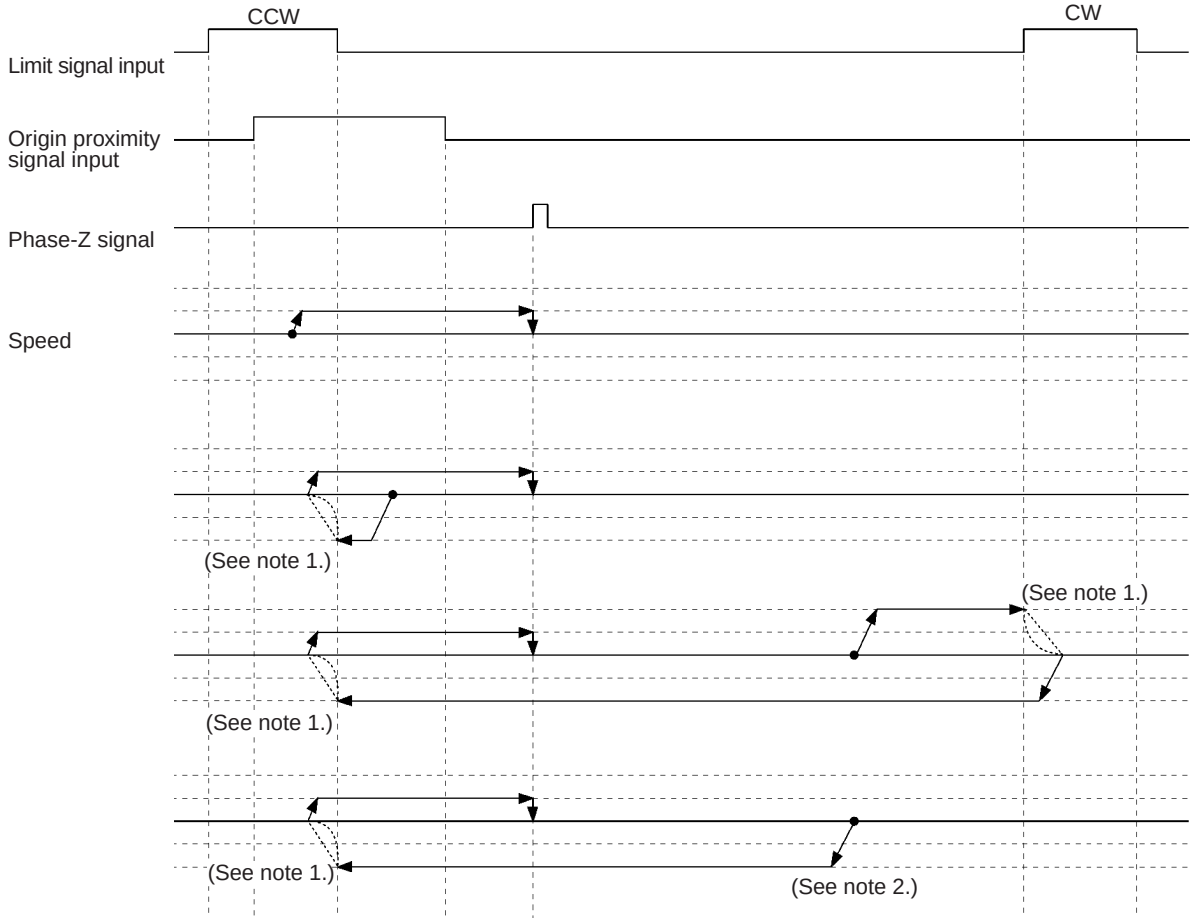

Note

1. Reverse operation will start after the movement is stopped by a counter pulse or decelerated to a stop according to the limit signal input.
2. This operation will occur when the initial origin search direction is opposite to the phase-Z detection direction.

Reverse-mode Origin Search 3

This origin search is performed with an origin proximity signal input, and the phase-Z detection direction set to CW. There is no phase-Z input, so all of these searches result in errors.

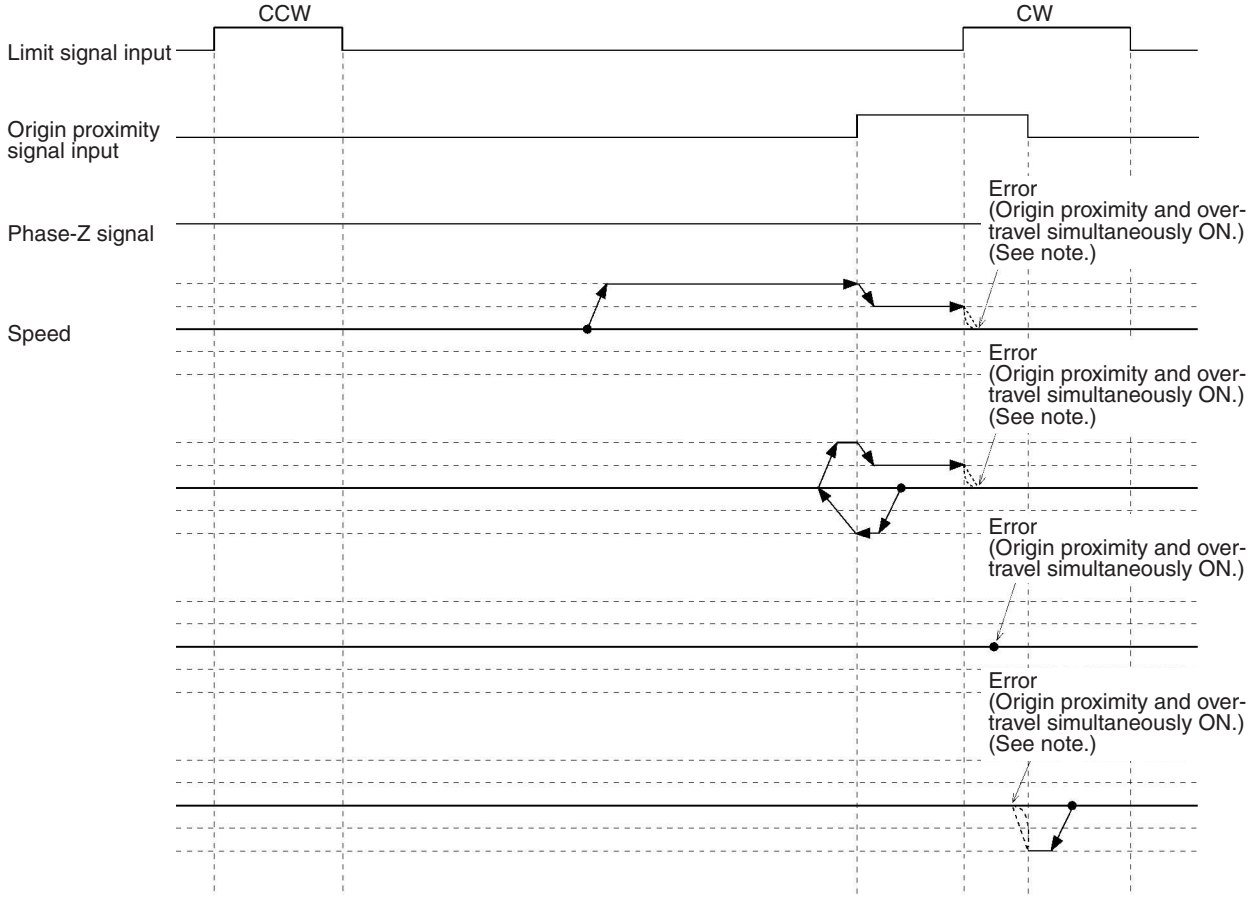

Note Reverse operation will start after the movement is stopped by a counter pulse or decelerated to a stop according to the limit signal input.

Reverse-mode Origin Search 4

This origin search is performed with both phase-Z detection direction and initial origin search direction set to CW with no origin proximity signal input.

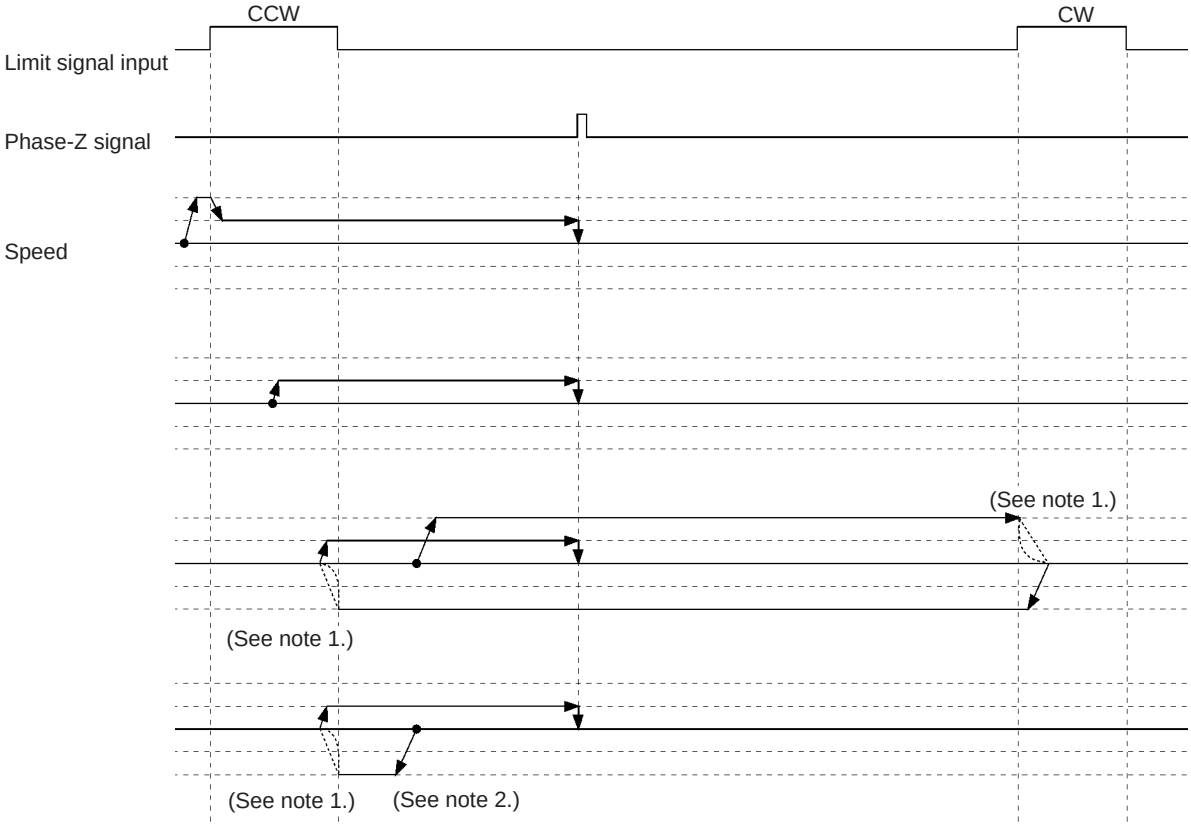

Note
1. Reverse operation will start after the movement is stopped by a counter pulse or decelerated to a stop according to the limit signal input.
2. This operation will occur when the initial origin search direction is opposite to the phase-Z detection direction.

One-direction Mode Origin Search 1

This origin search is performed with an origin proximity signal and the phase-Z detection direction set to CW.

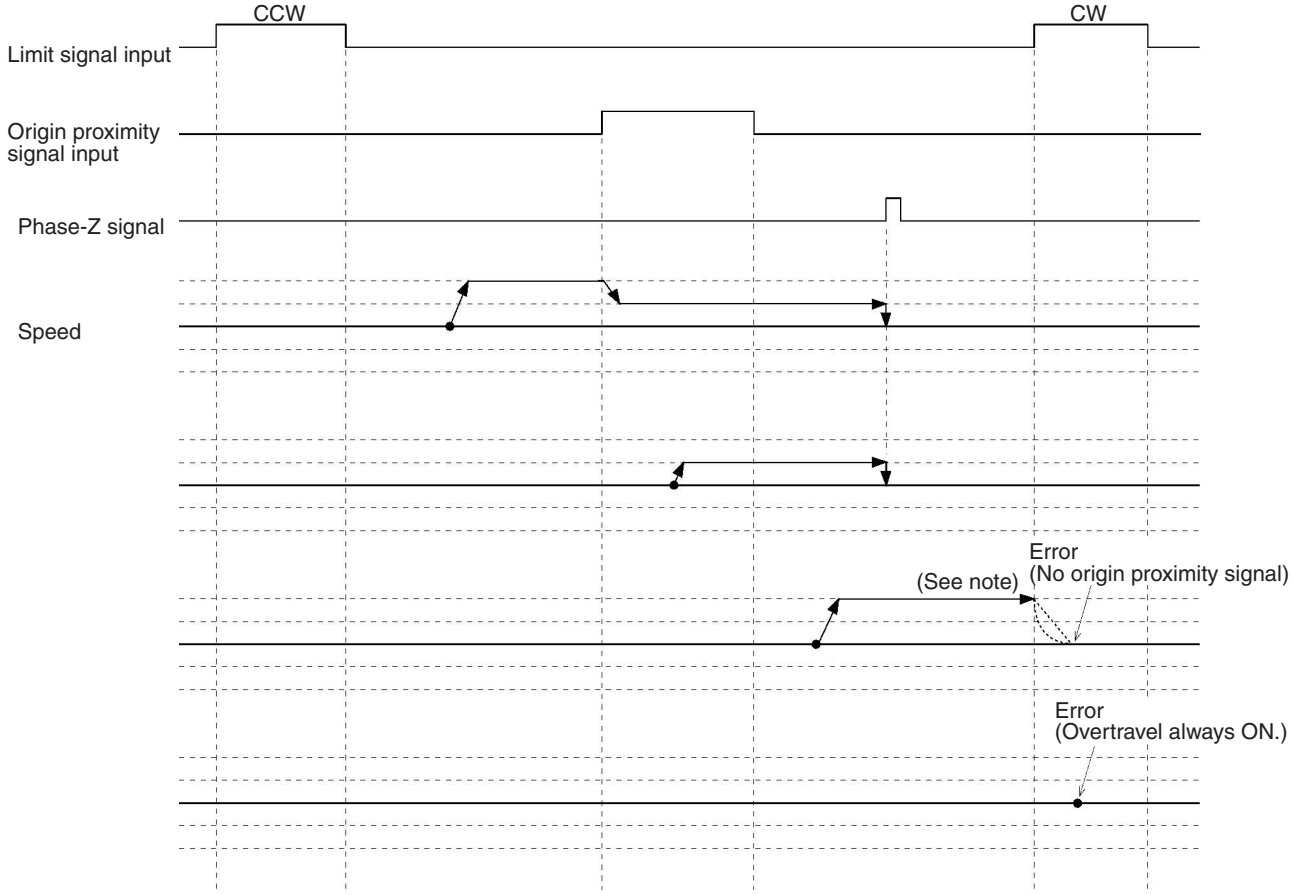

Note Reverse operation will start after the movement is stopped by a counter pulse or decelerated to a stop according to the limit signal input.

One-direction Mode Origin Search 2

This origin search is performed with an origin proximity signal input, and the phase-Z detection direction set to CW.

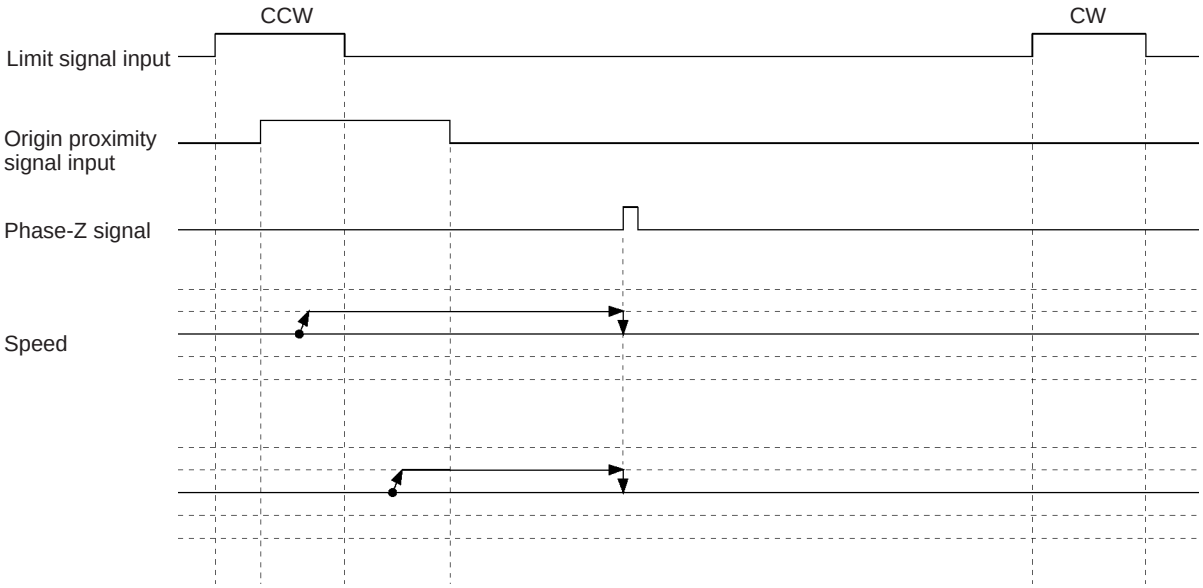

One-direction Mode Origin Search 3

This origin search is performed with no origin proximity signal input, and with the phase-Z detection direction set to CW.

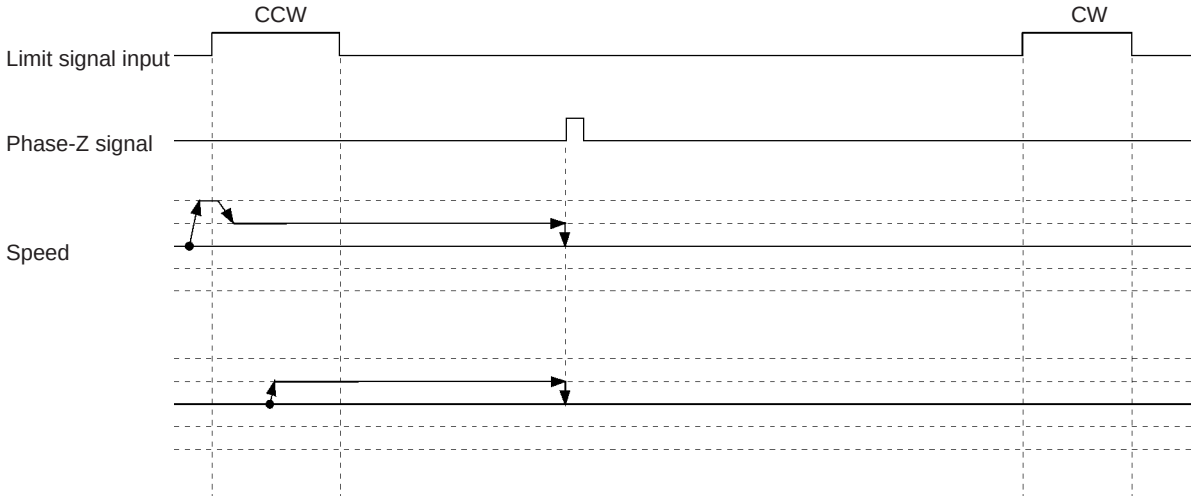

9-5 Absolute Encoders

Overview

The absolute encoder retains absolute data by using the backup battery when the MC Unit is turned OFF. When the MC Unit is turned ON again, the absolute data can be read from the absolute encoder to determine the present position. Unlike with the incremental encoder, once an origin has been set, the absolute encoder requires no origin search when turned ON.

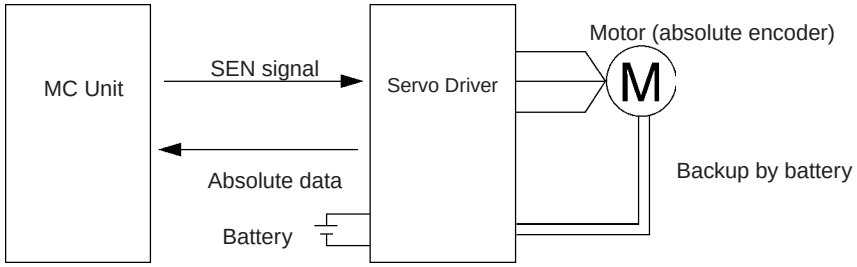

The MC Unit receives data from the absolute encoder by changing the SEN signal level from low to high.

For details on absolute encoder interfaces, refer to *9-7 Absolute Encoder Interface Specifications*.

The MC Unit receives absolute data by changing the SEN signal state from OFF to ON when the Run Command Output to the Servo Driver is changed from OFF to ON.

Applicable Absolute Encoders

The following Servomotors are provided with absolute encoders that can be connected to the MC Unit.

OMRON U Series: R88M-U□□□□□S
R88M-U□□□□□T

OMRON W Series: R88M-W□□□□□S
R88M-W□□□□□T

OMRON G Series: R88M-G□□□□□S
R88M-G□□□□□T

9-6 Setting the Origin With an Absolute Encoder

9-6-1 Procedure

Take the following steps to set up the absolute encoder.

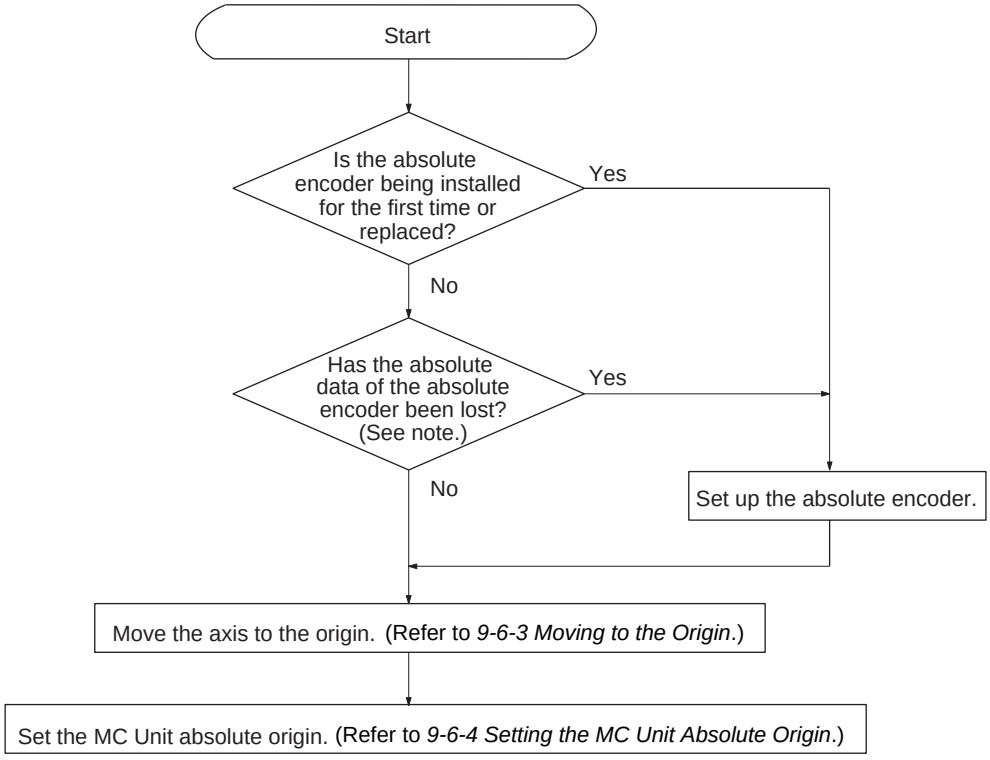

Note When the battery is replaced or the encoder cable between the Servo Driver and motor is removed for a long time, the absolute data may be lost.

9-6-2 Setting Up the Absolute Encoder

Purpose

Absolute encoder setup is necessary when clearing the revolution count data of the encoder to zero or after the encoder has been disconnected from the battery over a period of time (for two days or more for OMRON U-series Absolute Encoders, or for a few seconds for OMRON W- and G-series Absolute Encoders). At the same time, the MC Unit must be initialized. This is because the present value of the axis in the MC Unit must be set to zero when the revolution count data of the absolute encoder has been reset.

Setup Procedure

The following setup procedure is for OMRON U-series Servo Drivers.

The procedure for OMRON W-series or G-series Servo Drivers is different. Refer to the *OMNUC W Series AC Servomotors/Servo Drivers User's Manual* (Cat. No. I531) or the *OMNUC G Series AC Servomotors/Servo Drivers User's Manual* (Cat. No. I562) for details.

1,2,3...

1. Connect the battery and wire the Servo Driver, Servomotor, and Absolute Encoder.
2. Turn ON the Servo Driver, select the Absolute Encoder with bit E of Cn-C1, and set Cn-11 to the resolution of the Absolute Encoder.
3. Turn ON the Servo Driver SEN signal input.
   With the MC Unit connected to the Servo Driver, turn ON the MC Unit and the Servo Driver. The SEN signal from the MC Unit will turn ON.

The Absolute Encoder will receive a 5-V power supply. Leave the power ON for at least 3 minutes to fully charge the backup capacitor. Do not issue servo-lock commands from the MC Unit during this operation.

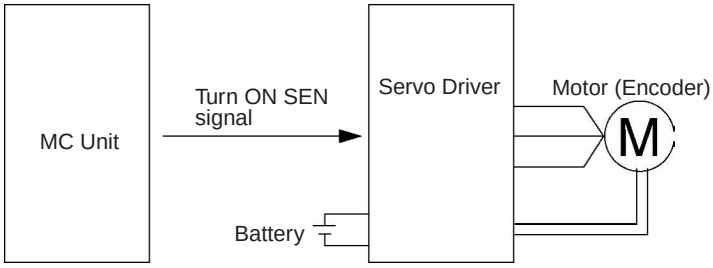

4. Turn OFF the Power of Servo Driver and MC Unit, then disconnect the encoder connector.
5. Short-circuit the encoder connector terminals 13 and 14 for one to two seconds if the Absolute Encoder is a 30- to 750-W model. Short-circuit the encoder connector terminals R and S for two minutes or more if the Absolute Encoder is a 1- to 5-kW model.

30- to 750-W model

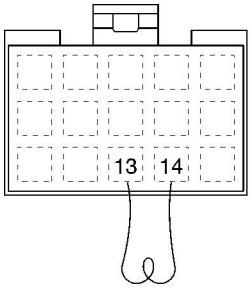

Short-circuit terminals 13 and 14 for 1 to 2 s.

1- to 5-kW model

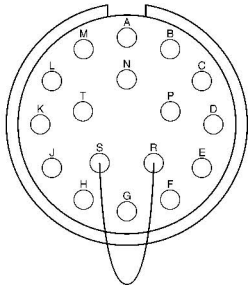

Short-circuit terminals R and S for 2 min or more.

Note If the Absolute Encoder is a 1 to 5-kW model, check the voltage between terminals R and S on the Servomotor side after the terminals have been short-circuited for two minutes or more and the short-circuiting wire has been removed. If the voltage is more than 0.4 V then, short-circuit the terminals again.

6. Reconnect the encoder connector.
7. Turn ON the Servo Driver first and then the MC Unit. Then, initialize the MC Unit.

9-6-3 Moving to the Origin

Use either of the following methods to move to the origin.

- Perform an origin search.
- Execute jogging without an origin search.

Performing an Origin Search

1,2,3...

1. Set the system to the servo-lock state.

   At this point, the MC Unit will read the absolute position from the Absolute Encoder. The absolute data read will be used to determine a tentative origin.
2. Perform an origin search.

   Refer to page 466 *Using Incremental Encoders* to perform the origin search.

If a reference origin offset value has been preset, the axis is moved for the value preset.

Note Previous MC Units can perform an origin search with an Incremental Encoder but not with an Absolute Encoder. The CS1W-MC421/221 can perform an origin search with either an Absolute Encoder or an Incremental Encoder.

Jogging Without Performing an Origin Search.

1,2,3... 1. Set the system to the servo-lock state.

At this point, the MC Unit will read the absolute position from the Absolute Encoder. The absolute data read will be used to determine a tentative origin.

2. Move the axis to the origin by jogging.

9-6-4 Setting the MC Unit Absolute Origin

By setting the absolute origin, the present position is cleared to zero and the absolute position at that time is stored as the absolute position setting (in the machine parameters). Then the present system parameters are stored in the flash memory.

1,2,3... 1. Set the absolute origin after the MC Unit is moved to the origin.

The present position is stored as the absolute origin in the MC Unit. Execute the absolute origin setting from the PLC Interface Area or the Teaching Box. Refer to page 291 *Absolute Origin Setting* for information on how to execute the absolute origin setting from the PLC Interface Area.

Name	Model	Word				Bit	Description
		X axis	Y axis	Z axis	U axis		
Absolute Origin Setting	MC421 MC221	n+11 n+7	n+13 n+9	n+15 ---	n+17 ---	06	↑: Absolute origin setting is executed.

Execute the absolute position setting from the Teaching Box by selecting “5.Absolute origin setting” from the extension mode menu. Refer to the *Teaching Box Operation Manual* (W320) for details on how to execute absolute position setting from the Teaching Box.

Note The above operation can also be executed with the system set to the servo-unlock state.

2. Back up the system parameters using CX-Motion after the absolute origin setting is completed. The set values can be rewritten by downloading the system parameters again.

The Absolute Encoder initial settings can be displayed using the IORD instruction or CX-Motion, but they cannot be changed.

⚠ **Caution** Back up the system parameters using CX-Motion after the absolute origin setting is completed.

⚠ **Caution** When editing system parameters, be sure to edit them after they have been uploaded from the MC Unit. Otherwise, the absolute data will change when it is downloaded, thus causing position errors.

⚠ **Caution** Do not execute the absolute origin setting while system parameters are being downloaded. Otherwise, the Absolute Encoder initial settings will not be stored properly.

⚠ **Caution** Do not execute the absolute origin setting for at least one second after the main power supply or control power supply to the Servo Driver is turned ON.

⚠ **Caution** If a Servo Driver error occurs when the absolute origin is being set, the absolute origin may not be set correctly. Set the absolute origin again if a Servo Driver error occurs.

9-7 Absolute Encoder Interface Specifications

This section describes the interface specifications used for OMRON U-series Servo Drivers with absolute encoder specifications.

Absolute Encoder Output Specifications

An absolute encoder outputs data from phase A, phase B, phase Z, and ABS. It has the following system configuration. With W-series models, the Absolute Encoder and Servo Driver are connected via serial communications.

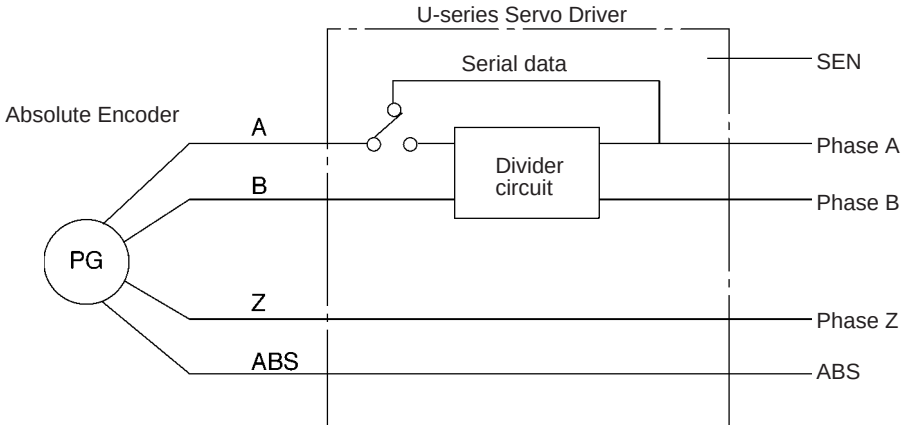

1,2,3...

1. Absolute data is output as serial data from phase A by changing the SEN signal level from low to high.
2. Initial incremental pulses are output from phase A and phase B (90° differential two-phase pulses).
3. Output operation (90° differential two-phase pulses) similar to that of ordinary incremental encoders is performed.
4. The number of revolutions is output as serial data from ABS.
   The MC Unit does not receive the ABS output.

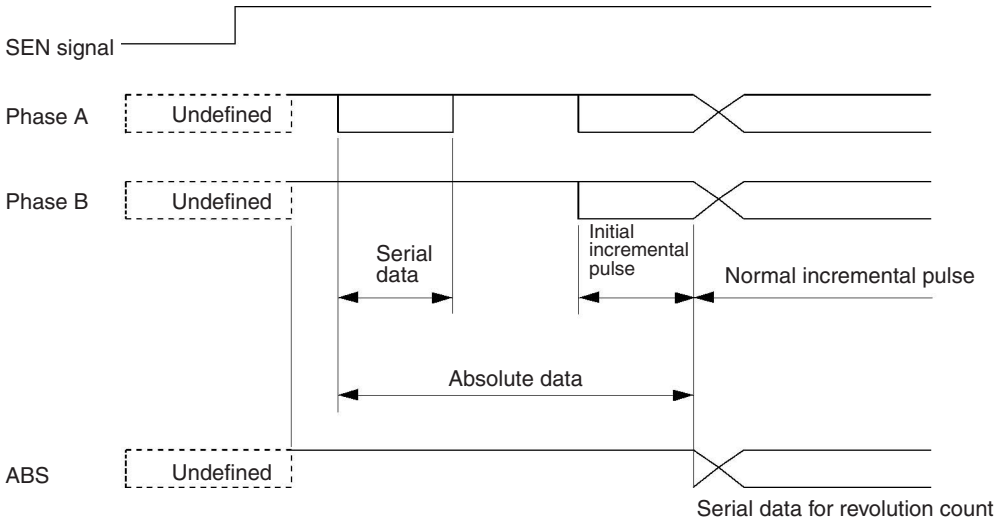

Contents of Absolute Data

- Serial Data: Indicates how many revolutions the motor shaft has rotated from the reference position (specified at setup).
- Initial Incremental Pulse Count: Indicates the number of pulses generated when the motor rotates to the present position of the motor shaft from the origin at 83 kHz if the Absolute Encoder is a 30- to 730-W model and 875 kHz if it is a 1- to 5-kW model.

The present position (P_E) can be determined using the following formula, where M is serial data (number of motor revolutions), P_O is the number of initial incremental pulses counted, and R is the number of output pulses per motor shaft revolution that is set for the divider circuit.

$$P_E = M \times R + P_O$$

Example

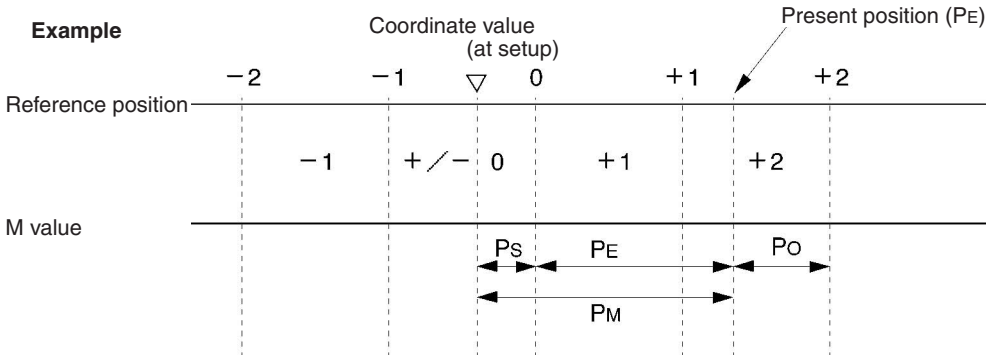

P_E: Present value (servo) read by encoder
M: Number of revolutions (servo)
R: Number of pulses per encoder revolution
P_O: Number of initial incremental pulses (servo) read by encoder (normally, negative value)
P_S: Number of initial incremental pulses read at setup (normally, a negative value, which will be then stored in the MC Unit)
P_M: Present value of the system

$$P_E = M \times R + P_O$$
$$P_M = P_E - P_S$$

Absolute Data Reception Procedure

Absolute data is processed in the following sequence.

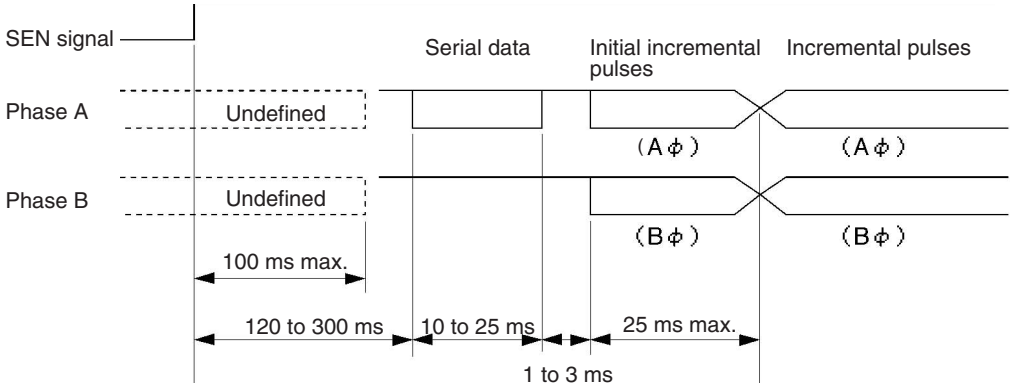

1,2,3...

1. The SEN signal level is set to high.
2. After 100 ms, the system enters serial data reception wait status.

3. The system receives 8 bytes of serial data.
4. The system enters normal incremental operation status about 50 ms after the last serial data is received.

Phase-A Serial Data Specifications for Absolute Data

The following table shows phase-A serial data specifications for absolute data.

Phase-A Serial Data Specifications

Data transmission method	Asynchronous
Baud rate	9,600 bps
Start bits	1 bit
Stop bits	1 bit
Parity	Even
Character code	ASCII 7 bits
Data format	8 characters (P or A) (+ or –) (0 to 9) x 5 digits (CR)

Serial Data

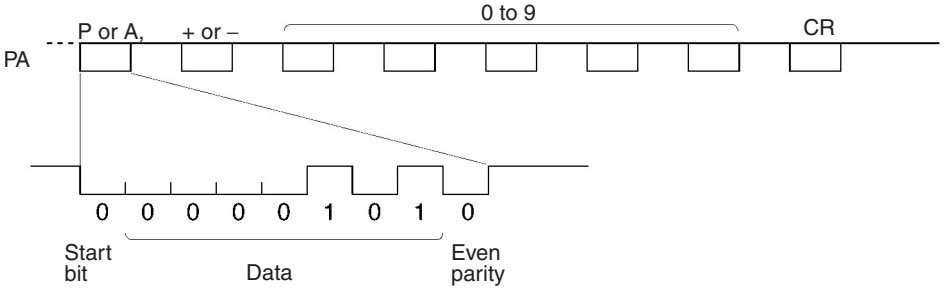

During normal operation, the number of revolutions (5 digits) from the reference position (specified at setup) is output as serial data in the above format.

Zero revolutions are output as “P+00000(CR)” or “P–00000(CR).” The number of revolutions exceeding ±99999 will not be output correctly. In other words, after exceeding ±99999, the number of revolutions will return to 00000.

SECTION 10
Teaching

This section describes the teaching function. This function can be used to teach new positions by moving to a given position and then reading the present position of each axis as position data.

10-1 Introduction 488
10-1-1 Teaching Addresses 488
10-2 Setting the Teaching Address 488
10-2-1 Setting the Teaching Address from the Ladder Program 489
10-2-2 Using the Teaching Box 490
10-3 Performing Teaching 490
10-3-1 Performing Teaching from the Ladder Program 491
10-4 Errors during Teaching 492
10-4-1 Teaching Error Flag Timing Chart 492
10-4-2 Teaching Address Over Errors 493

10-1 Introduction

After moving the axes to a desired position, that position can be read to position data addresses as position data. This process is known as teaching. The position data address is called the teaching address.

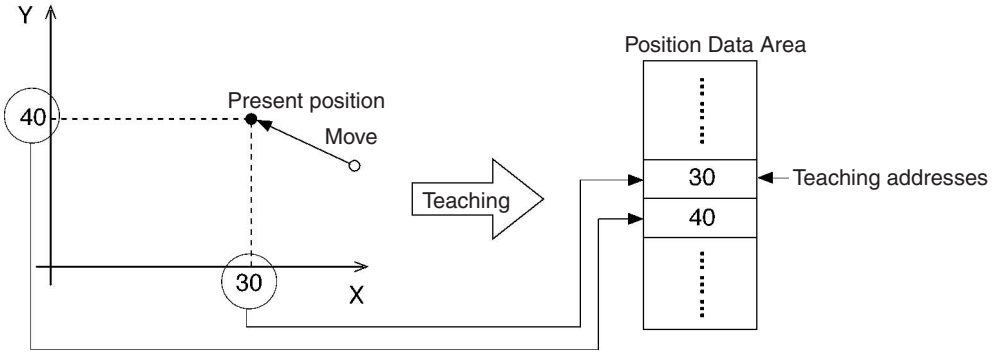

Teaching is performed separately for each task.

When the teaching command is executed, the present position data for all of the axes in the task (the axes declared in the Unit Parameter Edit menu) will be read and stored in the specified teaching addresses in order (X axis first, then Y axis).

Position Format

Teaching always reads the present position in the reference coordinate system. The present position can be read in either of two formats. Refer to page 278 *Types of Teaching* for more details on these formats.

- The target position (reference present position)
- The feedback value (actual present position calculated from the encoder)

Teaching Method

Teaching can be performed in the following two ways:

- From the PLC Interface Area using instructions in the ladder program
- From the Teaching Box

10-1-1 Teaching Addresses

When performing teaching, it is necessary to specify the position data address where the present position data will be stored. The teaching address is used to specify this position data address. Teaching addresses are initialized to zero when the power is turned ON or the MC Unit is restarted.

Set the teaching address in the command area when executing teaching from a ladder program (IOWR instruction), and in the Teaching Box when executing teaching from the Teaching Box.

10-2 Setting the Teaching Address

To perform teaching, the teaching address must be set to between A0000 and A1999. The following example shows how to set the teaching address. The teaching address is set in a memory control parameter in the system parameters.

Set the teaching address in the command area when executing teaching from the ladder program (IOWR instruction) and in the Teaching Box when executing teaching from the Teaching Box.

Refer to *3-6 Command Area* for details on the command area.

10-2-1 Setting the Teaching Address from the Ladder Program

Set the following data with the first operand of the IOWR instruction and transfer the data to the MC Unit.

Teaching Address Set Bit (Task 1): Address 17E2 hex (6114)
Teaching Address Set Bit (Task 2): Address 17E3 hex (6115)
Teaching Address Set Bit (Task 3): Address 17E4 hex (6116)
Teaching Address Set Bit (Task 4): Address 17E5 hex (6117)

Refer to *3-6 Command Area* for details regarding the command area.

Specifications

The following is a basic explanation of the IOWR instruction specifications for setting the teaching address. For a more detailed explanation, refer to *4-2 IOWR and IORD Specifications*.

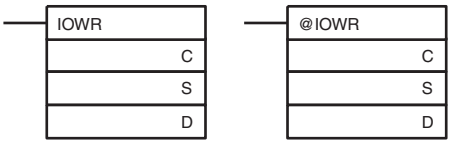

C: Control code, S: First source word, D: Destination unit number and total number of words written

Operand	Description
C	Teaching address (Hex) Teaching Address for Task 1: Address 17E2 Hex (6114) Teaching Address for Task 2: Address 17E3 Hex (6115) Teaching Address for Task 3: Address 17E4 Hex (6116) Teaching Address for Task 4: Address 17E5 Hex (6117)
S	First source word Specifies the first word in the CPU Unit from which data is to be transferred.
D	D+1 D Total number of words transferred (Hex) | Destination unit number (Hex) Specify the destination unit number to which data will be transferred and the total number of words to transfer. Number of words to transfer: Always 0002 Hex. (Refer to *Transfer Data* below.) Destination unit number: MC221: 0000 to 005D Hex (Unit numbers 0 to 93) MC421: 0000 to 005B Hex (Unit numbers 0 to 91) Example: #0002003, when two words of data are transferred to Unit #3.

Transfer Data

Set the following data starting at the first source word and execute the IOWR instruction.

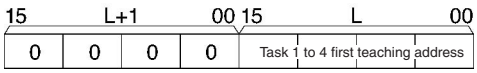

Set the task 1 to 4 teaching address (first address) to a value from 0000 to 07CF hex (0 to 1999).

Ladder Programming Example

The following example program transfers data with the MC Unit mounted to the CS and the unit number set to 0. In this example, teaching address 64 hex (100) of task 1 is set. It is assumed that both the IOWR operand and the data transferred are normal.

When debugging, check the Error Flags from the ladder program.

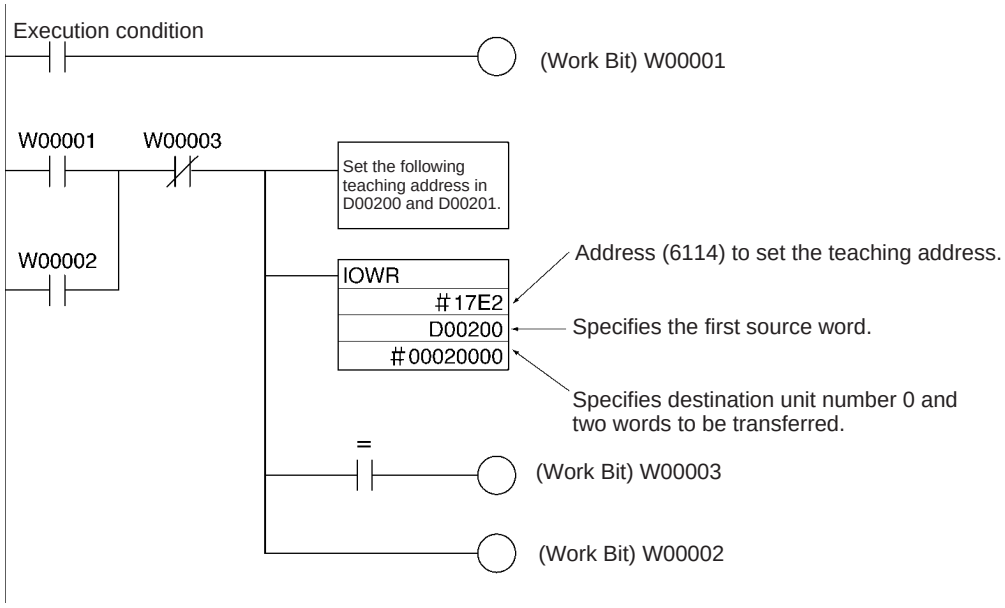

Transfer Data (DM)

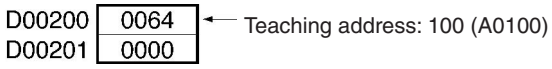

10-2-2 Using the Teaching Box

Press “TEACH” when performing teaching from the Teaching Box. The teaching address can be changed by using the Numeric Keys to change the position data address displayed in the lower-left corner of the screen. Refer to the *Teaching Box Operation Manual* (W320) for details.

10-3 Performing Teaching

Teaching can be performed once the teaching address has been set. When teaching is performed in the following example, the X-axis present position of 30 is stored in position data address A0100 and the Y-axis present position of 40 is stored in position data address A0101.

The teaching address is then automatically incremented by 2, to 102. Because the teaching address is incremented automatically, position data can be stored sequentially without resetting the teaching address.

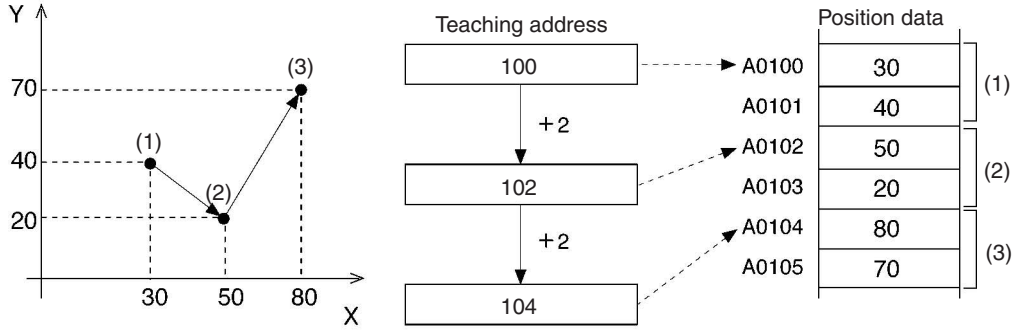

In the example, teaching is performed three times at points 1, 2, and 3. The X, Y present position data is stored and the teaching address is automatically incremented to the next open position data address.

10-3-1 Performing Teaching from the Ladder Program

In the following example, teaching is performed from the ladder program for task 1 in the CS1W-MC221. Turn ON the Teaching Bit for task 1 (n+3, bit 09) and keep this bit ON until the Teaching Completed Flag (n+15, bit 13) turns ON.

The timing chart and ladder program for this operation are shown below.

Timing Chart

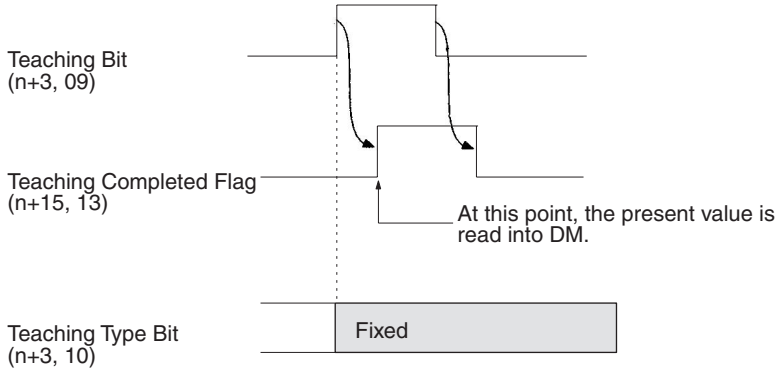

Example Program

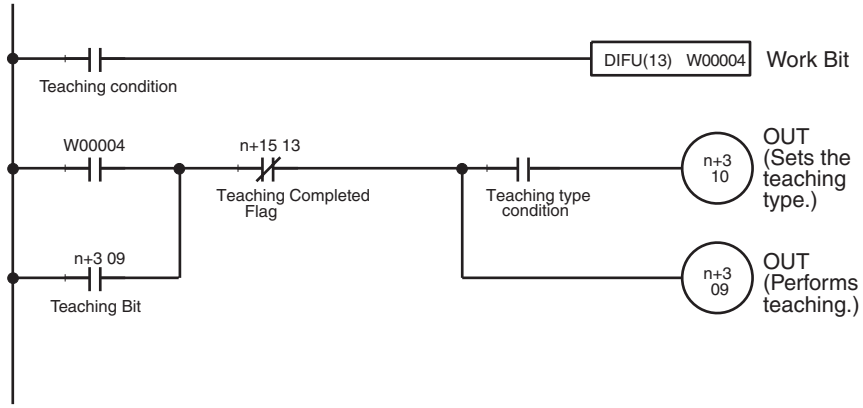

Refer to *5-4 Interface Specifics* for details.

Related Bits

The following table shows related bits in the PLC Interface Area for performing teaching.

Refer to *10-4 Errors during Teaching* for information on teaching errors and teaching address overflow errors.

Name	Model	Word				Bit	Description
		Task 1	Task 2	Task 3	Task 4		
Teaching	MC421 MC221	n+3 n+3	n+5 n+5	n+7 ---	n+9 ---	09	↑: Starts teaching.
Teaching Type	MC421 MC221	n+3 n+3	n+5 n+5	n+7 ---	n+9 ---	10	1: Present position (feedback value) 0: Target position
Teaching Completed	MC421 MC221	n+23 n+15	n+27 n+19	n+31 ---	n+35 ---	13	↑: Teaching has been completed. ↓: Teaching command is OFF.
Teaching Error	MC421 MC221	n+23 n+15	n+27 n+19	n+31 ---	n+35 ---	14	↑: A teaching error occurred. ↓: OFF when the next teaching command is completed normally or teaching address setting is completed.
Teaching Address Overflow	MC421 MC221	n+23 n+15	n+27 n+19	n+31 ---	n+35 ---	15	↑: The teaching address was too high. ↓: OFF when the next teaching command is completed normally or teaching address setting is completed.

Using the Teaching Box

After pressing “TEACH” to set the position data address, press “WRITE” and “YES.” Refer to the *Teaching Box Operation Manual* (W320) for details.

10-4 Errors during Teaching

This section provides information on examples of teaching errors, taking task 1 as an example.

10-4-1 Teaching Error Flag Timing Chart

An error will occur and the Teaching Error Flag (n+15 bit 14) will be turned ON in the following cases when performing teaching.

- Teaching is executed, but the origin has not been established. If even one of the axes in the task has not been established, the present position data for all of the axes will not be stored in the position data addresses and the teaching address will not be changed.
- The teaching address is not within the acceptable range (0 to 1999). The teaching address will not be changed if the value is incorrect.

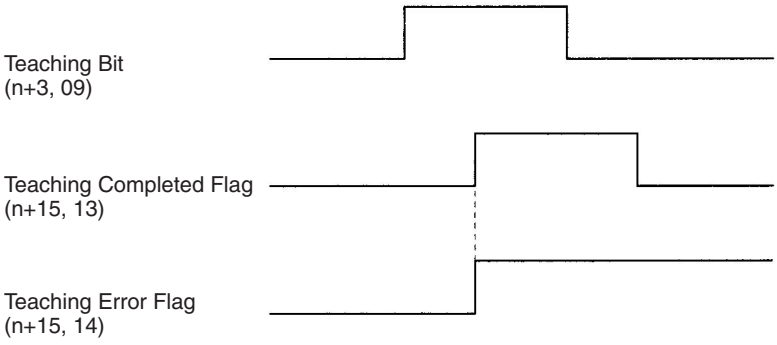

10-4-2 Teaching Address Over Errors

A “teaching address overflow” error will occur when teaching is performed with a teaching address that is not within the position data address range set in the Memory Parameter Edit menu (under the MC Parameter Edit menu). If a “teaching address overflow” error occurs, the present position will not be stored in the position data addresses and the teaching address will not be changed.

In the following examples the start address for task 1 has been set to 150 and the end address has been set to 180, so a “teaching address overflow” error will occur when teaching is performed with a teaching address less than 150 or greater than 180.

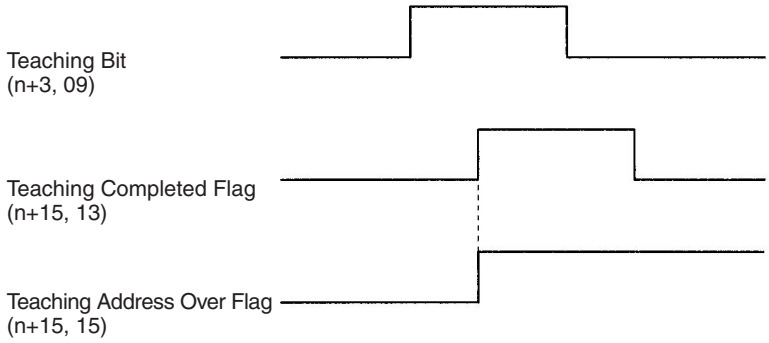

Example 1

In this example, the teaching address is less than 150 when teaching is performed.

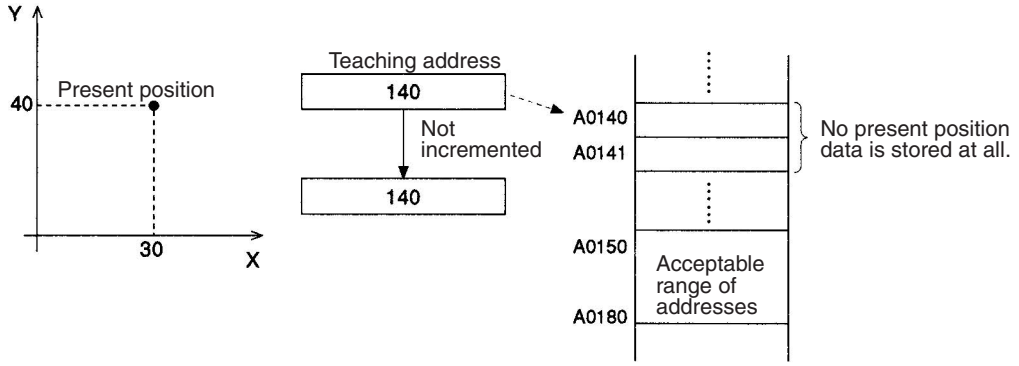

Example 2

In this example, the teaching address is just one less than the start address (150) when teaching is performed.

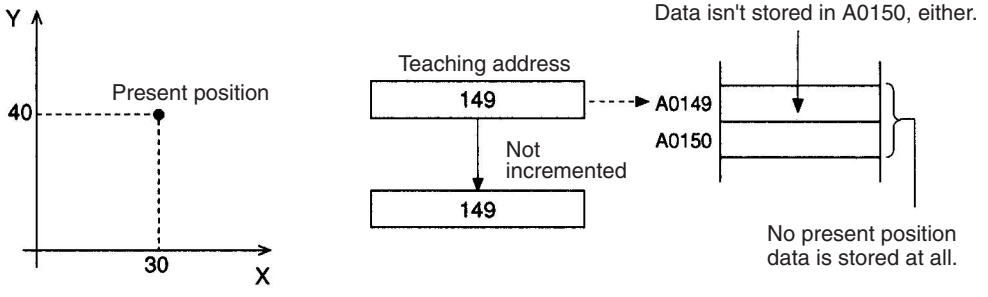

Example 3

In this example, the teaching address is not greater than 180 when teaching is performed, but it is greater than 180 when the Y axis is set to A181.

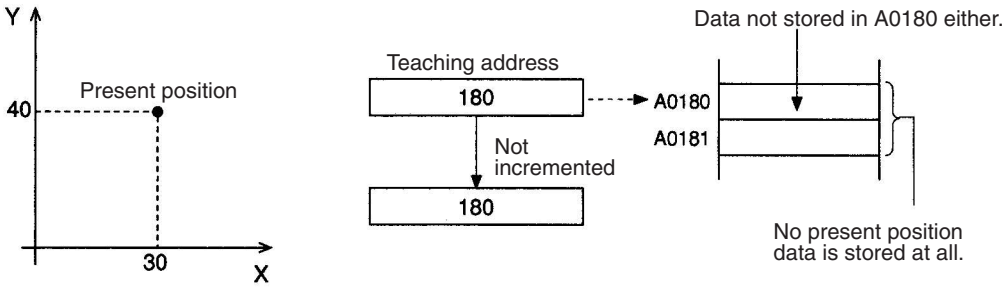

Example 4

In this example, the teaching address is already greater than 180 when teaching is performed.

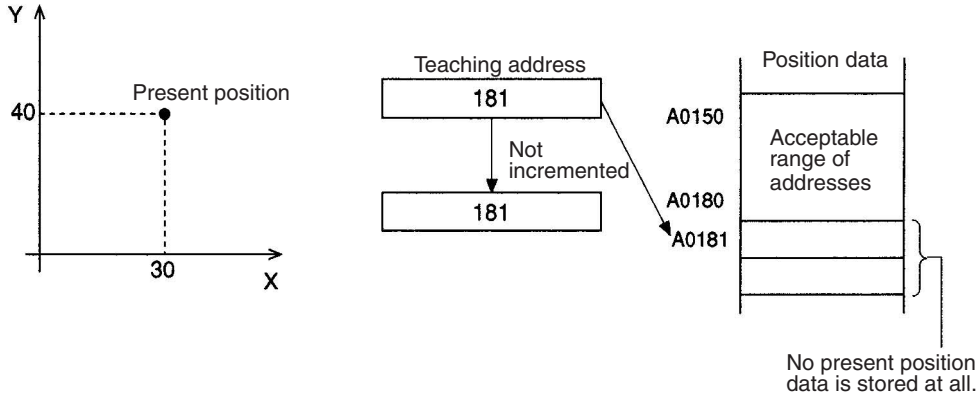

SECTION 11
Getting Started

This section explains how to get started using the MC Unit. It provides information on the MC Unit's startup procedures, system configuration, wiring, creating I/O tables, inputting MC programs, creating ladder programs, transferring data, saving data, and conducting trial operation.

11-1 Operation Details 496
11-1-1 Overview 496
11-1-2 Procedure 497
11-2 System Configuration and Wiring 498
11-2-1 System Configuration. 498
11-2-2 Checking Operation from the Teaching Box 514
11-3 Considerations When Starting Up the MC Unit. 518
11-3-1 Setting the System Parameters. 518
11-3-2 Considerations When Starting Up or Making Adjustments. 519
11-3-3 Changing the Teaching Box Mode for Trial Operation 519

11-1 Operation Details

This section explains the MC Unit startup procedures, taking the CS1W-MC221 as an example.

11-1-1 Overview

In this operation, a 2-axis mechanical system using the X and Y axes is used for positioning according to an MC program in the G-language executed in Automatic Mode, and for performing servo-lock, origin search, and jogging operations in Manual Mode.

Mechanical System

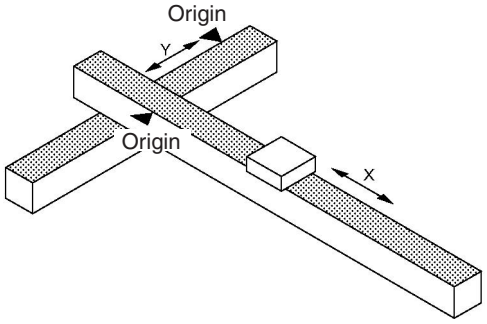

Automatic Mode Operation

The MC Unit executes the following positioning according to the MC program.

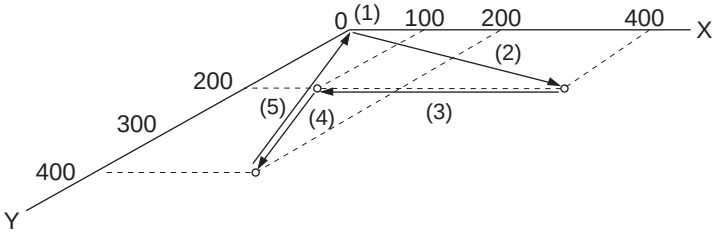

1,2,3...

1. Each axis waits at its reference origin (0, 0).
2. The X and Y axes are started to move the drill to a position where the first hole (400, 200) is to be drilled.
3. The robot moves to the next position (100, 200).
4. The robot moves to the last position (200, 400).
5. The robot returns to the reference origin (0, 0).

Manual Mode Operation

Servo-lock

If no other manual command is being executed and if the axes are not already servolocked, the X and Y axes will be servolocked.

Origin Search

If no other manual command is being executed and if the origin has not been defined yet, an origin search will be executed for the X and Y axes.

Jogging

If no other manual command is being executed and if the axes are servo-locked, jogging will be executed along the X and Y axes.

11-1-2 Procedure

The procedure for performing these operations is as follows:

1,2,3...

1. Mount the MC Unit. (Refer to *1) Mounting the MC Unit* on page 499.)
2. Set the MC Unit's unit number. (Refer to *2) Setting the Unit Number* on page 500.)
3. Connect and wire all Units and devices. (Refer to *3) Connecting and Wiring Units and Devices* on page 500.)
   Connect the Programming Devices to the CPU Unit and a personal computer with CX-Programmer and CX-Motion installed. Connect the Teaching Box. Wire the MC Unit external inputs. Wire the Input Unit (for the switch box), and wire the Servo Driver.
4. Power up the PLC and use CX-Programmer or the Programming Console to create I/O tables. (Refer to *4) Creating I/O Tables* on page 504.)
5. Create a new project and add PLC (CPU Unit) using CX-Motion. (Refer to page 505.)
6. Add MC Unit to the project and set/save the system parameters using CX-Motion. (Refer to page 506.)
7. Create, compile, and save MC programs (G language), register in the project, and save the project using CX-Motion. (Refer to page 508.)
8. Transfer the system parameters and MC programs (G language) to the MC Unit and save in the flash memory using the CX-Motion. (Refer to page 509.)
9. Create a ladder program, transfer it to the CPU Unit, and save it. (Refer to *9) Creating Ladder Programs/Transferring and Saving to the CPU Unit* on page 509.)
10. Prepare for trial operation (wiring check). (Refer to *10) Trial Operation (Operation Check)* on page 512.)
    Perform reference offset adjustment (zero balance) and gain adjustment as required.
11. Trial Operation Step 1
    Confirm correct operation of the MC program (in Automatic Mode using CX-Motion or the Teaching Box.)
12. Trial Operation Step 2
    Confirm correct operation for servolock, origin search, and jogging (in Manual Mode using CX-Motion or the Teaching Box.)
13. Confirm correct operation using the MC monitoring screen (using CX-Motion).

When setting the system parameters and conducting the trial operation, refer to *11-3 Considerations When Starting Up the MC Unit*.

11-2 System Configuration and Wiring

11-2-1 System Configuration

Perform the operations using the following system configuration. Mount the MC Unit to the CPU Backplane and set it to unit number 0.

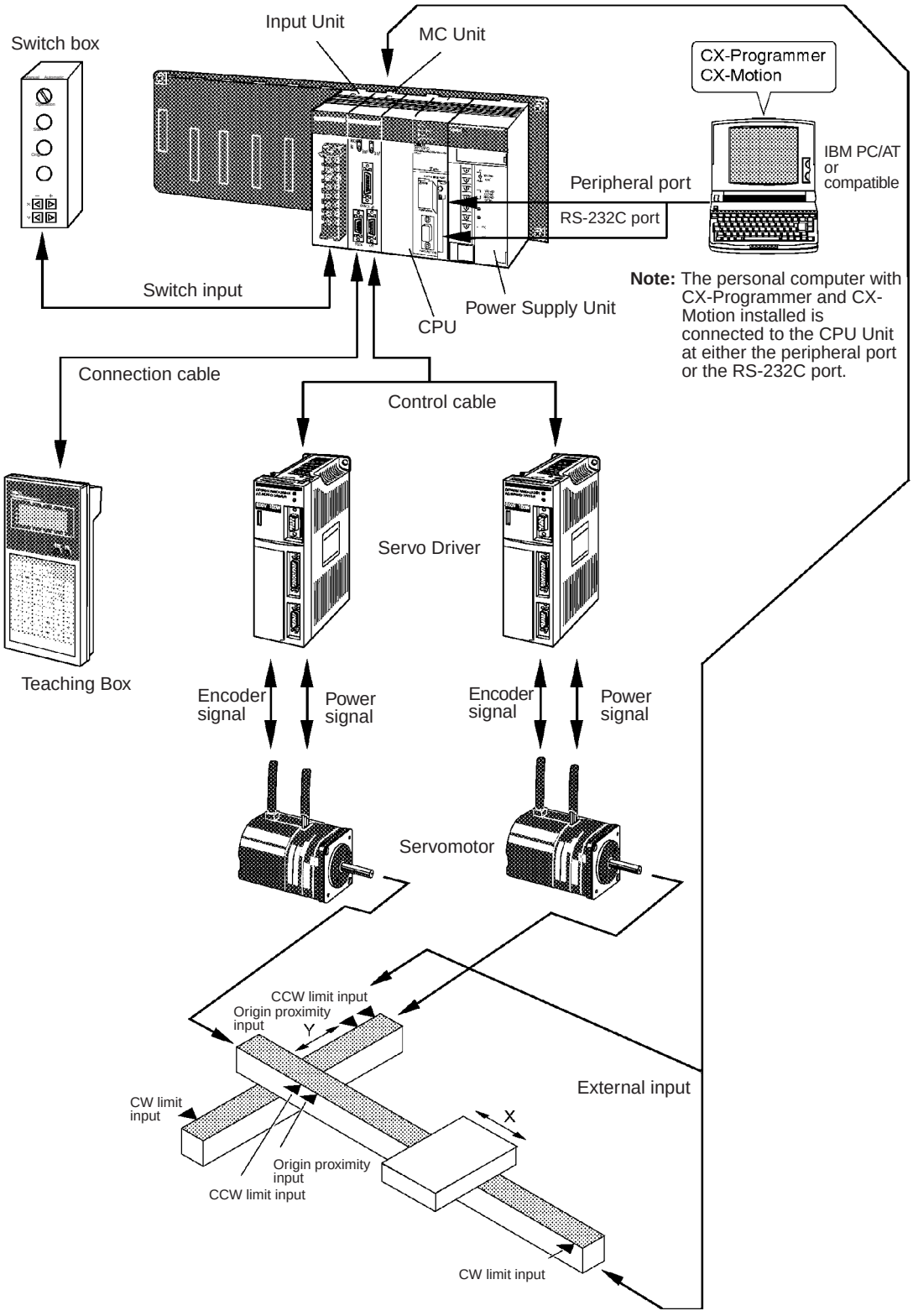

The model numbers for the Units and devices used in this configuration are provided in the following tables.

Control System

Name	Model
CPU Unit (SYSMAC CS-series)	CS1H-CPU6□-E/CS1G-CPU4□-E
MC Unit	CS1W-MC221
Input Unit	C200H-ID212
Power Supply Unit	C200HW-PA204
CPU Backplane	CS1W-BC103
Power supply for input signals	DC power supply (+24 V)
Teaching Box	CVM1-PRO01 + CVM1-MP702

Programming Devices

Name	Model
Applicable computer	IBM PC/AT or compatible
Applicable OS	Windows 98, NT V4.0, Me, 2000, or Vista
CX-Motion/CX-Programmer	CXONE-AL□□C-EV□/-AL□□D-EV□

Servo Control System

Name	Model
Servo Drivers (two)	R88D-UA03L (for 100 VAC, 30 W) × 2
Servomotors (two)	R88M-U03030L (for 100 VAC, 30 W) × 2 (See note.)
Power Cable	R88A-CAU□□□S (for U Series)
Encoder Cable	R88A-CRU□□□C (for U Series)
Control Cable	R88A-CPU00□M1 (for U Series)

Note In this example operation, U-series Servo Drivers and Servomotors are used for the X and Y axes. To use H-series, M-series, W-series, or other Servo Drivers and Servomotors, refer to the applicable manuals.

Special I/O Cable and Terminals

Name	Model
Special MC Unit Cable	XW2Z-100J-F1
Special MC Unit Terminal Block	XW2B-20J6-6

Other Items

Non-fuse breaker
Magnet relay
Noise filter (See note.)
Surge killer (See note.)
Surge absorber (See note.)
Switch box
Switch
Cables and wires

Note Refer to the operation manual for the Servo Driver to be used and prepare the required items.

1) Mounting the MC Unit

Mount the MC Unit to the CPU Backplane referring to the system configuration information above. For details, refer to *2-2 Installation*.

2) Setting the Unit Number

Set the unit number to 0 (MACHINE No.: 00) with the rotary switch on the front panel of the MC Unit.

3) Connecting and Wiring Units and Devices

Connecting Programming Devices

Connect the CPU Unit with connecting cable to a personal computer running the CX-Programmer and CX-Motion.

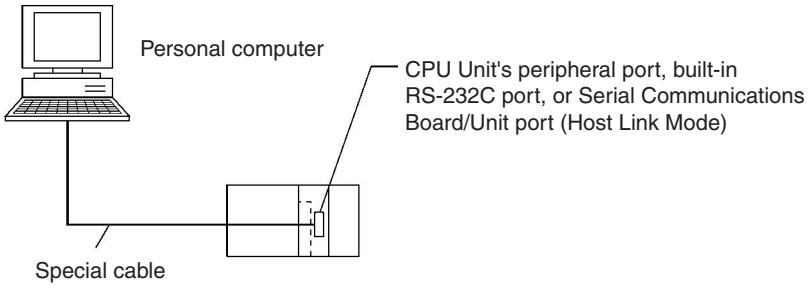

Unit	Port at CPU Unit	Personal computer	Port at personal computer	Network type (serial communications mode)	Cable model	Cable length	Remarks
CPU Unit	Internal peripheral port	IBM PC/AT or compatible	D-sub 9-pin male	Peripheral bus or Host Link (SYSMAC WAY)	CS1W-CN226	2 meters	---
					CS1W-CN626	6 meters	
	Built-in RS-232C port D-sub 9-pin female				XW2Z-200S-V	2 meters	Use a connector with protection against static electric discharge
					XW2Z-500S-V	5 meters	
Serial Communications Board/ Unit	RS-232C port D-sub 9-pin female			Host Link (SYSMAC WAY)	XW2Z-200S-CV	2 meters	
					XW2Z-500S-CV	5 meters	

Connecting the Teaching Box

Use the following connecting cable to connect the Teaching Box to the MC Unit.

Model	Cable length
CV500-CN224	2 meters
CV500-CN424	4 meters
CV500-CN624	6 meters

For details, refer to the *Teaching Box Operation Manual* (W320).

Connecting MC Unit External Inputs

The cable and terminal block shown in this example are for the CS1W-MC221.

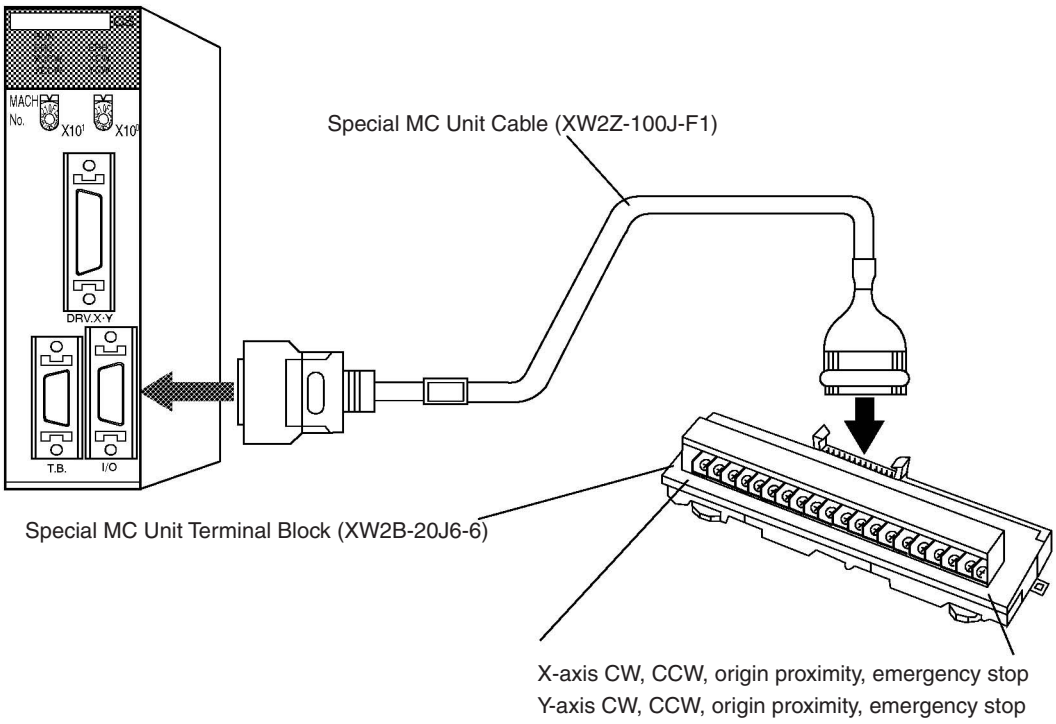

Connection Diagram

Pin No.	Label
0	0V
1	COM
2	COM
3	COM
4	IN1
5	COM
6	COM
7	COM
8	YSTOP
9	IN2
10	+24V
11	XCWL
12	XCCWL
13	XORG
14	XSTOP
15	OUT1
16	YCWL
17	YCCWL
18	YORG
19	OUT2

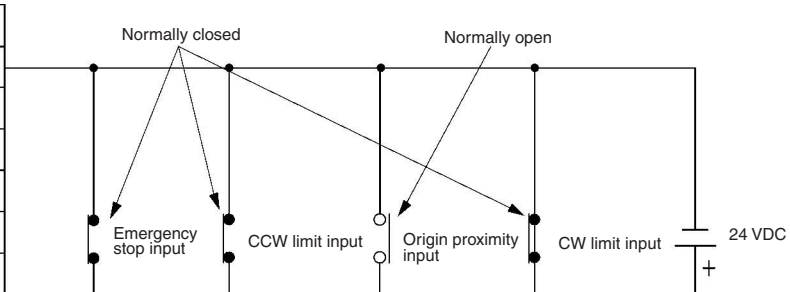

Wire the Y axis in the same way.

Wiring the Input Unit

The following illustration shows an example of the switch box used as a test device. Prepare the actual switch box and switches according to your system specifications.

Switch Box Specifications

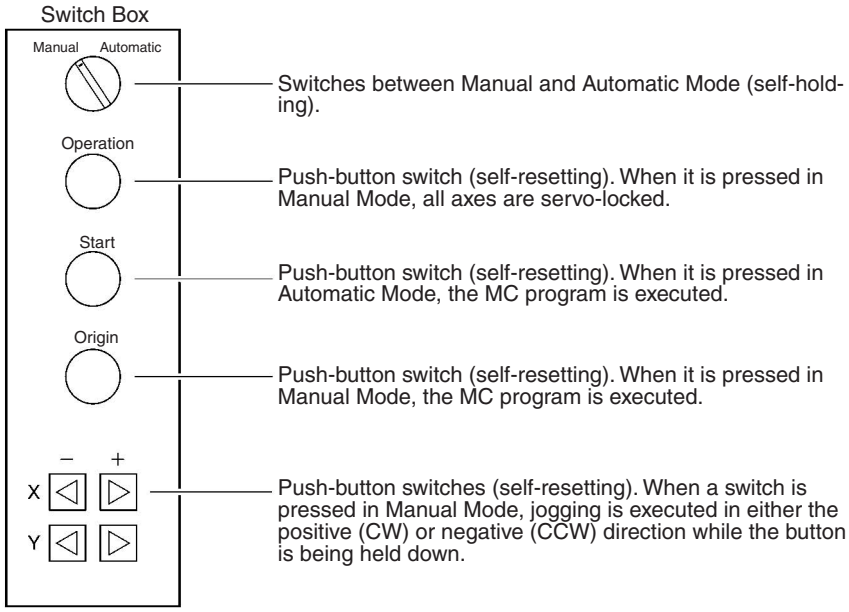

Connection Diagram

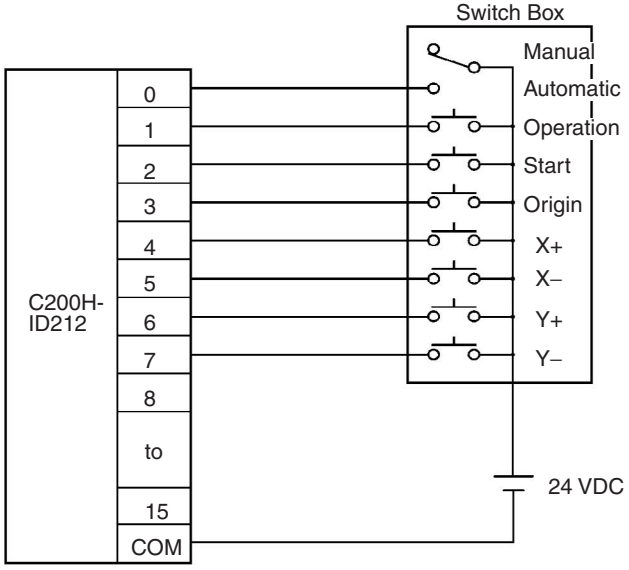

Connecting the Servo Drivers

Connect the MC Unit and Servo Drivers using special Control Cable, and connect a +24-V power supply. Then connect the Servo Drivers to the Servomotors using special Power Cable and Encoder Cable. (The Control Cable, Power Cable, and Encoder Cable are all purchased separately.)

Connecting Control Cables

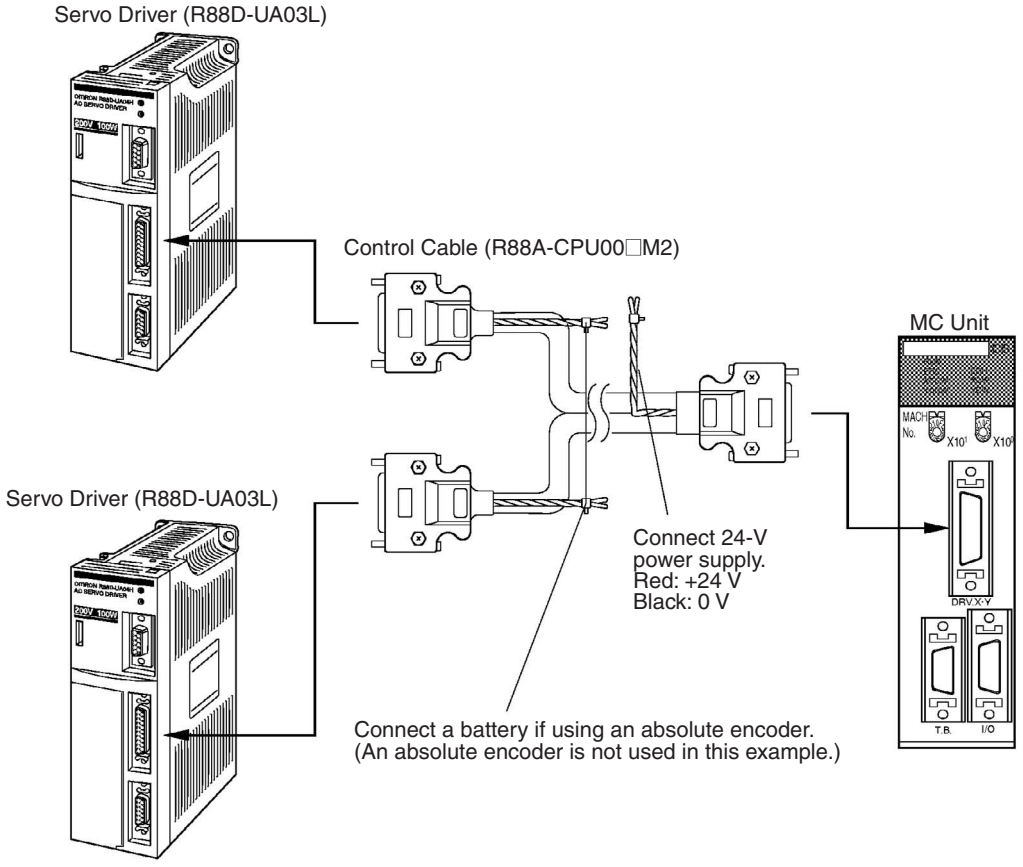

The following table shows the available Control Cables.

Series	Model number	Length
R88D-U	R88A-CPU001M1 (for two axes) R88A-CPU002M2 (for two axes)	1.0 meters 2.0 meters

Connecting Power Cables and Encoder Cables

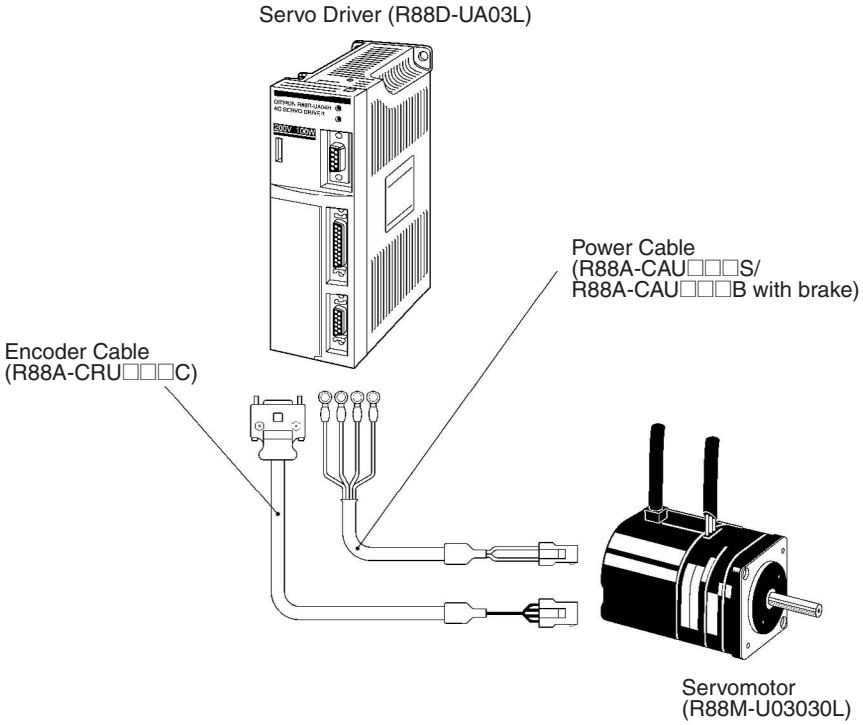

The following table shows the available Power Cables and Encoder Cables.

Power Cables

Series	Specifications	Model	Length
R88D-U	Without brake	R88A-CA003S R88A-CA005S R88A-CA010S R88A-CA015S R88A-CA020S	3 meters 5 meters 10 meters 15 meters 20 meters
	With brake	R88A-CAU003B R88A-CAU005B R88A-CAU010B R88A-CAU015B R88A-CAU020B	3 meters 5 meters 10 meters 15 meters 20 meters

Encoder Cables

Series	Model	Length
R88D-U	R88A-CRU003C R88A-CRU005C R88A-CRU010C R88A-CRU015C R88A-CRU020C	3 meters 5 meters 10 meters 15 meters 20 meters

Power Supply Wiring

Wire the power supply according to the instructions in the applicable Servo Driver manual.

4) Creating I/O Tables

Turn ON the PLC and create I/O tables according to the Units mounted to the Backplane. For details on creating I/O tables, refer to the *CX-Programmer Operation Manual* (W414 or W425).

Note It is necessary to create an I/O table after mounting the MC Unit.

5) Creating Projects/Adding PLCs (CPU Units)

Note A simple explanation of the operation procedure is given below. For details, refer to the *CX-Motion Online Help*.

1,2,3... 1. Turn ON the power supply for the personal computer, start the CX-Motion and select ***File/New/Project***.

2. The Project Properties Dialog Box will be displayed. The title can changed and explanation can be omitted.

3. Click **OK**. The Add PLC Dialog Box will be displayed.

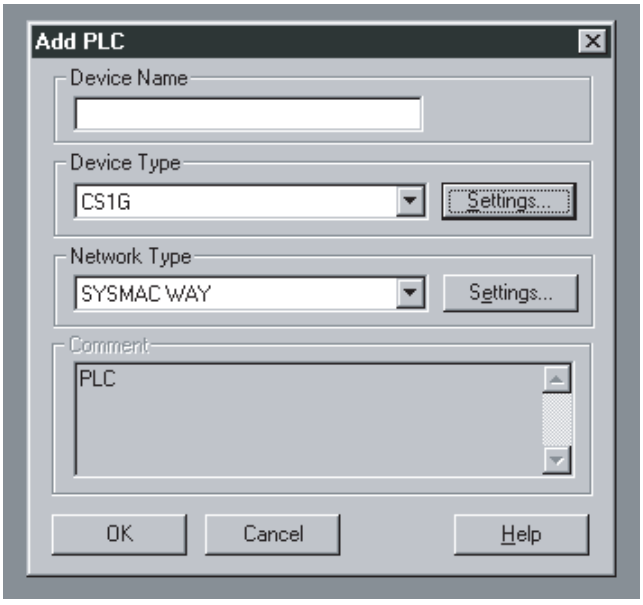

4. Input the desired PLC name.

5. Click the Down Arrow at the right of the Device Type Field, and select the PLC model from the menu. For example, if the CPU Unit is the CS1G-CPU45, select ***CS1G***.

6. Click the **Settings** button on the right of the Device Type Field. Click the Down Arrow at the right of the CPU type field, and select the type of CPU Unit from the menu. In this example, CPU45 is selected.

7. Click the **OK** button. The Add PLC Dialog Box will return.

8. Set the Network type. In this example. SYSMAC WAY is selected.

9. Click the **Set** button on the right of the Network Type Field, and click the Driver Tab.

10. In Port Name under Connections, select the port of the personal computer to which the cable is connected (COM1/COM2).

11. Click **OK**. The Add PLC Dialog Box will return.

12. Click **OK**. The PLC will be added to the project.

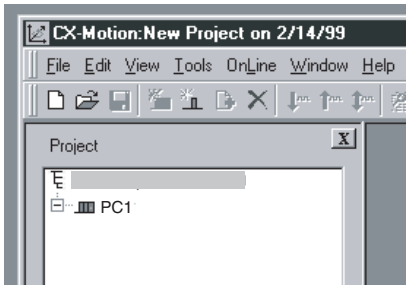

6) Adding MC Units/Setting and Saving System Parameters

Note A simple explanation of the operation procedure is given below. For details, refer to the *CX-Motion Online Help*.

Adding an MC Unit and Saving System Parameters

1,2,3... 1. In the project workspace, click the icon of the PLC that was added in *5) Creating Projects/Adding PLCs (CPU Units)*, and then select ***Edit/Add MC***. The MC Unit Dialog Box will be displayed.

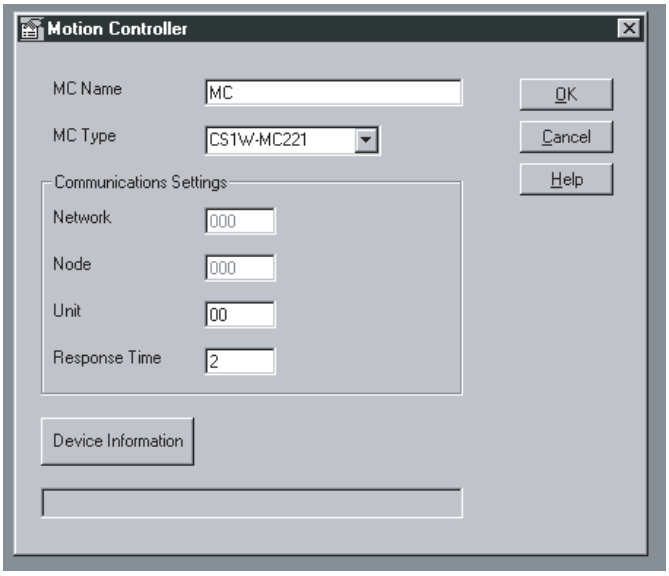

2. Input the desired MC Unit name.
3. Click the Down Arrow at the right of the MC Type Field and select ***CS1W-MC221*** from the menu.
4. Set the unit number under Communications Environment Settings to 0 (unit number 0).
5. Click **OK**.

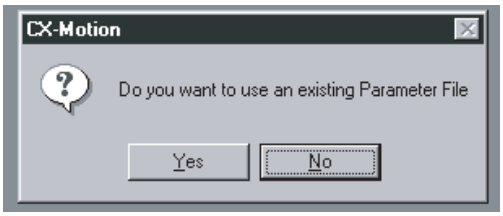

6. In this operation, new parameters are to be created, so click **No**. The Parameter File Save Type Dialog Box will be displayed.
7. Input the file name and click **Save**. The system parameters will be saved, and registered in the project.

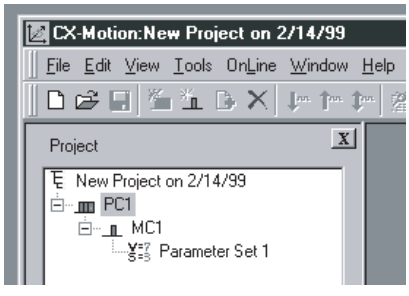

System Parameter Settings

1,2,3... 1. Double-click the system parameters in the project workspace. The Unit and memory parameters will be displayed.

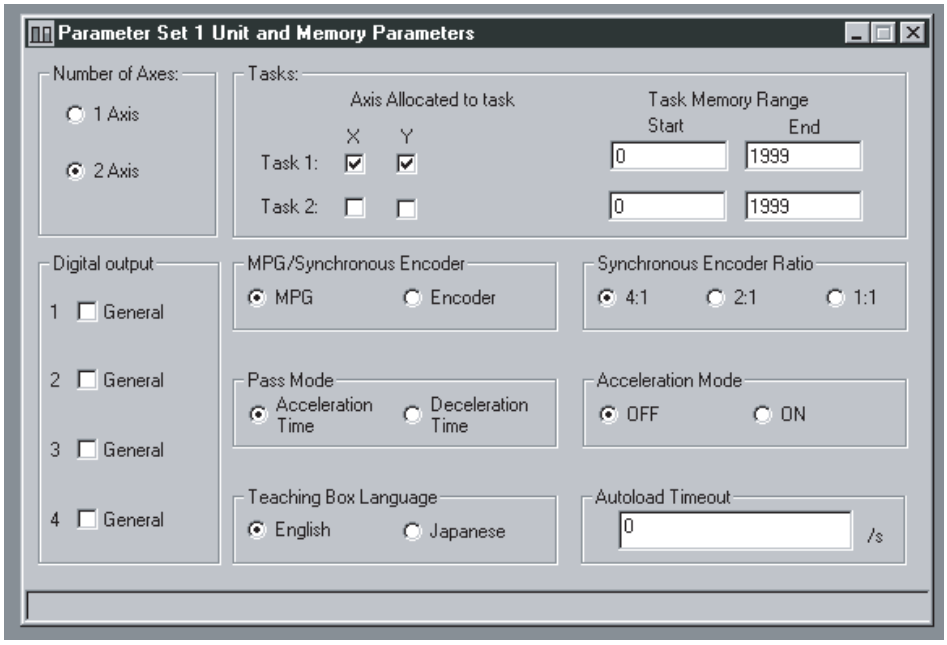

Set the system parameters that are required for controlling the MC Unit. Some of the defaults set by CX-Motion will be changed. Once the system parameters have been set, transfer them to the MC Unit and save them in the flash memory. For the task axis declaration, use the X and Y axes for task 1.

The following parameters require setting. Use default settings for other parameters.

Type of parameters	Name	Set value
Machine parameters	Minimum unit	0.01
	Display unit	mm
	Pulse rate	1/100
	Positive/negative software limit	X-axis – direction: –50.00
		X-axis + direction: 600.00
		Y-axis – direction: –50.00
		Y-axis + direction: 600.00
Feed rate parameters	Maximum feed rate	4000.00
	Maximum interpolation feed rate	4000.00
	High-speed origin search feed rate	400.00
	Low-speed origin search feed rate	40.00
	Maximum jog feed rate	400.00

When no axes are specified, set the same values for the X and Y axes.

7) Creating/Compiling/Saving MC Programs, Registering in Projects, and Saving Projects

Creating the Program

Using CX-Motion, create the following MC program. For details on creating programs, refer to the *CX-Motion Online Help*.

MC Program

```
N000  P001 XY
*001  SAMPLE PROGRAM
N002  G04 5
N003  G26 XY
N004  G11
N005  G01 X400 Y300 F30
N006  G01 X100 Y200 F10
N007  G01 X200 Y400 F30
N008  G026 XY
N009  G79
```

Program Contents

N000 Declares program number P001 and use of the X and Y axes.
*001 This is a comment.
N002 Waits five seconds.
N003 Returns the X and Y axes to their reference origins.
N004 Selects the stop mode for positioning.
N005 Moves to X400 Y300 at speed 30.
N006 Moves to X100 Y200 at speed 10.
N007 Moves to X200 Y400 at speed 30.
N008 Returns the X and Y axes to their reference origins.
N009 Ends the program.

Saving and Compiling the MC Program

Compiling

After creating the program and before transferring it to the MC Unit, compile it and check that no errors are generated.

1,2,3...

1. Select ***File/Properties***.
2. Select ***CS1W-MC221*** for the MC type, and click **OK**.
3. Select ***Tool/Compile***.

Saving

1,2,3...

1. Select ***File/Save as....***
2. After inputting a file name, click **Save**.

Registering in the Project

1,2,3...

1. Click on the MC Unit that was added in *5) Creating Projects/Adding PLCs (CPU Units*, and select ***Edit/Add File***.
2. Click on ***Program***, and click on the file that was saved in *Saving* above. The MC program will be registered in the project.

Saving the Project

Save the project before transferring system parameters and the MC program to the MC Unit.

1,2,3...

1. Click on the project in the project workspace, and then select ***File/Save project as....***
2. Input a file name, and then select ***Save***.

8) Transferring System Parameters and MC Programs to the MC Unit and Saving to Flash Memory

Note A simple explanation of the operation procedure is given below. For details, refer to the *CX-Motion Online Help*.

1,2,3... 1. Click on the MC Unit in the project workspace, select ***Online/Transfer to MC***. The Download Dialog Box will be displayed.

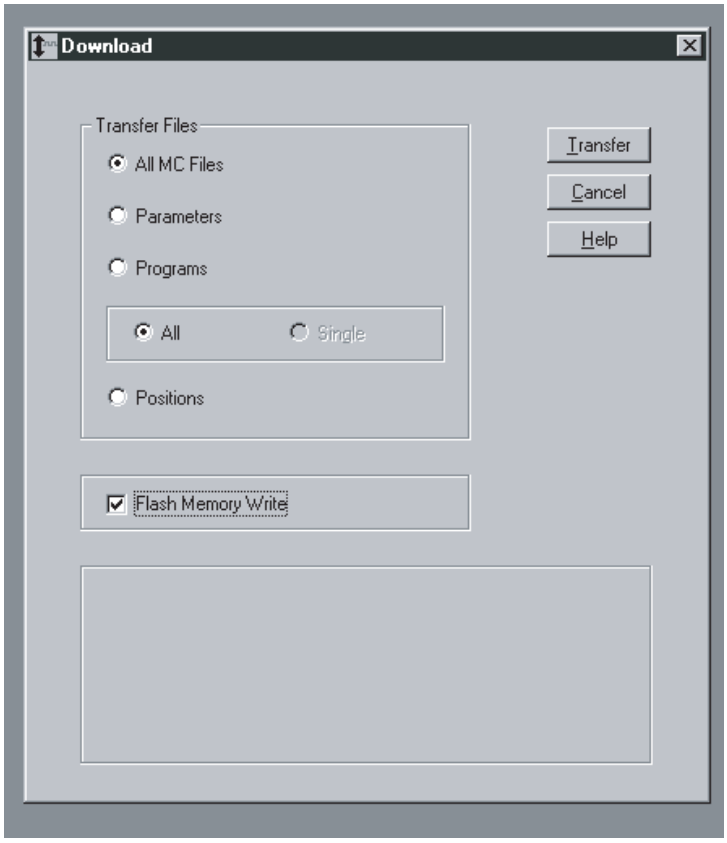

2. Turn ON the ***All MC files*** and ***Write to flash memory*** settings and click **Transfer**.

9) Creating Ladder Programs/Transferring and Saving to the CPU Unit

Creating Ladder Programs

Create ladder programs using CX-Programmer. The programs required to execute servo-lock, origin search and jogging in Manual Mode and to execute the MC program in Automatic Mode are given below. For details about creating ladder programs refer to the *CX-Programmer Operation Manual* (W414 or W425). After creating a ladder program, be sure to transfer it to the CPU Unit.

Notation Used in Ladder Program Diagrams

Bit/flag names in the < > symbols indicate outputs in allocated words. Bit/flag names in the ( ) symbols indicate inputs in allocated words.

In the following examples, the MC Unit is the CS1W-MC221 and the unit number is 00. Therefore, 30 words will be allocated to the MC Unit starting from CO 2000. Word Area words are from W00000 to W00008. The Input Unit corresponds to CIO 0000.

Ladder Program Input the ladder program shown below.

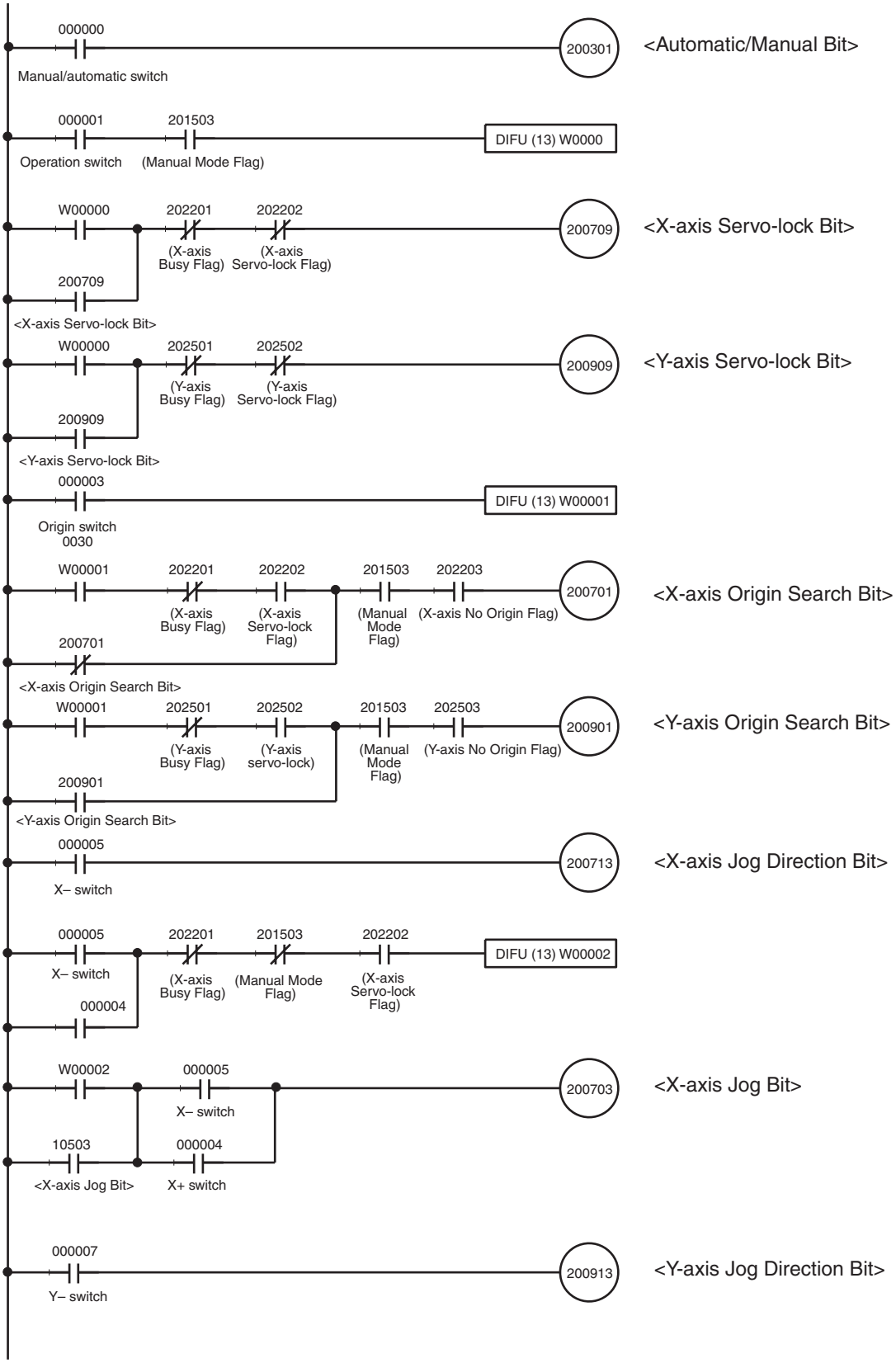

(Continued on next page.)

(Continued from previous page.)

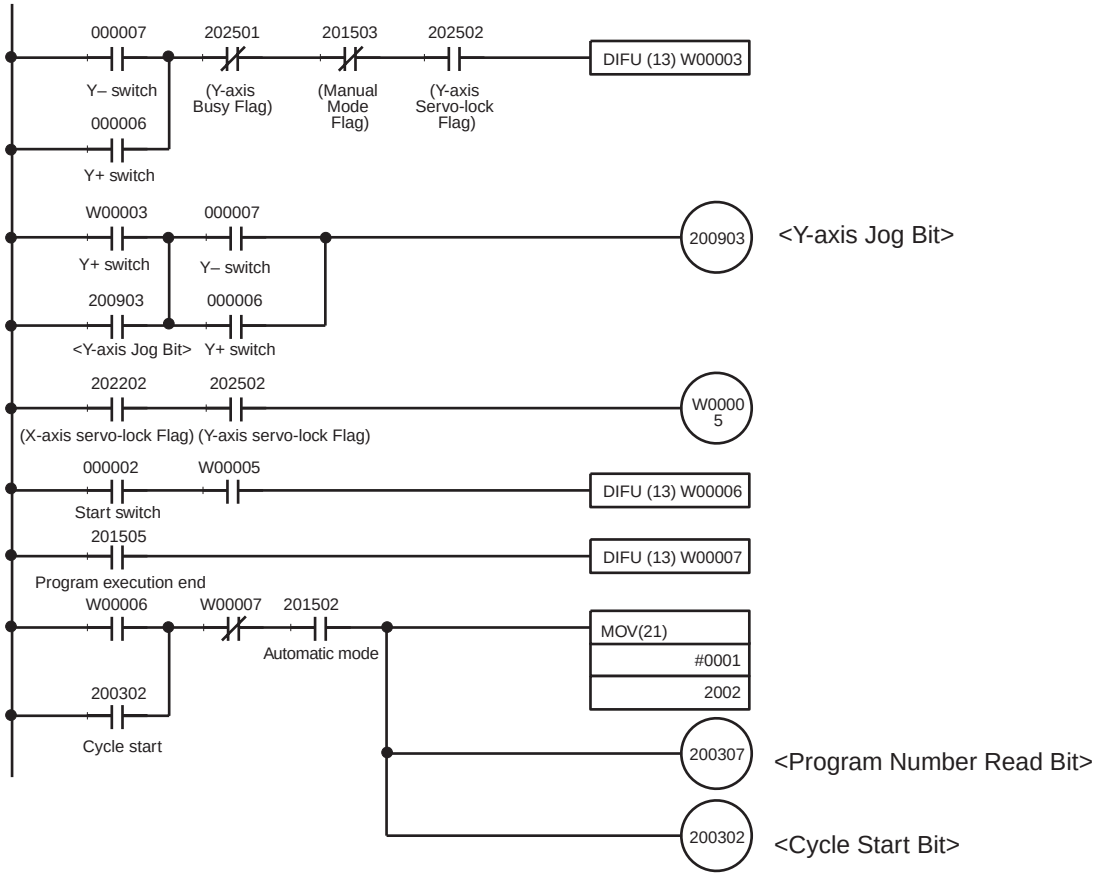

Note A task error reset is required for when an error occurs during trial operation. Add an error reset like the one shown below to the program.

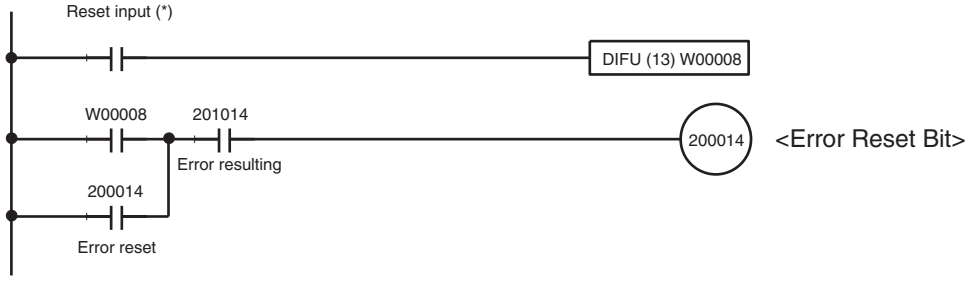

*Allocate I/O again for the reset input.

Insert CIO 201014 as an NC condition to break the holding section for each operation when an error occurs.

Transferring the Program

After the ladder program has been created, transfer it to the MC Unit. (Perform the procedure using CX-Programmer. Refer to the *CX-Programmer Operation Manual* (W414 or W425).)

Saving the Program

Save the ladder program to a data disk. (Perform the procedure using CX-Programmer. Refer to the *CX-Programmer Operation Manual* (W414 or W425)).

10) Trial Operation (Operation Check)

Note A simple explanation of the operation procedure is given below. For details, refer to the *CX-Motion Online Help*.

Use the following procedures to confirm correct operation of the MC program in Automatic Mode and servo-lock, origin search and jogging operations in Manual Mode.

Manual Mode

Power ON

If power is supplied to the MC Unit when the Servo Driver alarm input is already ON, an error will not be generated. An error will occur, however, if the alarm turns OFF and then ON again, or if an instruction that includes axis operation is performed with the alarm still ON. This feature allows greater flexibility with the sequence in which power is supplied to the MC Unit and the Servo Drive.

When operating the MC Unit online form a personal computer, the power supply for the personal computer must be ON first. Otherwise an error will occur.

MC Coordinate Displays

Display the MC coordinates in order to check the present position of each axis.

1,2,3... 1. Select ***Online/MC coordinate display***.

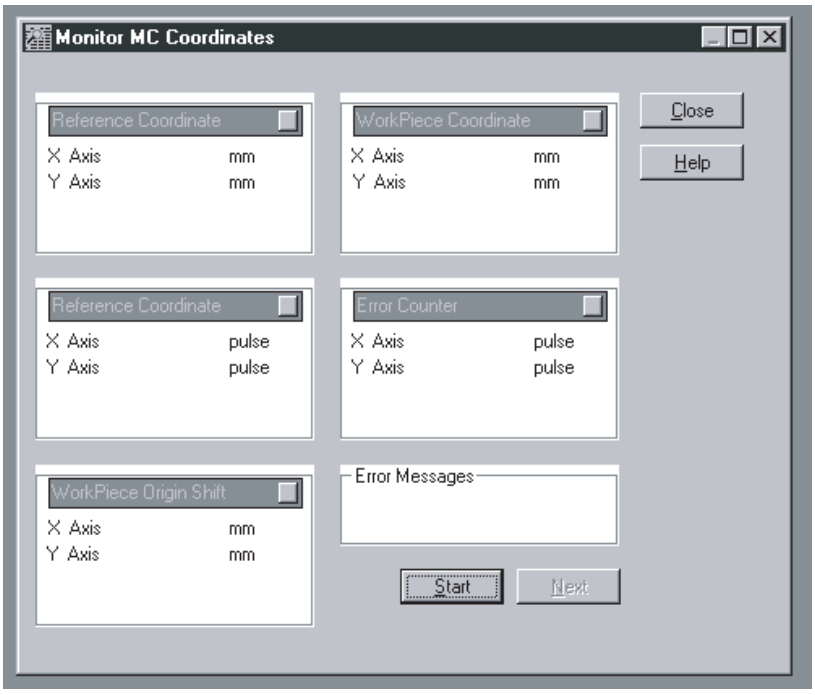

2. Click **Start**.

Servo-lock

Set the Automatic/Manual switch to Manual. Servo-lock the X and Y axes by pressing the Operation Buttons. By performing servo-lock, power will be supplied to each axis. While the servo is locked, the CW and CCW indicators will flash. On the MC coordinates display screen, the present position values and the error counter pulse numbers will constantly change in a neighborhood of 0.

Origin Search

Set the Automatic/Manual switch to Manual. Execute an origin search for the X and Y axes by pressing the Origin Buttons. The axes will move to the origin. When origin search has been completed, the reference coordinate system

present position values in the MC coordinates display screen will change to values near 0.

Jogging

Check that jogging is performed correctly for each axis. Set the Automatic/Manual Switch to Manual. Press and hold down the X+ button to move the X axis in the + direction. The present position value for the X axis on the MC monitoring screen will increase. Press and hold down the X– button to move the X axis in the – direction. The present position value for the X axis on the MC monitoring screen will decrease. Use the same procedure to confirm correct operation for the Y axis. Be sure that the present position value does not exceed the set software limit. A CW software limit or CCW software limit error will occur.

MC Program

Set the Automatic/Manual switch to Automatic. Press the Start Button to execute the MC program. From the MC task display screen, use the following procedure to display and check the MC program.

1,2,3...

1. Set the Automatic/Manual switch to Automatic.
2. Press the Start Button.
3. Select ***Online/MC task display***.

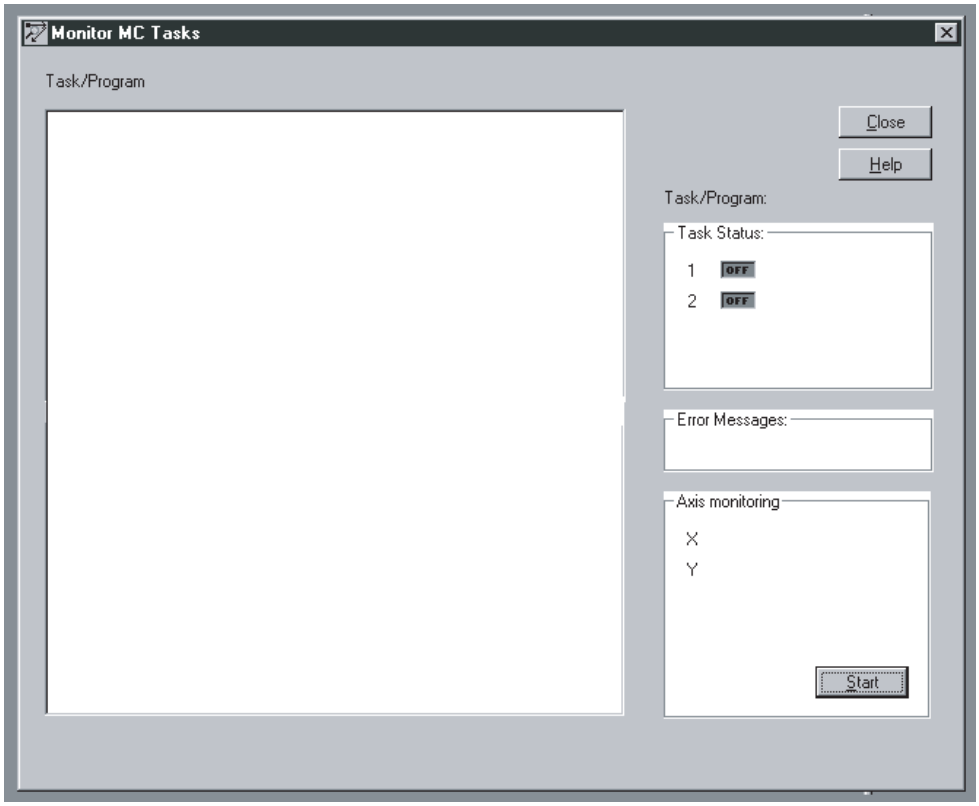

4. Click **Start**. The MC program will be displayed on the screen. The part of the program currently being executed will be displayed in reverse video.
5. Check that the axes have moved to the coordinates indicated in the lower right-hand area of the screen under ***Axis monitoring***.

11-2-2 Checking Operation from the Teaching Box

This section explains how to use the Teaching Box to execute the MC program and the jog operation. It explains cyclic execution, in which the specified program is executed from the beginning, and single-block execution, in which the specified program is executed one block at a time.

If servo-lock and origin search have not been executed using the switch box, execute the origin search from the Teaching Box after setting locking the servos before executing the MC program and jog operation.

Changing the Mode to T. BOX RESERVED

1,2,3... 1. Press the EXT Key.

```
EXT|    1/2
 1.CHANGE MODE
 2.SERVO LOCK
 3.SERVO FREE
```

2. Press 1.

```
EXT|-CHG MODE-
   | T.BOX
   | LIMITED
   |SWITCH:↑,↓
```

3. Press the Down Key. (Pressing the Up and Down Keys switches among the three modes.)

```
EXT|-CHG MODE-
   | T.BOX
   | RESERVED
   |SWITCH:↑,↓
```

Executing Servo-lock

1,2,3... 1. Select 2. SERVO LOCK from the Extension Mode Menu.

```
EXT|-SERVO LOCK-
   | 0.ALL AXES
   | 1.X    3.Z
   | 2.Y    4.U
```

2. Select all the axes.

```
EXT|-SERVO LOCK-
   | OK?
ALL|
   | YES / NO
```

The specified axis/axes are shown here.

3. Press the YES Key. The servos will be locked, and the following screen will be displayed.

```
EXT|-SERVO LOCK-
   |
ALL| COMPLETE!
   |
```

Executing Origin Search for All Axes

1,2,3... 1. Press the ORIG SRCH Key.

```
ORG|0.ALL AXES
   |1.X    3.Z
   |2.Y    4.U
   |
```

2. Select 0. ALL AXES. Press 1 or 2 when selecting an individual axis.

```
ORG|
   | OK?
ALL|
   | YES / NO
```

The specified axis/axes are shown here.

3. Press the YES Key. An origin search will be started and the present position monitoring screen will be displayed.

```
 ORG|X*    12.00
    |Y*    12.32
 ALL|Z*     0.00
    |U*     0.00
```

The asterisk (*) indicates that the origin is not established.

The present position will be refreshed for moving axes.

The origin search operations will be performed and the axes will stop at the reference coordinate system origins. The asterisks will disappear at that point, and the present position is shown as 0.

When the origin search operation has been completed for the specified axes, the following screen will be displayed.

```
ORG|
   |
ALL| COMPLETE!
   |
```

4. Press the CLR Key. The axis selection screen in step one of this procedure will return.

When an error occurs in the MC Unit or the Servo Driver, clear it by means of the following procedures.

Resetting MC Unit Errors

1,2,3... 1. Press the ERR CLR Key.

```
[RT]

  1.MC UNIT
  2.DRIVER
```

2. Press 1.

```
[RT]    MC UNIT

 RESET ERROR ?
   YES / NO
```

3. Press the YES Key. The error will be reset for the task in which the error occurred.

```
[RT]    MC UNIT

 ERROR RESET!
```

Resetting Servo Driver Errors

1,2,3...

1. Select 2.DRIVER from the MC Unit's Error Reset Procedure 1 Menu.

```
[RT]          DRIVER
        0.ALL AXES
        1.X    3.Z
        2.Y    4.U
```

2. Press a number from 0 to 2 to select the number of axes to be reset.

```
[RT]    DRIVER
 <ALL AXES>
 RESET ERROR ?
   YES / NO
```

The specified axes are displayed here.
0: All axes 1: X axis 2: Y axis

3. Press the YES Key. The error will be reset for the selected axes.

```
[RT]    DRIVER

 ERROR RESET!
```

Jogging

1,2,3...

1. Press the JOG Key. The Unit will go into Jog Mode and the following screen will be displayed.

```
JOG|X      0.00
   |Y      0.00
   |Z*     0.00
050|U*     0.00
```

The override values are displayed here. The default value is 50%. Press the Up and Down Keys to set the value from 10% to 100% in increments of 10%.

2. To execute jogging along the X or Y axes, press any of the following four jog keys: +X, +Y, –X, –Y. The specified axis will move in the specified direction, and the present position will be refreshed on the screen.

Executing Cyclic Execution

1,2,3...

1. Press the PROG EXEC Key.

```
RUN|1.CYCLE RUN
   |2.SINGLE RUN
   |
   |
```

2. Select 1. CYCLE RUN from the menu.

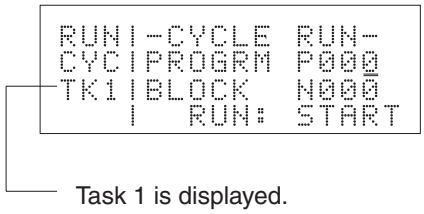

3. Specify the program number. In this case, the program number is 001, so just input 1.

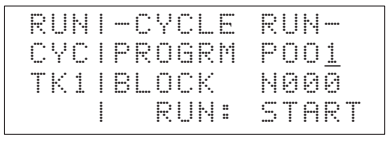

If the program is changed from CX-Motion, the program number must be entered again even if it is the same. If it is not entered again, an error will be generated. In this case program execution will begin from the first block.

4. Press the START Key.

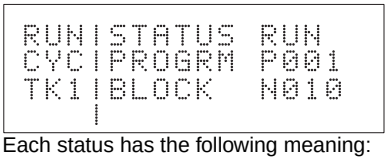

Each status has the following meaning:

RUN:	Program being executed.
END:	Program execution ended.
ERR:	Error occurred.
PAUSE:	Temporary suspension

When the PAUSE Key is pressed, program execution will be paused and the previous screen will be restored. Program execution is resumed by pressing the START Key. The program cannot be executed while an error is in effect. If the program number is entered again, program execution will begin from the first block.

5. Press the CLR Key after the program has been completed. The menu for selecting the operation mode will be restored. (The CLR Key is not effective during program execution.)

   If the status is either END or ERR, pressing the CLR Key will return to the restart screen.

Executing Single-block Execution

1,2,3... 1. Select 2.SINGLE RUN from the menu.

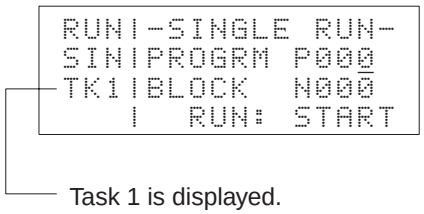

2. Specify the program number. In this case, the program number is 001, so just input 1. If the program number is already set to 001 after cyclic execution, there is no need to enter anything here.

3. Press the START Key. The first block of program number 001 will be executed. In this case, block N002 will be executed because the first block is a comment,.

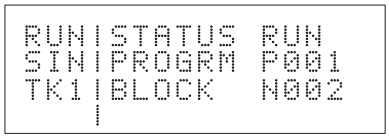

To halt the operation in progress, press the PAUSE Key.

4. When execution of the first block has been completed, PAUSE status will go into effect and program execution will be stopped. The number of the next block to be executed will be displayed.

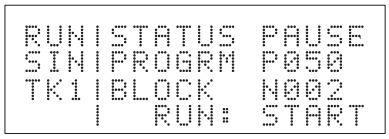

Press the PROG EXEC Key to execute the next block. Press the CLR Key to return to the program number input screen. Then press the CLR Key again to return to the operating mode menu.

11-3 Considerations When Starting Up the MC Unit

11-3-1 Setting the System Parameters

The main considerations when setting the machine parameters are explained below, taking U-series Servo Drivers as an example.

Motor Rotation Direction and Encoder Polarity

An OMRON Servomotor connected to the MC Unit will operate if the default values (forward for positive voltage, and forward for encoder increase) are set.

If the system is set for a right-hand ball screw connection, the default settings will produce a decrease in the present value as the table (workpiece) moves away from the Servomotor. To have the present value increase as the table (workpiece) moves away from the Servomotor with a right-hand ball screw connection, use either of the following two methods.

- Set the MC Unit parameter (rotation direction) so that the motor will reverse for a positive voltage and reverse for an encoder increase.
- Set the Servomotor's mode to Reverse Mode. For U-series Servomotors, turn ON bit 0 of Cn-02.

Encoder Resolution

The encoder resolution parameter sets the number of pulses (encoder frequency dividing ratio) that can be output from the Servo Driver per Servomotor revolution. For U-series Servomotors, set the encoder resolution according to the encoder frequency dividing ratio (Cn-0A), and not the number of encoder pulses parameter.

Note When a U-series Servo Driver with a capacity of 1 kW or more is used, a speed of up to 614.4 kpps is possible (when the encoder resolution is 8,192 and the maximum speed is 4,500 r/m). The maximum control speed of the MC Unit, however, is 500 kpps, so adjust the encoder resolution and the encoder frequency dividing ratio so that the speed will stay within this range.

Pulse Rate

With a ball screw connection, set the ball screw pitch (the distance advanced for one turn of the ball screw) for the numerator. Set the value derived by multiplying the encoder resolution by the ratio for the denominator. This number is a ratio of the number of millimeters advanced per pulse.

Maximum Number of Motor Revolutions

Set the rated number of revolutions for the motor (generally the catalog value).

Note

1. There is a difference between the acceleration/deceleration times set in the MC Unit and the Servo Driver. The MC Unit acceleration/deceleration time defines the time for accelerating and decelerating until the MC Unit's maximum feed rate or interpolation speed reference. The Servo Driver acceleration/deceleration time, in contrast, sets the delay time for accelerating to the speed reference that is given. When the Servo Driver acceleration/deceleration time is set, it lowers the gain for the system, so do not make this setting when using a Servo Driver in combination with an MC Unit.
2. When an S-curve is set in the MC Unit and a software start is set in the Servo Driver, it puts the MC outputs through a filter and the gain is extremely decreased. Set both the S-curve and software start may produce faulty operation.

Transferring and Saving Data

When using CX-Motion to transfer data to the MC Unit, select Save/Transfer (Computer → MC). Parameters, position data, programs, and so on, are transferred between a file (on a floppy or hard disk) and the MC Unit, so they must be saved or the MC Unit will operate using the old data. After transferring the data, be sure to save it to flash memory before turning OFF the power.

If the machine parameters or Unit parameters are changed and transferred, a system setup error will occur. It can be cleared by turning OFF the power and restarting the Unit. The error will appear to be cleared by just executing an error reset, but internally the old system parameters will remain in effect. The program cannot be correctly transferred while this condition persists, so whenever a system setup error occurs, be sure to turn OFF the power and use the Restart Bit in the CPU Unit to restart the Unit. Then transfer the program after the restart.

Backing Up Data to Flash Memory

With the CS1W-MC421 and CS1W-MC221, memory is backed up to flash memory following the transfer of system parameters and other data. The data in flash memory is always reloaded when the MC Unit is started. If data is not written to flash memory, it will be valid only until the power is turned OFF, so be sure to save it to flash memory after transferring it if it is required.

11-3-2 Considerations When Starting Up or Making Adjustments

Adjusting the Wiring Check Parameters

An error may occur if the wiring check parameters are left at their default settings. These settings are made assuming a suitable load, but the load in the actual system may be different and a wiring error may be incorrectly detected. If a wiring error does occur, refer to *2-5 Wiring Check Troubleshooting* and adjust the wiring check parameters.

11-3-3 Changing the Teaching Box Mode for Trial Operation

When the Teaching Box is connected to the MC Unit, it first goes into T. BOX LIMITED mode, in which only monitoring is possible. To execute the program or jog, the mode must be switched to either T. BOX RESERVED or T. BOX ENABLED. The operating mode can be changed only from the Teaching Box itself.

For the procedure for changing the Teaching Box mode to either T. BOX RESERVED or T. BOX ENABLED, refer to *Changing the Mode to T. BOX RESERVED* in *11-2-2 Checking Operation from the Teaching Box*.

To change position data from the Teaching Box, press the EXT Key, select 4. Memory Protect, and use the Up Key or Down Key to clear the memory protection.

Operations from the CPU Unit are not possible when the Teaching Box is in any mode other than T. BOX LIMITED.

While operations are being executed from the Teaching Box in T. BOX RESERVED or T. BOX ENABLED Mode, other operations will not be carried out even if commands are given from the CPU Unit.

For details on Teaching Box operations, refer to the *Teaching Box Operation Manual* (W320).

SECTION 12
Troubleshooting

This section explains the troubleshooting procedures to be employed if problems should occur in MC Unit operation.

12-1 Troubleshooting Tables 522
12-1-1 Items to Check First 522
12-1-2 Problems and Countermeasures 523
12-2 Error Indicators 531
12-2-1 Errors During Initial Processing 532
12-2-2 Errors During Normal Operation 532
12-3 System Error Codes 532
12-4 Task Error Codes 536
12-5 Axis Error Codes 541
12-6 Error Log 546

12-1 Troubleshooting Tables

This section provides tables to refer to when a particular problem arises. The tables provide a general description of the nature of various potential problems, the probable cause, items to check, and suggested countermeasures.

For more detailed explanations, refer to sections 13-2 onwards.

12-1-1 Items to Check First

If a problem has developed, check the following items first.

No.	Category	Items to check	Checked
1	Installation environment	Is the environment dusty?	
2		Are there conducting materials (such as metals, carbon, etc.) in the environment that could get into the equipment?	
3		Is the ambient temperature higher than the level shown in the specifications?	
4		Is there excessive moisture (from humidity, water usage, etc.)?	
5		Are there corrosive materials in the environment (acid, salt, sulphur, etc.)?	
6		Is there a source of noise nearby (such as a welding machine or inverter)?	
7	Wiring	Are signal lines and power lines placed in separate ducts?	
8		Is there proper grounding?	
9		Does the power supply have a noise filter?	
10	Recent changes	Has there been recent construction (involving welding, and so on)?	
11		Has a power supply been added recently?	
12		Have there been changes or additions to the system (including programs)?	
13	Errors	Was there any lightning nearby?	
14		Was there any interruption caused by a fuse or breaker?	
15		Is the power OFF?	

12-1-2 Problems and Countermeasures

- If any errors occur that are not covered in the following tables, print out the contents of the PLC Interface Area and related DM Area words from the CX-Programmer or other Programming Device and provide them to your OMRON representative.
- If an operation cannot be properly executed, it may be that a program or parameters were not saved when they were transferred. Upload the parameters, programs, or position data from the MC Unit and open the file and check to be sure that the data was transferred and saved properly.
- If an operation cannot be properly executed, there may be an error in data or signal exchange between the ladder program and the MC Unit. Try performing the operation with the Teaching Box. If the operation can be performed using the Teaching Box, then there may be a problem with the ladder program. Use the CX-Programmer data trace function to check whether the data is being exchanged at the correct timing.

No.	Problem	Probable causes	Items to check	Remedy
1	The CPU Unit's RUN indicator does not light when the power is turned ON.	Power supply lines are wired incorrectly.	Check the power supply wiring.	Correct the power supply wiring.
2		The power supply voltage is low.	Check the power supply voltage.	Check the power supply capacity and correct the power supply.
3		An internal fuse has blown.	Check the fuses.	Replace the fuse and determine what caused it to blow. (Refer to the troubleshooting section in the applicable CPU Unit operation manual.)
4		The power supply is defective.	Check the power supply.	Replace the power supply.
5	Only the MC Unit's RUN indicator fails to light when the power is turned ON.	The power supply capacity is insufficient.	Add up the power supply capacity for all of the Units mounted to the same Backplane, including the CPU Unit, and compare that to the power supply capacity of the Power Supply Unit. If the combined capacity of the Units is greater than that of the Power Supply Unit, then they cannot be properly used.	Increase the power supply capacity. Change the configuration so that the power supply capacity at the Backplane is not exceeded.
6		The MC Unit is defective.		Replace the MC Unit.

No.	Problem	Probable causes	Items to check	Remedy
7	Servo cannot be locked.	The MC Unit is not operating.	Is the RUN indicator lit?	Check No. 5.
8		The servo cannot be locked because the Unit is not in Automatic Mode.	Check the Automatic Mode Bit. Set the mode to Program Mode and forcibly set only the Servo-lock Bit.	Set the mode to Automatic Mode and then execute servo-lock. (Change the ladder program.)
9		Instructions cannot be received from the ladder program because the Teaching Box is in T. BOX ENABLED or T. BOX RESERVED Mode.	Disconnect the Teaching Box and check again.	Disconnect the Teaching Box or put the Teaching Box into T. BOX LIMITED Mode.
10		Another axis control bit is ON at the same time.	Check whether another axis control bit is ON at the same time. Try executing servo-lock using the Teaching Box.	Turn OFF the other axis control bit and turn ON the servo-lock bit. (Change the ladder program.)
11		The MC Unit is defective.		Replace the MC Unit.
12	The motor is not turning.	The servo is not locked.	Check whether the Servo Driver is operating. Check the MC Unit axis status to see whether servo is locked.	Execute servo-lock and then turn the motor. (Change the ladder program.)
13		The wiring is incorrect between the MC Unit and the Servo Driver.	Check the wiring with a tester. Change the connecting cables.	Correct the wiring.
14		A run prohibit input, such as POT or NOT, is ON for a U-series Servo Driver (when Cn-01 bits 2 and 3 are 0).	Check the run prohibit inputs.	Turn OFF the Servo Driver run prohibit input. Make the setting so that the Servo Driver run prohibit inputs will not be used.
15		The Servo Driver is in the internally set speed control mode (and is not receiving MC Unit speed referenced).	Check the Servo Driver setting.	Correct the Servo Driver setting.
16		A Servo Driver alarm has been generated.	Check the contents of the Servo Driver alarm.	If there is an alarm, then follow the instructions.
17		The mechanical axis is locked.	Check whether there is a mechanical limit or lock in effect.	Manually release the mechanical lock.
18		The MC Unit is defective.		Replace the MC Unit.

No.	Problem	Probable causes	Items to check	Remedy
19	Origin search cannot be executed.	An error or warning has been generated.	Check the contents of the error or warning.	If there is an error or warning, then follow the instructions.
20		The MC Unit's origin proximity input is wired incorrectly.	Use the Teaching Box's input signal monitor function to check whether the sensors are turning ON and OFF normally.	Correct the wiring.
21		The Servo Driver phase Z is incorrectly wired to the MC Unit.	Check the phase Z wiring.	Correct the wiring.
22		The direction of rotation does not match the direction of the limit input.	If axis rotation is reaching the mechanical limit without reversing direction, use the Teaching Box to check whether the limit inputs are turning ON and OFF normally.	Correct the limit input wiring.
23		The limit input is wired incorrectly.	Check the limit input wiring.	Correct the limit input wiring.
24		Origin search cannot be executed because the Unit is in Automatic Mode.	Monitor the Automatic Mode Bit. Set the mode to Program Mode and forcibly set only the Servo-lock Bit.	Set the mode to Automatic Mode and then execute servo-lock. (Change the ladder program.)
25		Instructions cannot be received from the ladder program because the Teaching Box is in T. BOX ENABLED or T. BOX RESERVED Mode.	Disconnect the Teaching Box and check again.	Disconnect the Teaching Box or put the Teaching Box into T. BOX LIMITED Mode.
26		Another axis control bit is ON at the same time.	Check whether another axis control bit is ON at the same time. Try executing origin using the Teaching Box.	Turn OFF the other axis control bit and turn ON the origin search bit. (Change the ladder program.)
27		Not entering the in-position range.	Is the MC parameter's in-position width too narrow? Is the Servo Driver gain too low? Is the servo speed reference offset incorrect?	Increase the MC parameter's in-position width. Increase the Servo Driver/MC Unit gain. Adjust the servo speed reference offset (zero balance).
28		The low-speed origin search feed rate is too fast.	Check the low-speed origin search feed rate.	Decrease the low-speed origin search feed rate.
29		The parameters are set incorrectly.	Check the MC Unit parameters with the CX-Motion. If the single-direction mode is specified for a system in which limits are set for both sides, for example, an error will occur and operation will stop when a limit is detected.	Set the parameters correctly, transfer them to the MC Unit, and write them to flash memory.
30		The MC Unit is defective.	---	Replace the MC Unit.

No.	Problem	Probable causes	Items to check	Remedy
31	The origin established by the origin search sometimes changes.	There is some looseness in couplings or other mechanical connections.	Check whether there is any deviation from the markings at the couplings between the motor and axes, or at any other connections.	Tighten up the connections.
32		There is no phase-Z margin.	Monitor the phase-Z margin. If the value is near the Servomotor's encoder resolution x the ratio (1, 2, or 4), or near zero, a deviation of one motor revolution may occur at the time of the origin search due to even a minute change in the timing of sensor inputs.	Remove the motor coupling and adjust it by about a 1/4 turn, so that the phase-Z margin pulses will be about 1/2 of the Servomotor's encoder resolution x the ratio (1, 2, or 4), and then try executing the origin search again.
33	Motor rotation is unstable.	The parameters are set incorrectly.	Check the MC Unit parameters with the CX-Motion.	Set the parameters correctly, transfer them to the MC Unit, and write them to flash memory.
34		The Servo Motor power lines and encoder lines are wired incorrectly.	Check the Servo Motor power lines and encoder lines.	Correct the wiring.
35		The speed reference (XOUT/YOUT) polarity is wrong.	Check the speed reference wiring.	Correct the wiring.
36		There is eccentricity in the couplings connecting the Servomotor axis and the mechanical system. There may be loose screws or load torque fluctuation due to the meshing of pulley gears.	Check the machinery. Try turning the motor with no load (i.e., with the machinery removed from the coupling).	Adjust the machinery.
37		The gain adjustment is insufficient.	---	Execute Servomotor autotuning. Manually adjust the Servomotor gain. Adjust the servo parameters with either the CX-Motion or the Teaching Box.
38		The wrong Servomotor is selected (so it cannot be adjusted).	Check the torque and inertia ratings and select another Servomotor.	Change to a suitable Servomotor.
39		The Servomotor bearings are damaged.	Turn OFF the Servo Driver power. If the Servomotor has a brake, turn ON the brake power supply and release the brake, and then manually turn the motor's output axis with the motor's power line disconnected (because the dynamic brake may be applied).	Replace the Servomotor.
40		The Servomotor windings are disconnected.	With a tester, check resistance between the Servomotor's U, V, and W power lines. There should be a proper balance between the line resistances.	Replace the Servomotor.

No.	Problem	Probable causes	Items to check	Remedy
41	Rotation is reversed.	The Servo Driver is set for reverse rotation.	If the LED indicator on the front panel matches the jogging direction during jogging operations, and if the direction of rotation is reversed, check whether the Servo Driver is set for reverse rotation.	Correct the setting for the direction of Servo Driver rotation.
42		The feedback signal (phase A/B) is reversed and the parameter is set for reverse rotation.	Check whether the feedback signal (phase A/B) is reversed and whether the parameter is set for reverse rotation.	Correct the feedback signal (phase A/B) wiring. Correct the reverse rotation setting at the MC Unit parameters.
43		During an origin search the origin proximity sensor polarity does not match the parameter setting (in the MC Unit) for the origin proximity input polarity.	Check the parameter setting and the sensor polarity.	Correct the parameter setting.
44		During an origin search, the origin proximity input wiring is faulty.	With the Teaching Box, check whether the origin proximity input status is correct.	Correct the origin proximity input wiring.
45	The positioning completed signal is not output or is delayed. (The next operation cannot be started.)	The in-position width set in the MC Unit parameters is too narrow, and the axis is not in the in-position range. (If it is not in the in-position range, the next operation cannot be started because the preceding operation is not completed.)	---	Increase the in-position width set in the MC Unit parameters.
46		The Servo Driver gain is too low.	---	Adjust the Servo Driver gain and increase the MC Unit position loop gain.
47		The servo speed reference is incorrect.	---	Adjust the servo speed reference offset (zero balance).
48		The axis is not in the in-position range due to external pressure applied when positioning stopped.	With the CX-Motion or the Teaching Box, monitor the error counter and check whether the axis is in the in-position range.	If positioning is stopped outside of the in-position range due to external pressure, the G-language program must be changed so that in-position monitoring (Pass Mode operation) will not be performed.
49	There are unusual noises.	The machinery is vibrating.	Check for foreign objects in the machinery's moving parts, and inspect for damage, deformation, and looseness.	Make any necessary repairs.
50		The speed loop gain is insufficient. (The gain is too high.)	---	Perform autotuning. Manually adjust (decrease) the gain.
51		The wrong Servomotor is selected (so it cannot be adjusted).	Check the torque and inertia ratings and select another Servomotor.	Change to a suitable Servomotor.
52		There is eccentricity in the couplings connecting the Servomotor axis and the mechanical system.	---	Adjust the mounting of the Servomotor and machinery.

No.	Problem	Probable causes	Items to check	Remedy
53	Vibration is occurring at the same frequency as the application frequency.	Inductive noise is being generated.	Check whether the Servo Driver control signals are too long. Check whether the control signal lines and power lines are bundled together.	Shorten the control signals. Separate the control signal lines and the power lines. Use a low-impedance power supply for the control signal lines.
54		The control signals are not properly grounded.	Check whether the control signal shield is properly grounded at the Servo Driver. Check whether the control signal lines are in contact with the ground.	Correct the wiring.
55		Twisted-pair or shielded cable is not being used between the MC Unit and the Servo Driver.	Check whether twisted-pair cables are used for the encoder signals and speed references, and whether the cables are shielded.	Use twisted-pair and shielded cable as in the wiring examples.
56	The motor axis is vibrating unsteadily.	The gain adjustment is insufficient. (The gain is too low.)	---	Perform autotuning. Manually adjust (increase) the gain.
57		The gain cannot be adjusted because the mechanical rigidity is too weak.	This particularly tends to occur in systems with vertical axes, scalar robots, palletizers, and so on, which place a torsion load on the axes.	Increase the mechanical rigidity. Re-adjust the gain.
58		The mechanical structure is producing stick slip (high-viscosity statical friction).	---	Perform autotuning. Manually adjust the gain.
59		The wrong Servomotor is selected (so it cannot be adjusted).	Check the torque and inertia ratings and select another Servomotor.	Change to a suitable Servomotor.
60		The Servomotor or the Servo Driver is defective.	---	Replace the Servomotor or the Servo Driver.

No.	Problem	Probable causes	Items to check	Remedy
61	There is slippage in positioning.	The slippage is not constant. Malfunction due to noise.	Is shielded cable being used?	Use shielded cable.
62		The shield is not properly grounded at the Servo Driver.	Check the ground wiring.	Correct the wiring.
63		The MC Unit's output power supply is not separated from other power supplies.	Check whether the MC Unit's output power supply is separated from other power supplies.	Separate the MC output power supply from other power supplies.
64				Install a noise filter at the primary side of the MC Unit's output power supply.
65				Ground the MC Unit's output power supply.
66		Twisted-pair cable is not being used for the pulse outputs.	Check whether twisted-pair cable is being used for the pulse outputs. (The connected voltage is 0 V or 5/24 VDC.)	Use twisted-pair cable for pulse outputs.
67		The cable between the MC Unit and the Servo Driver is not separated from other power lines.	Check whether the cable is separated from other power lines.	Separate the cable from other power lines.
68		The cable between the MC Unit and the Servo Driver is too long.	Check whether the cable is two meters or less.	The maximum cable length is two meters.
69		There is malfunctioning due to noise from a welding machine, inverter, etc.	Check whether there is a device such as a welding machine or inverter nearby.	Separate the Unit from the noise source.
70		The RUN signal turns OFF during operation.	Check whether the Servo Driver's RUN signal is turning OFF during operation.	Turn ON the RUN signal with the correct timing.
71		There is slippage in the mechanical system.	Check for slippage by marking the mechanical connections.	Tighten the connections.
72	An error has occurred in the MC Unit wiring.	There is an offset in the MC Unit's speed reference voltage and the Servo Driver's speed reference input section.	---	Adjust the speed reference offset at the Servo Driver with the MC Unit connected and servo OFF.
73		The encoder signal and speed reference wiring between the MC Unit and the Servo Driver is faulty or disconnected.	Set the wiring check parameter to "no wiring check," and check to see if there is motor runaway. (Perform the check with the motor coupling disconnected.) If runaway occurs, then there is a wiring error.	Correct the wiring.
74		An MC Unit parameter setting is wrong.	Set the wiring check parameter for no wiring check, and check to see if there is motor runaway. (Perform the check with the motor coupling disconnected.) If runaway does not occur, then a parameter setting is wrong.	Set the encoder polarity to reverse in the MC Unit's machine parameters.

No.	Problem	Probable causes	Items to check	Remedy
75	The MC Unit cannot receive absolute data (when an absolute encoder is used).	The Servo Driver's setup parameters are not correct.	---	Make the following parameter settings. With U-series Servo Drivers, turn OFF Cn-01 bit 1, turn ON Cn-01 bit E, and turn OFF Cn-02 bit 1. With W-series Servo Drivers, set Pn002 digit number 2 to 0. With G-series Servo Drivers, set Pn0B to 0 or 2.
76	The absolute values taken when the servo is locked are different from those when the power is turned OFF (when an absolute encoder is used).	There is mechanical slippage.	Check whether the motor turns while the power is OFF.	---
77		The MC Unit and Servo Driver parameter settings are not correct.	Check the MC Unit and Servo Driver parameters.	With U-series Servo Drivers, set Cn-02 bit 0 to 0. With W-series Servo Drivers, set Pn000 digit number 0 to 0. With G-series Servo Drivers, set Pn46 and Pn51 to 0. Set the MC Unit's machine parameters to forward with plus voltage and forward with encoder increase, or to reverse with plus voltage and reverse with encoder increase.
78	The speed drops (comes to a temporary stop) during pass operations.	The minimum pass time is not assured.	Calculate the travel time by dividing the travel distance by the speed, and check whether the minimum pass time is being satisfied.	Calculate the minimum pass time plus the operations in progress, and adjust the target distance and speed so that the travel time will be at least that much.
79	When the G-language program is paused and then restarted, it starts over from the beginning instead of continuing from the pause.	When the Cycle Start Bit is turned ON at the restart, the Program Number Read Bit is being turned ON as well.	Check the ladder program or perform a data trace.	To resume program execution from the point where it was paused, make sure the Program Number Read Bit is OFF when restarting the program executing by turning ON the Cycle Start Bit.

No.	Problem	Probable causes	Items to check	Remedy
80	The position is slipping. When the servo is locked, the present position changes (when an absolute encoder is used).	The Servo Driver's encoder frequency dividing ratio setting and the MC Unit's encoder resolution (parameter setting) are different.	When the position slips without changing the sign, the slippage amount will change roughly in proportion to the distance from the origin.	Set the MC Unit's encoder resolution to the same value as the Servo Driver's encoder frequency dividing ratio setting (U Series: Cn-0A; W Series: Pn201, G Series: Pn44). With G-series Servo Drivers, set Pn45 to 0.
81		The Servo Driver's reverse mode setting and the MC Unit's parameters do not match.	The present position absolute value does not change, but the sign changes.	Turn OFF Cn-02, bit 0 (the servo reverse mode setting). Set the MC Unit parameters to a combination of either of the following: Forward with plus voltage and forward with encoder increase, or reverse with plus voltage and reverse with encoder increase.
82	Self-holding is not cleared for the start line of the program as it is shown in the manual. Program execution does not end even when the operation is completed.	The time required for the operation is shorter than the CPU Unit's cycle time, so the Program Execution End signal is not being transmitted to the CPU Unit.	This occurs when the target position is the same as or right next to the present position before starting.	Insert "G04 0.1" (DWELL TIMER) in front of the G79 in the MC Unit's G-language program.
83	Position slippage has occurred when using an absolute encoder for a G-series Servo Driver.	The axis was moving when the servo was locked.	Check if the axis is stopped when the servo is locked.	Stop the axis before locking the servo.

12-2 Error Indicators

The following errors are displayed at the LED indicators at the top of the MC Unit's front panel.

CS1W-MC221

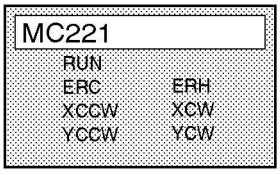

CS1W-MC421

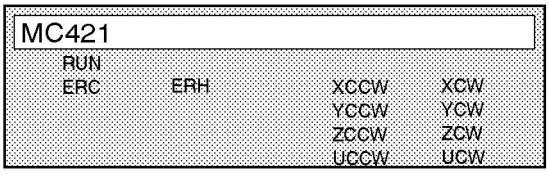

12-2-1 Errors During Initial Processing

The following table shows the errors that occur during the MC Unit's initialization processing.

RUN	ERC	ERH	XCCW	XCW	YCCW	YCW	Error	Probable causes	Remedy
OFF	OFF	OFF	OFF	OFF	OFF	OFF	Watchdog timer timeout error	The MC Unit's watchdog timer has timed out.	Replace the MC Unit.
OFF	OFF	ON	OFF	OFF	OFF	OFF	Setup error	One of the following setup errors occurred: Illegal unit number Unit number duplication Cyclic initial error Unit number setting error	Set the correct unit number and turn ON the power again.
OFF	ON	ON	OFF	OFF	OFF	OFF	Unit classification error	The Unit classification was incorrectly set.	Replace the MC Unit.
OFF	ON	OFF	ON	OFF	OFF	OFF	EEPROM error	An error occurred in EEPROM.	
OFF	ON	OFF	OFF	ON	OFF	OFF	RAM error	An error occurred in RAM.	
OFF	ON	OFF	OFF	OFF	ON	OFF	CPU error	An error occurred at the CPU.	
OFF	ON	OFF	OFF	OFF	OFF	ON	System software error	The system software is damaged.	

12-2-2 Errors During Normal Operation

RUN	ERC	ERH	XCCW	XCW	YCCW	YCW	Error	Probable causes	Remedy
ON	OFF	OFF	---	---	---	---	(Normal)	---	---
ON	OFF	ON	OFF	OFF	OFF	OFF	PLC error	One of the following errors occurred at the CPU Unit: Watch dog timer operation Bus error Cyclic monitor error	Extend the cyclic monitor time. If the error recurs, replace the CPU Unit.
ON	ON	OFF	OFF	OFF	OFF	OFF	Unit error	An error occurred at the MC Unit.	Check the error code and apply the appropriate remedy.
ON	ON	OFF	OFF	OFF	ON	OFF	CPU error	An error occurred at the MC Unit's CPU.	Replace the MC Unit.

Error codes are explained in *12-3 System Error Codes* to *12-5 Axis Error Codes*.

The error code that occurs first will be output to word n+11 (MC221) or n+19 (MC421) in the PLC Interface Area.

12-3 System Error Codes

When a system error occurs, the Error Flag turns ON in the PLC Interface Area and an error code is output. With the MC221, bit 14 of word n+10 turns ON, and a 4-digit error code is output in hexadecimal to word n+11. With the MC421, bit 14 of word n+18 turns ON, and a 4-digit error code is output in hexadecimal to word n+19. The meanings of the error codes are explained in the error code tables provided on the following pages.

Explanation of Tables

Under the *Code* heading, the 4-digit hexadecimal code that is output by the MC Unit is given first. The number given below it in parentheses is the way it appears when decimal display is selected at the Programming Console.

Under the *Error name* heading, the actual error name is given first and the name as it appears in the MX-Motion and the Teaching Box is given below it in parentheses.

The three methods of stopping (deceleration stop, accumulated pulse stop, and emergency stop) are explained below.

Deceleration Stop

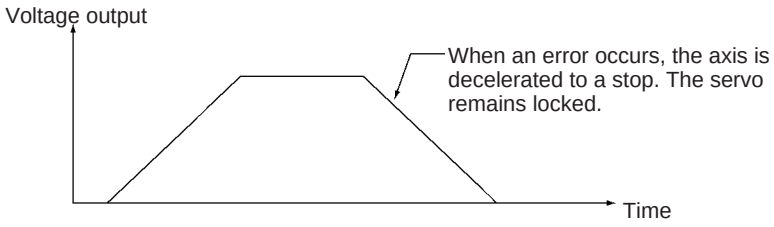

Accumulated Pulse Stop

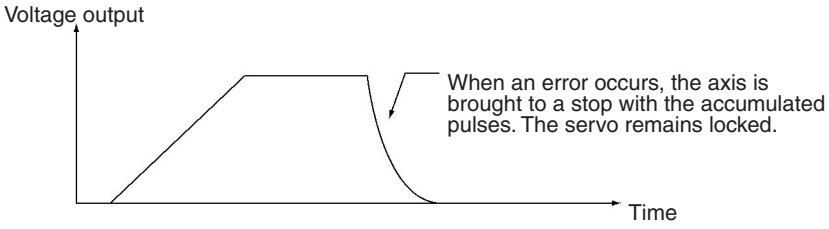

Emergency Stop

Brake Signals Enabled

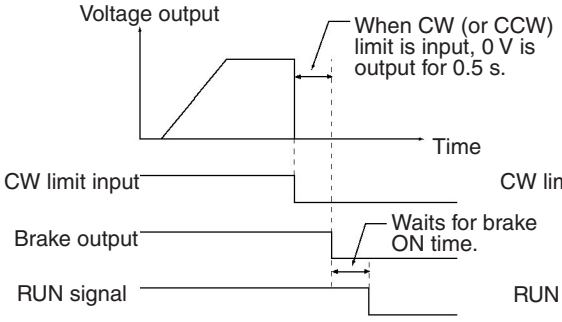

Brake Signals Disabled

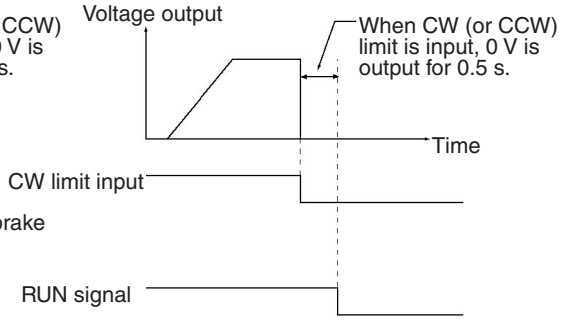

Feedback control is not performed while outputting 0 V and while waiting for the brake to turn ON after outputting 0 V. It is thus possible that the axis will be rotating. (Feedback control is performed while waiting for the brake to turn ON for a servo unlock command, and thus the axis will not rotate.)

Code	Error	Error Processing	Stop method
0001 (0001)	System parameters destroyed (SYS PARA CORRUPT) The Memory Card data is corrupted or an attempt was made to restore data for a different model or different version of CX-Motion.	The system parameters have been destroyed. (Checked when power is turned ON.) Download the system parameters from the CX-Motion again, write them to the flash memory, and then turn the power OFF and ON. The system parameters can be destroyed by any of the following: The memory data might have been destroyed by noise. The PLC (MC Unit) might have been turned OFF while data was being written to the flash memory. Restore data is corrupted. The restore data is for a different model or a different version of CX-Motion. This error cannot be cleared by an error reset.	---
0002 (0002)	Wrong number of tasks (TASK NOT CONSIST)	The number of tasks registered in the system parameters does not match the number registered in the program. (Checked when power is turned ON.) Either delete all programs using the CX-Motion or download system parameters with the number of tasks that matches the number registered in the program. The error is cleared automatically when all programs are deleted. Download the program(s) again and write the program(s) to the flash memory. When downloading the system parameters again, turn the Unit's power OFF and then ON again. This error can be caused by any of the following: The programs were not all deleted in spite of the changed system parameter task configuration. The system parameters that were downloaded had a different number of tasks registered. The memory data might have been destroyed by noise. The PLC (MC Unit) might have been turned OFF while data was being written to the flash memory. This error cannot be cleared by an error reset.	Deceleration stop
0003 (0003)	Task 1 program destroyed (TASK 1 PROG CORR)	The task 1 program has been corrupted. (Checked when power is turned ON.) Delete all task 1 programs using the CX-Motion and the error will be cleared automatically, then download the programs again and write them to the flash memory. The programs can be destroyed by any of the following: The memory data might have been destroyed by noise. The PLC (MC Unit) might have been turned OFF while data was being written to the flash memory. This error cannot be cleared by an error reset.	---
0004 (0004)	Task 2 program destroyed (TASK 2 PROG CORR)	The task 2 program has been corrupted. (Checked when power is turned ON.) Refer to error processing for error code 0003.	---
0005 (0005)	Task 3 program destroyed (TASK 3 PROG CORR)	The task 3 program has been corrupted. (Checked when power is turned ON.) Refer to error processing for error code 0003.	---
0006 (0006)	Task 4 program destroyed (TASK 4 PROG CORR)	The task 4 program has been corrupted. (Checked when power is turned ON.) Refer to error processing for error code 0003.	---

Code	Error	Error Processing	Stop method
0007 (0007)	Fatal CPU bus error (CPU BUS STOP ERR)	Cyclic processing (periodic refresh processing) with the CPU Unit was not executed. (Always checked.) The fatal CPU bus error may have been caused by the following: An end refresh prohibition is set in the CPU Unit. The ladder program's scan time is too long, and it exceeded the CPU Unit's cyclic monitor time. In these cases, perform the following: Clear the end refresh prohibition at the CPU Unit. Extend the CPU Unit's cyclic monitor time. If this error occurs, turn ON the power supply again or restart from the CPU Unit. This error cannot be cleared by an error reset.	Deceleration stop
0009 (0009)	Fatal PLC error (PLC STOP ERROR)	A fatal or non-fatal error was generated at the CPU Unit. (Always checked.) First remove the cause of the error. For information on fatal and non-fatal errors, refer to the applicable PLC operation manual. If the error recurs after the cause has been cleared, check to be sure that the MC Unit is securely mounted to the Backplane (e.g., that no screws are loose). If the error still continues to occur after that, either the MC Unit or the CPU Unit may be malfunctioning. Replace the MC Unit, the CPU Unit, or the Backplane. If this error occurs, turn ON the power supply again or restart from the PLC. This error cannot be cleared by an error reset.	Emergency stop
000A (0010)	Deceleration stop (DECEL STOP)	The Teaching Box's deceleration stop key was pressed. Reset the error after checking for any unsafe conditions.	Deceleration stop
000B (0011)	Setup error (SYSTEM SET ERROR)	System parameters with new Unit or machine parameters were downloaded. Write the system parameters to the flash memory with the CX-Motion or Teaching Box and then turn the power OFF and ON. The error can be cleared by an error reset, but the Unit will operate with the old parameters unless the power is turned OFF and then ON again.	Deceleration stop
000C (0012)	Illegal data (DATA ERROR)	Position data was destroyed when it was received with the IORD instruction. The error can be cleared by an error reset, but transfer the position data again. The position data can be destroyed by external noise.	Deceleration stop
000D (0013)	Error history corrupted (ERR HISTORY CORP)	The error log data has been corrupted. (Checked when power is turned ON.) When error log data is corrupted, the error log will automatically be initialized (i.e., all of the error records will be cleared). Either execute an error reset, turn ON the power again, or restart from the PLC. The error log corruption may have been caused by external noise or a problem with EEPROM.	Deceleration stop
000E (0014)	IORD syntax error (IORD SYNTAX ERR)	One of the following errors occurred when the IORD instruction was executed. The data address is not within the acceptable range. The number of transfer data items is not within the acceptable range. The number of transfer data items is not in 4-byte units. Set the correct data and execute the IORD instruction again.	Deceleration stop

Code	Error	Error Processing	Stop method
000F (0015)	IOWR syntax error (IOWR SYNTAX ERR)	One of the following errors occurred when the IOWR instruction was executed. The data address is not within the acceptable range. The number of transfer data items is not within the acceptable range. Example: When rewriting a 4-byte parameter, 8 or 12 bytes were specified. The number of transfer data items is not in 4-byte units. Set the correct data and execute the IOWR instruction again.	Deceleration stop
0010 (0016)	IOWR data error (IOWR DATA ERR)	The following error occurred in data to be written to the MC Unit when the IOWR instruction was executed. The data is not within the acceptable range. Set the correct data and executed the IOWR instruction again.	Deceleration stop
0011 (0017)	Flash memory error (FLASH MEMORY ERR)	Data was not saved in the flash memory. Save the data in the flash memory again. The error can be cleared when the data is written normally. Replace the MC Unit if the error persists.	Deceleration stop
0012 (0018)	EEPROM error (EEPROM ERR)	Data could not be written to the EEPROM, where the error log is stored. Perform an error reset, and then continuously operate the MC Unit. If the error recurs, replace the MC Unit.	Deceleration stop

12-4 Task Error Codes

When a task error occurs, the Error Flag and the Task Error Flag turn ON in the PLC Interface Area, and a 4-digit error code is output in hexadecimal to word n+11 (for the MC221) or word n+19 (for the MC421). The following table shows the address of the Error Flags and the Task Error Flags for both the MC221 and the MC421.

Error name	Task	MC221	MC421
Error Flag	---	n+10, bit 14	n+18, bit 14
Task Error Flag	Task 1	n+15, bit 00	n+23, bit 00
	Task 2	n+19, bit 00	n+27, bit 00
	Task 3	---	n+31, bit 00
	Task 4	---	n+35, bit 00

The meanings of the error codes are explained in the following tables. The programs referred to here are MC programs written in G language.

Explanation of Tables

Under the *Code* heading, the 4-digit hexadecimal code that is output by the MC Unit is given first. The number given below it in parentheses is the way it appears when decimal display is selected at the Programming Console. Under the *Error name* heading, the actual error name is given first and the name as it appears in the CX-Motion and the Teaching Box is given below it in parentheses.

For details on the three stop methods, refer to *12-3 System Error Codes*.

Code	Error	Error Processing	Stop method
0014 (0020)	Program number error (PROGRAM No. ERR)	The specified program number is outside of the acceptable range. The position data specified with G72 is not between 500 and 999. Specify a 4-digit hexadecimal number from 0000 to 03E7 (0000 to 0999 in decimal). Set the position data specified with G72 between 500 and 999.	Deceleration stop
0015 (0021)	Program not found (NO PROGRAM)	The specified main program or subroutine does not exist. If a SUBROUTINE JUMP (G72) command was executed, the specified subroutine does not exist. Create the specified program or check whether the specified program number is correct.	Deceleration stop
0016 (0022)	Program axis declaration error (AXIS SPEC ERR)	The axes used in the program are not set in the parameters. Be sure to set the axes being used in the parameters. This setting is made with the CX-Motion.	Deceleration stop
0017 (0023)	Illegal G code (INV G CODE COMND)	An unused G code was used in the program. Somehow the program has been destroyed. Download the program again and write it to the flash memory, and then turn the power OFF and ON. The program could have been destroyed by any of the following: The memory data might have been destroyed by noise. The PLC (MC Unit) might have been turned OFF while data was being written to the flash memory.	Deceleration stop
0018 (0024)	Program out of range (PROG RANGE OVER)	Attempted to execute the next block of the program, but no block existed. Somehow the program has been destroyed. Download the program again and write it to the flash memory, and then turn the power OFF and ON. The program could have been destroyed by any of the following: The memory data might have been destroyed by noise. The PLC (MC Unit) might have been turned OFF while data was being written to the flash memory.	Deceleration stop
0019 (0025)	M code out of range (M CODE RANGE OVR)	Attempted to output an M code from a position data address or register, but the content was not within the acceptable range for M codes (000 to 999). Make sure that the M code is from 000 to 999.	Deceleration stop
001A (0026)	Interpolation rate not set (INTER SP NOT SET)	The interpolation feed rate was not specified when an interpolation command (G01, G02, or G03) was executed, and the interpolation feed rate hadn't been specified since program execution was started. Specify the interpolation feed rate in the program.	Deceleration stop

Code	Error	Error Processing	Stop method
001B (0027)	Arc interpolation command value error (CIR ARC INT ERR)	A circular interpolation command (G02 or G03) was executed, but an arc cannot be drawn because of one of the following reasons. The arc angle was too small because the start point and end point were extremely close and the radius was too large. With radius specification, the start point and end point are the same or the radius is too short compared to the distance between the start point and end point. With center specification, the distance between the center and the start point or end point is zero. With center specification, the difference is too long between the radius of the center and the start point and the radius of the center and the end point. Correct the program or the position data.	Deceleration stop
001C (0028)	Circular arc plane error (CIR ARC PLNE ERR)	When either G02 or G03 (the circular interpolation commands) was executed, the circular interpolation plane was either not specified or incorrectly specified. When the circle center was specified, an axis was specified that was not part of the circular interpolation plane. When one of the commands from G17 to G22 was executed, it tried to specify a circular plane that included an axis not set for that task. Correct the program.	Deceleration stop
001D (0029)	Overflow error (OVERFLOW ERROR)	An overflow occurred when the axis command value was converted with the minimum setting value or pulse rate in a G00, G01, G02, G03, or G31 command. Correct the program or the position data. Check the setting for the minimum setting unit parameter in the system parameters.	Deceleration stop
001E (0030)	Divide-by-zero error (ZERO DIVIDE ERR)	A division by zero occurred when a G60 command (ARITHMETIC OPERATIONS) was executed. Correct the program or the position data. Check the setting for the minimum setting unit parameter in the system parameters.	Deceleration stop
001F (0031)	Position data out of range (POSIT DATA OVER)	The position data exceeded the acceptable range when a G60 command (ARITHMETIC OPERATIONS) was executed or the specified axis' origin was not established when a present position was substituted in a G63 command (SUBSTITUTION). If the error occurred in a G60 command, correct the program or position data. If the error occurred in a G63 command, correct the program or establish the location of the specified axis' origin by executing an origin search.	Deceleration stop
0020 (0032)	Register out of range (REGIST RANGE OVR)	The register contents exceeded the acceptable range when a G60 command (ARITHMETIC OPERATIONS) or a G63 command (SUBSTITUTION) was executed. Correct the program or the data.	Deceleration stop
0022 (0034)	Nesting error (NESTING ERROR)	There were six or more nesting levels when a G72 command (SUBROUTINE JUMP) was executed. Correct the program so that there are five or fewer nesting levels.	Deceleration stop
0023 (0035)	No return destination (NO RETURN DESTIN)	A subroutine's program number was read to start execution, so there was no return destination when the SUBROUTINE END command (G73) was executed. Always start the main program first and then call the subroutine from the main program.	Deceleration stop

Code	Error	Error Processing	Stop method
0024 (0036)	Program number not set (PROG No. NOT SET)	When the MC program was started from the ladder program, the Cycle Start Bit was turned ON without turning ON the Program Number Read Bit. Turn ON the Cycle Start Bit after turning ON the Program Number Read Bit. The Program Number Read Bit must be turned ON when the Cycle Start Bit is turned ON after using the CX-Motion to add, edit, or delete any MC programs in the task. In this case, the program will be executed from the first block.	Deceleration stop
0025 (0037)	Number out of range (NUM RANGE OVER)	A numerical value exceeded the acceptable range during execution of G04 (time value), G53 (offset value), G54 (preset value), G69 (parameter value), or G70 (number of loops) command. An overflow occurred when the offset value or preset value was converted with the minimum setting unit from the system parameters. Correct the program or the position data. Check the setting for the minimum setting unit parameter in the system parameters when the error occurs in a present position preset from the G53 or G54. The travel amount was 0 for an axis for which a stopover was specified when using a version-1 MC Unit.	Deceleration stop
0026 (0038)	Negative interpolation rate (INTER SP – DESIG)	A zero or negative value in a position data address or register was specified for the interpolation feed rate for linear interpolation, circular interpolation, or interrupt inching. Correct the program or the position data so that a positive value is used for the interpolation feed rate.	Deceleration stop
0027 (0039)	Illegal intermediate code (INTER CODE ERROR)	Somehow the program has been destroyed. Download the program again and write it to the flash memory, and then turn the power OFF and ON. The intermediate code error could have been caused by any of the following: The memory data might have been destroyed by noise. The PLC (MC Unit) might have been turned OFF while data was being written to the flash memory.	Deceleration stop
0028 (0040)	Operating time overflow (RUN TIME OVERRUN)	Attempted to execute a G00, G01, G02, or G03 positioning command, but the movement to the specified target would take too long at the specified feed rate. Correct the program, position data, or parameters to increase the feed rate or reduce the distance to be moved.	Deceleration stop
0029 (0041)	Position counter overflow (MOVE DIST OVER)	Can't move to the target specified in a G01 command because it is too far. Correct the program or position data to reduce the distance to be moved.	Deceleration stop
002A (0042)	Position counter overflow during arc movement (CIR ARC DIST OVER)	Can't move the amount specified in a circular interpolation command because it is too far. Either the distance between the center and start/end point is too great, the arc length is too great, or the distance between the start and end points is too great. Correct the program or data to reduce the distance to be moved.	Deceleration stop
002B (0043)	Arc cannot be completed (CIR ARC CONT ERR)	Attempted to continue circular interpolation, but couldn't because an axis error occurred during circular interpolation, the circular interpolation was decelerated to a stop and then another positioning operation such as jogging was performed, or the circular interpolation was decelerated to a stop and then an axis error occurred. When this error occurs, circular interpolation cannot be continued, so restart the program from the beginning. Circular interpolation can be continued when the interpolation is decelerated to a stop and no errors or other positioning operations occur while the interpolation is stopped.	Deceleration stop

Code	Error	Error Processing	Stop method
002C (0044)	Supplemental axis speed overrun (SUP AXIS SP OVER)	The interpolation feed rate for the supplemental axis specified for circular interpolation exceeded the maximum interpolation feed rate specified in the system parameters. The traverse feed rate specified by G32 exceeded the maximum interpolation feed rate specified in the system parameters. Correct the program and position data so that the interpolation feed rate will be decreased. Correct the system parameters so that the maximum interpolation feed rate will be increased. Decrease the axis speed using G32.	Deceleration stop
002D (0045)	Second speed over (SECOND SP OVER)	The value of speed reference 2 was the same as or larger than the value of speed reference 1 when G30 was executed. Set so that the value of speed reference 1 is larger than the value of speed reference 2.	Deceleration stop
002E (0046)	No interrupt input (NO INPUT)	There was no interrupt input signal when G31 was executed. The interrupt input signal line may be disconnected, the sensor may not be working, or the input signal timing may be OFF. Perform an inspection and apply the appropriate remedy, and then execute G31 again.	Deceleration stop
002F (0047)	Position reverse (POSITION REVERSE)	When G31 was executed, the direction of travel with no interrupt input did not match the direction of travel with an interrupt input. (The travel directions were reversed.) Correct the program so that the travel directions in both of these cases are the same.	Deceleration stop
0030 (0048)	Negative number of rotations (ROTAT–DESIG)	The number of rotations designated by G02 or G03 is a negative number. With G32, one of the following errors may have occurred: The feed rate was set to zero or less (including negative numbers). A negative number was designated as the number of end windings. The total number of windings was set to zero or less (including negative numbers). Correct the program so that the number of rotations for G02 or G03 will be greater than zero. Correct the parameters as follows: • Rotation speed: Greater than zero • Number of end windings: Zero or more • Total number of windings: One or more	Deceleration stop
0031 (0049)	Traverse axis setting error (WIND SET ERR)	The rotating axis specified by G32 (X axis or Z axis) was not set for unlimited feeding. With the CX-Motion, set the X axis or the Z axis for unlimited feeding.	Deceleration stop
0032 (0050)	D code range overrun (D CODE RANGE OVER)	When an attempt was made to output a D code with a position data address or register designation, the specified data exceeded the D code range. Set the D code to a number between 0 and 255.	Deceleration stop

Code	Error	Error Processing	Stop method
0033 (0051)	Traverse continuation error (WIND CONT ERR)	An attempt was made to continue a traverse operation, but the operation was unable to be continued for one of the following reasons: • An error occurred at the axis during the traverse operation. • The axis was decelerated to a stop during traverse operations, or jogging was executed while axis operation was stopped, or the axis was moved by some other such operation. In this case it will not be possible to continue, so restart the program execution from the first block. The traverse operation can be continued only under the following conditions: • The traverse operation must have been stopped by a deceleration stop and there must have been no errors generated while operation was stopped; or the axis must not be able to be moved.	Deceleration stop
0034 (0052)	D code timeout (D CODE TIME OVR)	The CPU Unit was notified of the D code, but there was no response from the CPU Unit. The CPU Unit ladder program may be stopped, or another ladder program with a higher priority may be running. Check the CPU Unit and the ladder program.	Deceleration stop

12-5 Axis Error Codes

When a system error occurs, the Error Flag turns ON in the PLC Interface Area and an error code is output. With the MC221, bit 14 of word n+10 turns ON, and a 4-digit error code is output in hexadecimal to word n+11. With the MC421, bit 14 of word n+18 turns ON, and a 4-digit error code is output in hexadecimal to word n+19. The meanings of the error codes are explained in the error code tables provided on the following pages.

Explanation of Tables

Under the *Code* heading, the 4-digit hexadecimal code that is output by the MC Unit is given first. The number given below it in parentheses is the way it appears when decimal display is selected at the Programming Console. Under the *Error name* heading, the actual error name is given first and the name as it appears at the Teaching Box is given below it in parentheses.

For details on the three stop methods, refer to *12-3 System Error Codes*.

Code	Error	Error processing	Stop method
003C (0060)	Driver alarm encountered (DRV ALARM INPUT)	The driver alarm input was turned ON or an attempt was made to operate the axis or execute a Present position CHANGE (G54) command or ORIGIN UNDEFINED (G29) command with the driver alarm input ON after resetting an error. Check the status of the Servo Driver and correct the error if one is found. Turn the Servo Driver ON if it's OFF.	Emergency stop
003D (0061)	Error counter overflow (ERR CNT OVERFLOW)	The number of pulses in the error counter exceeded the upper limit. The upper limit will differ depending on the ON/OFF status of the Error Counter Selection Bit. OFF: The upper limit will be the error counter warning value set in the system parameters. ON: The upper limit will be 65,535 pulses. This error could be caused by a disconnected/broken encoder cable, electrical noise, improperly adjusted servo system, or improperly adjusted/faulty mechanical system.	Emergency stop

Code	Error	Error processing	Stop method
003E (0062)	Clockwise overtravel (CW OVER TRAVEL)	The CW limit input signal came ON during axis operation or an attempt was made to operate the axis with the CW limit input signal ON after resetting an error. Move the axis in the CCW direction with manual operation.	Accumulated pulse stop or emergency stop (Set in the system parameters.)
003F (0063)	Counterclockwise overtravel (CCW OVER TRAVEL)	The CCW limit input signal came ON during axis operation or an attempt was made to operate the axis with the CCW limit input signal ON after resetting an error. Move the axis in the CW direction with manual operation.	Accumulated pulse stop or emergency stop (Set in the system parameters.)
0040 (0064)	Both direction overtravel (CW, CCW OVER TR)	Both limit input signals came ON during axis operation or an attempt was made to operate the axis with both limit input signals ON after resetting an error. Check whether the limit input signals have been wired incorrectly.	Accumulated pulse stop or emergency stop (Set in the system parameters.)
0041 (0065)	No origin signal (NO ORIGIN SIGNAL)	During an origin search, the origin proximity input signal went from ON to OFF, but then a limit input signal went ON before the phase-Z input. This error could be caused by a fault phase-Z input in the encoder, a disconnected or broken encoder cable, or placement the origin proximity input signal too close to a limit input signal. Refer to *Appendix F Additional Origin Search Patterns* for details on how errors occur during origin searches.	Deceleration stop
0042 (0066)	No origin proximity signal (NO ORIG PROX SIG)	A limit input signal went ON before the origin proximity input signal during a one direction-mode origin search. There was no origin proximity input signal between the two limit input signals when origin search was executed in the reverse-mode origin search. Check the installation of the origin proximity input signal and the wiring of the limit input signals. Also check the location of the axes when the origin search was started. Refer to *Appendix B Additional Origin Search Patterns* for details on how errors occur during origin searches.	Deceleration stop

Code	Error	Error processing	Stop method
0043 (0067)	Clockwise software limit (CW SOFT LIM OVR)	The command value exceeded the CW software limit in an axis operation, the absolute position exceeded the CW software limit when an absolute encoder's position was read, the command value exceeded the CW software limit in a G53 or G54 command, or the command value exceeded the CW software limit when the present position preset was executed from the CPU Unit. Check whether the software limit in the system parameters is appropriate. (An error might occur if circular interpolation is performed very close to the software limit.) Increase the software limits if they aren't appropriate. If they are appropriate, correct the program, position data, or command value from the CPU Unit.	Deceleration stop or accumulated pulse (When error is detected before start of operation: Deceleration stop When error is detected after start of operation: Accumulated pulse)
0044 (0068)	Counterclockwise software limit (CCW SFT LIM OVR)	The command value exceeded the CCW software limit in an axis operation, the absolute position exceeded the CCW software limit when an absolute encoder's position was read, the command value exceeded the CCW software limit in a G53 or G54 command, or the command value exceeded the CCW software limit when the present position preset was executed from the CPU Unit. Check whether the software limit in the system parameters is appropriate. (An error might occur if circular interpolation is performed very close to the software limit.) Increase the software limits if they aren't appropriate. If they are appropriate, correct the program, position data, or command value from the CPU Unit.	
0045 (0069)	Origin not established (ORIG NOT ESTABLI)	Attempted to execute an axis movement command even though the location of the origin hadn't been established. When using an incremental encoder, perform an origin search. When using an absolute encoder, perform a servo lock and establish the origin. If the servo lock is already ON, perform a servo unlock operation and then perform a servo-lock operation.	Deceleration stop
0046 (0070)	Servo lock error (SERVO LOCK ERROR)	Attempted to execute a G-code command or manual command, but the axis was not in servo lock status. Lock the servo.	Deceleration stop
0047 (0071)	PV preset error (PV PRESET ERROR)	The preset value was out-of-range when a present position preset command was received from the CPU Unit. Correct the preset value so that it will be within the acceptable range.	Deceleration stop
0048 (0072)	Emergency stop input (STOP INPUT)	The emergency stop input came ON or an attempt was made to operate the axis with the emergency stop input ON after resetting an error. Clear the emergency stop input.	Accumulated pulse stop or emergency stop (Set in the system parameters.)

Code	Error	Error processing	Stop method
0049 (0073)	Absolute encoder error (ABS I/F ERR)	No absolute value data was sent from the Absolute Encoder. Communications error occurred while receiving data. Servo Driver parameter setting error The MC Unit parameters were set incorrectly. Possible causes are as follows: Encoder cable was disconnected or broken. Communications are faulty due to noise. Encoder is faulty. MC Unit is faulty. Servo Driver parameters are incorrect. Check the encoder cable and try again. Remove any possible causes of noise. The parameters might be incorrectly set for an incremental encoder. Change to the following settings. U-series Servo Driver Cn-01 bit 1 = 0 Cn-01 bit E = 1 W-series Servo Driver Pn002 digit number 2 = 0 G-series Servo Driver Pn0B = 0 or 2 If the same error occurs again, either the encoder or MC Unit is faulty. Replace the encoder or MC Unit. The model of Servo Driver and the ABS/INC parameter setting in the MC Unit do not match. When using a U-series or W-series Servo Driver, set the ABS/INC parameter to 1 (absolute encoder for U or W Series. When using a G-series Servo Driver, set the ABS/INC parameter to 2 (absolute encoder for G Series). **Note:** A Motion Control Unit with unit version 1.1 or later is required to use the absolute encoder functionality of the OMNUC G Series.	Deceleration stop
004A (0074)	Absolute data error (ABS DATA ERROR)	Absolute value data was properly (without any communications error) sent from the absolute encoder, but the data was illegal. Possible causes are as follows: Encoder cable was disconnected or broken. Communications are faulty due to noise. Encoder is faulty. MC Unit is faulty. Servo Driver parameters are incorrect. Check the encoder cable and try again. Use the following settings if an OMRON U-series Servo Driver set for an incremental encoder is being used: Cn-01 bit 1 = 0 Cn-01 bit E = 1 Cn-02 bit 1 = 0 Remove any possible causes of noise. If the same error occurs again, either the encoder or MC Unit is faulty. Replace the encoder or MC Unit.	Deceleration stop
004D (0077)	Present position counter overflow (PRESPOS CNT OVER)	An overflow (2,147,483,647 pulses) occurred in the present position counter. This error could be caused by a faulty encoder, a disconnected/broken encoder cable, the axis moving beyond the counter's range, or electrical noise. Try executing the command again after correcting the problem.	Accumulated pulse

Code	Error	Error processing	Stop method
004E (0078)	Absolute rotation counter error (ABS ROTA CNT ERR)	An attempt was made to set the present position from the absolute encoder, but the present position couldn't be defined due to the following reasons: Rotation of the absolute encoder was beyond ±99999. Rotation of the absolute encoder was within ±99998, but the value with the correction value added exceeded the counter value. If the driver setup has not been completed yet, complete the setup and try again. If the driver setup has already been completed, shift the axis to decrease the rotation of the absolute encoder and try again.	Deceleration stop
004F (0079)	Absolute encoder error (ABS ERR)	Power was not supplied to the absolute encoder or the absolute encoder was faulty. Connect a battery to the absolute encoder. If the battery has already been connected, the absolute encoder may be faulty. Replace the absolute encoder.	Deceleration stop
0052 (0082)	Origin proximity and overtravel simultaneously ON (OR PRX AND OT ON)	During an origin search, the origin proximity input signal and the limit input signal in the direction of the search were both ON at the same time. Change the mounting positions of the origin proximity input signal and limit input signal. Refer to *Appendix F Additional Origin Search Patterns* for details on how errors occur during origin searches.	Deceleration stop
0053 (0083)	Overtravel always ON (OVER TRAVEL ON)	The limit input signal in the direction of the search was already ON when a one direction-mode origin search was executed. Check the limit input signal in the initial origin search direction. Also check the location of the axis when the origin search was started. Refer to *Appendix F Additional Origin Search Patterns* for details on how errors occur during origin searches.	Deceleration stop
0054 (0084)	Origin proximity reverse error (OR PRX REVROT ER)	The reverse-mode origin search cannot be performed because the limit input signal in the direction of the search came ON while the search was reversing because of the origin proximity input. This is the same as when the origin proximity input is also used as a limit input signal. Check the limit input signal in the initial origin search direction as well as the mounting positions of the origin proximity input signal and limit input signal. Refer to *12. Reverse-mode Origin Searches, Number 12* in *Appendix F* for details on this error.	Deceleration stop
0055 (0085)	Overtravel reverse error (OT REV ROTAT ERR)	The reverse-mode origin search cannot be performed because the other limit input signal or the origin proximity input signal came ON while the search was reversing because of a limit input signal input. Check the limit input signal in the initial origin search direction as well as the mounting positions of the origin proximity input signal and limit input signal. Refer to *12. Reverse-mode Origin Searches, Number 12* in *Appendix F* for details on this error.	Deceleration stop
0056 (0086)	Wiring error (WIRING ERROR)	A wiring error was detected during the wiring check automatically performed with the servo locked. Check whether the number of pulses and check time in the wiring check are correct. If they are correct, check whether the encoder's phase-A/phase-B wiring is correct. Refer to page 132 *Wiring Check*.	Emergency stop

Code	Error	Error processing	Stop method
0057 (0087)	MPG ratio overflow (MPG FACTOR OVER)	The MPG's ratio (factor) is too great, so the command value cannot occur. Reduce the MPG ratio or the frequency of the pulses from the MPG. (Turn the MPG a little slower.)	Deceleration stop
0058 (0088)	Feedback pulse error (FEEDBK PULSE ERR)	The feedback pulses exceeded 625,000 pps or a task error occurred while the absolute encoder's data was being read and the read was cancelled. The encoder dividing ratio set in the Servo Driver parameters is wrong. When using the U Series, check the setting of Cn-0A. When using the W Series, check the setting of Pn201. When using the G Series, check the setting of Pn44 and set Pn45 to 0. The excessive feedback pulse frequency could be caused by a broken encoder cable, encoder error, or noise. Take appropriate countermeasures and try again. Remove the causes that have caused the task error.	Emergency stop

12-6 Error Log

Important errors detected at the MC Unit are saved in non-volatile memory. These records can be accessed during maintenance and inspection to see what kinds of errors have been occurring, and how often. The error log can be read using the CX-Motion.

The following table shows the kinds of errors that are saved in the error log.

Error code (hex)	Error	Processing
0001	PLC watchdog timer error	Follow the instructions in the applicable PLC manual.
0002	PLC service monitor error	May be caused by the following: An end refresh prohibition is set by the CPU Unit. The CPU Unit scan time is too short. Take the following countermeasures: Clear the end refresh prohibition. Lengthen the CPU Unit scan time.
0006	Other CPU Unit error	Make adjustments at the CPU Unit.
000E	CPU bus error	Check whether the MC Unit is securely mounted to the Backplane. If the error persists, the CPU Unit or the Backplane may be defective. Replace the CPU Unit or the Backplane.
000F	PLC initialization processing error	May be caused by the following: The unit number is not correctly set. The unit number is allocated to another Special I/O Unit. Set the unit number correctly and power up again.
0015	Fatal PLC error	Follow the instructions in the applicable PLC manual.
0016	Non-fatal PLC error	Follow the instructions in the applicable PLC manual.
0108	Routing error	These errors do not normally occur. If they do occur, contact an OMRON representative.
010d	Routing error	
010e	Routing error	
0118	Illegal packet error	
0124	Routing error	
0602	Memory corruption	An error has occurred at the flash memory or EEPROM. If this error occurs frequently, replace the MC Unit.
0310	System parameter corruption	Refer to the system error code 0001 hex.
0311	Program corruption	Refer to the system error code 0003 hex.

Error code (hex)	Error	Processing
0312	Illegal G command	Refer to the task error code 0017 hex.
0313	Program range over	Refer to the task error code 0018 hex.
0314	No origin	Refer to the task error code 0041 hex.
0315	Error counter overflow	Refer to the axis error code 003D hex.
0316	Absolute data error	Refer to the axis error code 004A hex.
0317	No origin proximity signal	Refer to the axis error code 0042 hex.
0318	CW overtravel	Refer to the axis error code 003E hex.
0319	CWW overtravel	Refer to the axis error code 003F hex.
031a	Bi-directional overtravel	Refer to the axis error code 0040 hex.
031b	Present position counter overflow	Refer to the axis error code 004D hex.
031c	Absolute multi-turn error	Refer to the axis error code 004E hex.
031d	Feedback pulse error	Refer to the axis error code 0058 hex.

SECTION 13
Maintenance and Inspection

This section explains the maintenance and inspection procedures that must be followed to keep the MC Unit operating in optimum condition. It includes instructions on the proper procedure to follow when replacing an MC Unit, and precautions to observe when replacing a Servomotor.

13-1 Routine Inspections 550
13-1-1 Handling Precautions 551
13-1-2 Procedure for Replacing an MC Unit 551
13-1-3 Precautions When Replacing a Servomotor 552

13-1 Routine Inspections

In order for your MC Unit to continue operating at optimum condition, periodic inspections are necessary. The main components of the Unit are semiconductors and have a long service life, but depending on the operating environment, there may be more or less deterioration of these and other parts. A standard inspection schedule is once every six months to one year. More frequent inspections may be advisable depending on the operating environment. Maintain the inspection schedule once it has been set.

Inspection Points

Check to be sure that the power supply, ambient temperature, humidity, and other specifications are within the specifications. Be sure that these are no loose screws and that all battery and cable connections are secure. Clean any dust or dirt that has accumulated.

Item	Inspection points	Criteria	Remarks
I/O Power Supply	Measure the voltage variations at the I/O power supply terminal block. Do they meet the standards?	24 VDC: 20.4 to 26.4 VDC	With a voltage tester, check between the terminals and make sure that the power supply falls within the acceptable range.
Environment conditions	Is the ambient temperature within the acceptable range? (When used in a panel, the ambient temperature inside the panel must be checked.)	0 to 55°C	With a thermometer, check the ambient temperature inside the panel and make sure that it falls within the acceptable range.
	Is the ambient humidity within the acceptable range? (When used in a panel, the ambient humidity inside the panel must be checked.)	10% to 90% RH (with no condensation)	With a hygrometer, check the ambient humidity inside the panel and make sure that it falls within the acceptable range.
	Is the Unit exposed to direct sunlight?	It must not be exposed to direct sunlight.	Shield the Unit from direct sunlight.
	Is there any accumulation of dust (especially iron dust) or salts?	There must be none of these present.	Remove any accumulation of dust (especially iron dust) or salts and protect against them.
	Is the Unit exposed to any spray of water, oil, or chemicals?	It must not be exposed to any of these.	Protect the Unit from water, oil, and chemicals.
	Is the location subject to corrosive or flammable gases?	The Unit must not be exposed to these.	Check for smells or use a gas sensor.
	Is the location subject to shock or vibration?	The amount of shock or vibration must be within the acceptable ranges given in the specifications.	Install a cushion or other device to reduce shock and vibration.
	Is the location near any source of noise?	There must be no noise.	Remove the Unit from the noise source or apply countermeasures.

Item	Inspection points	Criteria	Remarks
Installation and wiring	Is the MC Unit securely mounted?	There must be no looseness.	With a Phillips screwdriver, tighten all mounting screws.
	Are the cable connectors properly inserted and locked?		Carefully insert and lock all cable connectors.
	Are there any loose screws in the external wiring?		With a Phillips screwdriver, tighten all screws in the external wiring.
	Are any crimp terminals for external wiring too close together?	There must be sufficient distance between them.	Do a visual check and separate the terminals as required.
	Are any external cables disconnected?	There must be no external abnormalities.	Do a visual check and connect or replace cables as required.

Required Tools

The following tools, materials, and equipment are required when performing an inspection.

Phillips screwdriver
Voltage tester or digital voltage meter
Industrial alcohol and a clean cotton cloth
Synchroscope
Oscilloscope
Thermometer
Hydrometer

13-1-1 Handling Precautions

- Turn OFF the power before replacing the Unit.
- If a Unit is found to be faulty and is replaced, check the new Unit again to ensure there are no errors.
- When returning a faulty Unit for repair, make a detailed record of the Unit's malfunction and take it together with the Unit to your nearest OMRON office or sales representative.
- If a contact is not good, put some industrial alcohol on a clean cotton cloth and wipe the surface. After doing this, install the Unit.
- Before restarting operation, transfer the required programs, position data, and system parameters to the MC Unit that was changed, and save them to the flash memory.

13-1-2 Procedure for Replacing an MC Unit

Use the following procedure when it is necessary to replace an MC Unit.

1,2,3...

1. Make a note of the unit number of the MC Unit to be replaced.
2. To retain the status and settings of the MC Unit that is to be replaced, use CX-Motion to upload the programs, position data, and system parameters.
3. Turn OFF the power supply.
4. To facilitate rewiring, carefully label the cables that are to be disconnected. This is important, because the MC Unit has a number of connecting cables from the Servo Driver, and unexpected operation may result if they are incorrectly connected to the replacement Unit.
5. Replace the MC Unit, and reconnect the wiring as before.
6. Set the unit number for the MC Unit.
7. Turn ON the power supply to the PLC.
8. Clear all the programs in the MC Unit.

9. Download only the parameters to the MC Unit, and save them all in flash memory.
10. Turn the PLC power OFF and back ON to start up the MC Unit with the new parameters.
11. Download all of the programs and position data to the MC Unit, and save them all in flash memory.

With this, the replacement of the MC Unit will be complete.

13-1-3 Precautions When Replacing a Servomotor

Adjusting the Origin

The origin search finds the mechanical origin with the encoder phase-Z position as the reference. The phase-Z position will be changed when the Servomotor is replaced, so make preparations in advance by marking the mechanical origin, and so on, so that the mechanical origin can be adjusted to the same position after the replacement. To adjust the mechanical origin, adjust the reference origin offset value (in the machine parameters) used in the origin search.

Absolute Position Setting Parameter

When an absolute Servomotor is replaced, the absolute encoder's absolute position for the origin will be changed and positioning will not be possible for files with the previous system parameters. When replacing an absolute Servomotor, therefore, use the following procedure to reset the absolute position parameters for each parameter file.

1,2,3...

1. Download the pre-replacement parameters.
2. Write the parameters to the flash memory.
3. Reset the power supply.
4. Move the machine to the origin position. (Refer to *SECTION 9 Establishing the Origin*.)
5. Set the absolute origin. (Refer to *SECTION 9 Establishing the Origin*.)
6. Upload the parameters and save the file.
7. If other system parameter files are also to be used, repeat the above procedure for those parameters as well.

Appendix A
Performance

MC Unit Processing Flow

The main system software processes in the MC Unit and the time required for them are shown in the following diagram. (The CS1W-MC221 supports only axes X and Y, and tasks 1 and 2.)

As shown, the processing times depend on the number of tasks, on whether a Teaching Box is connected, on zone settings, etc. Details on individual processes are given on the following pages.

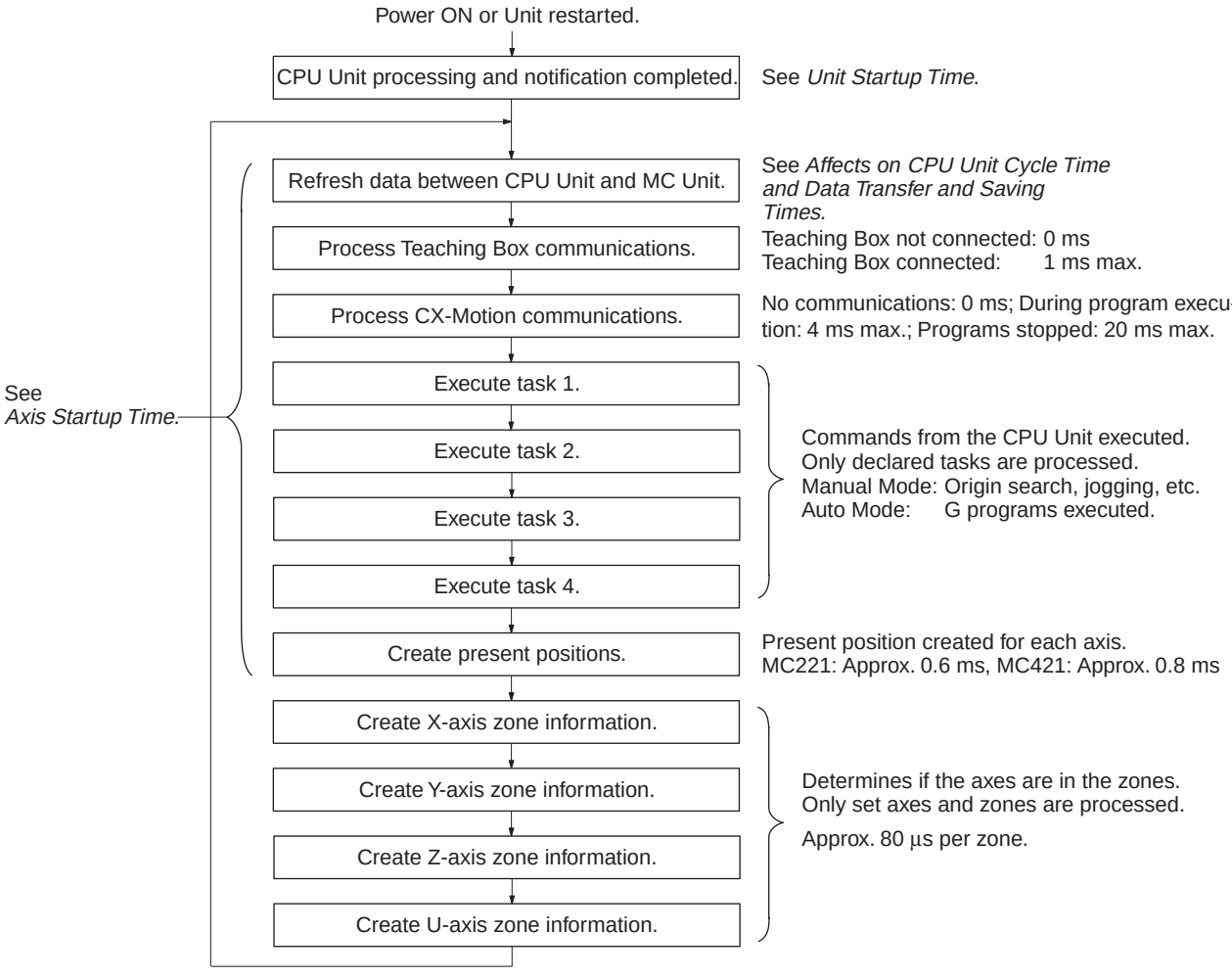

Unit Startup Time

When the MC Unit is turned ON or reset, it performs initialization processing and then turns ON the Manual Mode Flag. The MC Unit can receive commands from the CPU Unit only after the Manual Mode Flag has turned ON. Approximately 600 ms is required for the Manual Mode Flag to be turned ON.

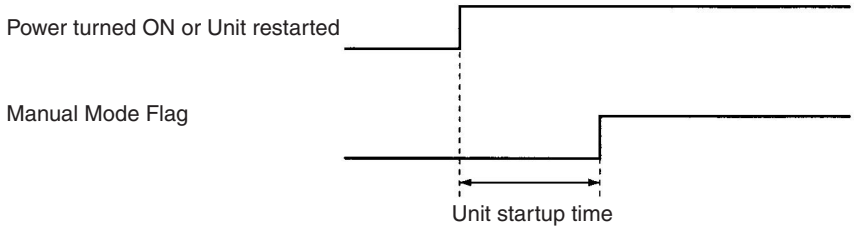

Affects on CPU Unit Cycle Time

The cycle time of the CPU Unit will be increased by the following time for each MC Unit mounted in the PLC. The time will be longer when the motors are moving than when the servos are unlocked.

Model	CS1W-MC221	CS1W-MC421
Time increase per Unit	0.2 to 0.8 ms	0.25 to 0.85 ms

The cycle time will also be increased if the IOWR or IORD instructions are used to read/write position data or parameters in the MC Unit. The following tables shows the increase in the cycle time when position data for 1 to 4 positions is read or written.

Instruction	CS1W-MC221	CS1W-MC421
IOWR (per instruction)	0.4 to 0.7 ms	0.4 to 0.7 ms
IORD (per instruction)	0.4 to 0.8 ms	0.4 to 0.8 ms

Data Transfer and Saving Times

Large volumes of data can be written to or read from the command area using the IOWR instructions. Refer to *SECTION 4 Data Transfer and Storage* for details on using the command area to transfer data.

The data read/write times are listed in the following tables.

Up to 20 words can be transferred per CPU Unit cycle. Longer CPU Unit cycle times will thus increase the data transfer time.

Conditions: All axes are servo-locked and stopped.
The CPU Unit cycle time is 2 ms.

Data Read Times (Command: 17D7 Hex)

Number of words read	CS1W-MC221	CS1W-MC421
3 words (1 position)	37 ms	37 ms
30 words (10 positions)	37 ms	45 ms
300 words (100 positions)	60 ms	77 ms
1,500 words (500 positions)	205 ms	245 ms
3,000 words (1,000 positions)	390 ms	470 ms

Data Write Times (Command: 17D6 Hex)

Number of words read	CS1W-MC221	CS1W-MC421
3 words (1 position)	37 ms	37 ms
30 words (10 positions)	37 ms	45 ms
300 words (100 positions)	60 ms	77 ms

Number of words read	CS1W-MC221	CS1W-MC421
1,500 words (500 positions)	213 ms	253 ms
3,000 words (1,000 positions)	400 ms	475 ms

Data Save Times (Commands: 17D4 Hex, 17D5 Hex)

The average data save time is 3 s, but up to 33 s can be required. If more than 33 s is required, a flash memory error will occur and the data save operation will be canceled.

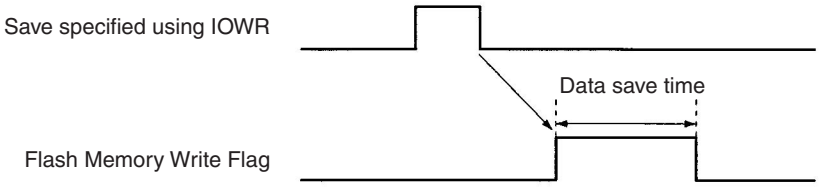

Axis Startup Time

The time required from when a movement command from the CPU Unit is recognized until an analog voltage is output depends on the tasks being used and the G code. The axis startup times are shown in the following table.

CS1W-MC221

Command	Conditions	1 task, 2 axes		2 tasks, 2 axes
Cycle Start Bit ON Response Time (See note 1.)	All axes stopped.	X-axis operation (See note 2.)	X, Y-axis operation (See note 3.)	X-axis operation
G00: PTP CONTROL		5.2 to 8.0 ms	5.1 to 8.2 ms	4.6 to 9.0 ms
G01: LINEAR INTERPOLATION		4.7 to 7.2 ms	5.7 to 9.3 ms	5.3 to 8.2 ms
G02/G03: CIRCULAR INTERPOLATION		---	5.7 to 8.3 ms	---
G30: SPEED CONTROL		5.2 to 8.0 ms	5.1 to 8.2 ms	4.6 to 9.0 ms
G31: INTERRUPT FEED		4.7 to 6.7 ms	5.1 to 8.2 ms	4.5 to 7.2 ms
G32: TRAVERSE		---	5.6 to 9.1 ms	---
When changing override	All axes stopped.	3.8 to 7.3 ms	3.1 to 7.2 ms	4.6 to 8.2 ms
Option response time (See note 4.)	All axes stopped.	2.5 to 4.5 ms		
Jogging	All axes stopped.	3.4 to 7.0 ms	4.3 to 8.0 ms	5.2 to 7.2 ms

Note 1. The Cycle Start Bit ON Response Time is the time from when the Cycle Start Bit turns ON until an analog voltage is output for the next block, e.g., block N010 in the following code.

N000 Pxxx xxxx
N010 <*G code for above*>

2. The response times for an X-axis operation are for when only 1 axis is moved without being affected by the task configuration, e.g., as in G00 X100 or G01 X100 F100.
3. The response times for an X, Y-axis operation are for when all axes are moved, e.g., as in G00 X100 Y100 or G01 X100 Y100 Z100 U100 F100.

4. The option response time is the time from when a general-purpose input turns ON until an analog voltage is output, e.g., as in N010 G01 X100 F1000 #16, where "#16" is option input 16 and corresponds to general-purpose input 1.

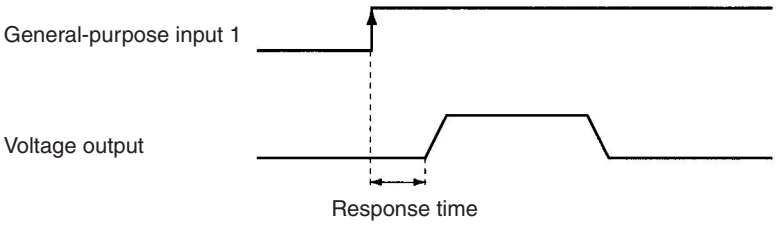

CS1W-MC421

Command	Conditions	1 task, 2 axes		2 tasks, 2 axes
Cycle Start Bit ON Response Time (See note 1.)	All axes stopped.	X-axis operation (See note 2.)	X, Y-axis operation (See note 3.)	X-axis operation
G00: PTP CONTROL		7.0 to 11.0 ms	8.1 to 11.5 ms	9.3 to 12.3 ms
G01: LINEAR INTERPOLATION		7.6 to 10.4 ms	8.8 to 11.7 ms	6.6 to 11.1 ms
G02/G03: CIRCULAR INTERPOLATION		---	8.5 to 11.2 ms (See note 4.)	---
G30: SPEED CONTROL		7.0 to 11.0 ms	8.1 to 11.5 ms	9.3 to 12.3 ms
G31: INTERRUPT FEED		7.1 to 9.9 ms	8.1 to 11.2 ms	6.3 to 9.5 ms
G32: TRAVERSE		---	8.5 to 11.2 ms (See note 5.)	---
When changing override	All axes stopped.	3.6 to 11.1 ms	3.6 to 11.5 ms	4.6 to 12.3 ms
Option response time (See note 6.)	All axes stopped.	2.5 to 4.5 ms		
Jogging	All axes stopped.	5.0 to 11.1 ms	4.8 to 11.0 ms	6.8 to 11.4 ms

Other Response Times

Command	Response time
Origin search and origin return	Same as for jogging
Forced block end, pause, deceleration stop, error counter reset, M code reset for M500 to M999	Same as for changing override
M code reset for M0 to M499	Same as for Cycle Start Bit ON

1. The Cycle Start Bit ON Response Time is the time from when the Cycle Start Bit turns ON until an analog voltage is output for the next block, e.g., block N010 in the following code.

   N000 Pxxx xxxx
   N010 <*G code for above*>

2. The response times for an X-axis operation are for when only 1 axis is moved without being affected by the task configuration, e.g., as in G00 X100 or G01 X100 F100.
3. The response times for an X, Y-axis operation are for when all axes are moved, e.g., as in G00 X100 Y100 or G01 X100 Y100 Z100 U100 F100.
4. The response time for an X, Y circular interpolation.
5. The response time for an X, Y traverse operation.

6. The option response time is the time from when a general-purpose input turns ON until an analog voltage is output, e.g., as in N010 G01 X100 F1000 #16, where "#16" is option input 16 and corresponds to general-purpose input 1.

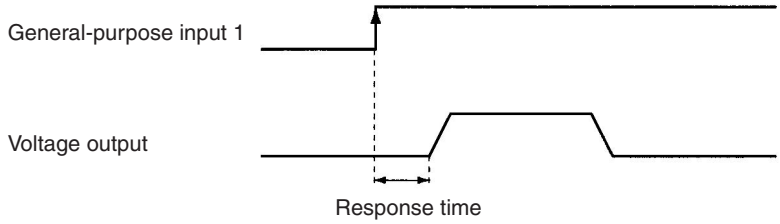

Analog Voltage Output Delays

Controlling Two or Four Axes in One Task

The delays in outputting analog voltages for linear interpolation in one task are shown below. (The CS1W-MC221 supports only the X and Y axes.)

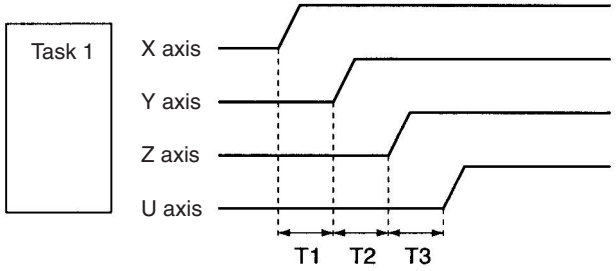

Time	Two-axis linear interpolation with MC221	Four-axis linear interpolation with MC421
T1	30 to 150 μs	30 to 210 μs
T2	---	30 to 210 μs
T3	---	30 to 210 μs

Controlling One Axis in Each Task

The delays in outputting analog voltages for linear interpolation in separate tasks are shown below. (The CS1W-MC221 supports only tasks 1 and 2, and the X and Y axes.)

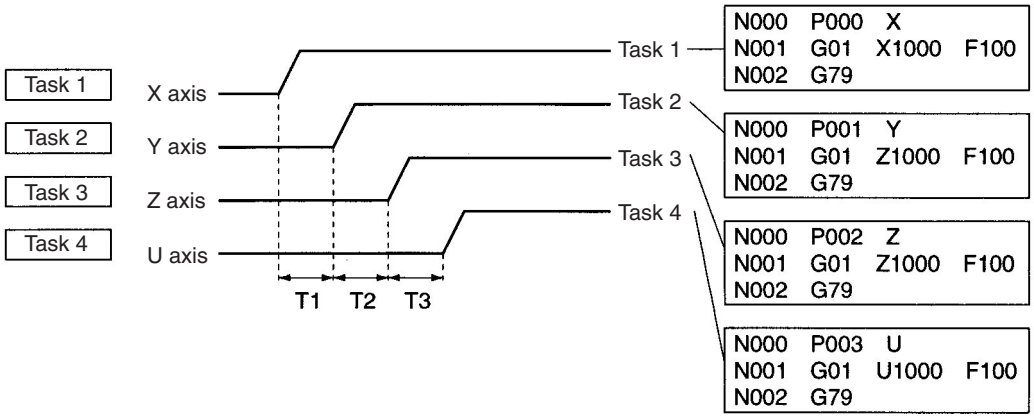

Time	MC221	MC421
T1	2 to 4.3 ms	3 to 4.3 ms
T2	---	3 to 4.3 ms
T3	---	3 to 4.3 ms

The above times assume that the CPU Unit cycle time is 2 ms, that the Teaching Box is not connected, and that all tasks are started simultaneously.

Interrupt Notification Time

The time required for the MC Unit to send an interrupt to the CPU Unit using a D code is given below for the following command line. The interrupt is sent to the CPU Unit after positioning has been completed.

G01 X1000 D100

Only CS Special I/O Units mounted in PLC: 0.25 to 2.25 ms

CS and C200H Special I/O Units mounted in PLC: 1.25 to 3.25 ms

Note If the CPU Unit is already processing an interrupt when the MC Unit attempts to send an interrupt, the MC Unit will wait up to 10 ms. If the interrupt is still not accepted, the MC Unit will generate a D code timeout error.

G Code Interpretation Time

The time required to interpret a G code command line that does not require movement is shown in the following table.

	MC221	MC421
Pass Mode	1.5 to 2.0 ms	2.0 to 4.2 ms
Stop Mode or In-position Check OFF Mode	2.4 to 3.3 ms	3.8 to 6.9 ms

Minimum Operation Time in Pass Mode

The minimum operation time in Pass Mode is given in the following table.

Operation	MC221	MC421
Linear interpolation	8.5 ms	9.5 ms
Circular interpolation	10.0 ms	15.0 ms

In Pass Mode, the travel distance and demand speed may make the operation time too short to complete the internal calculations required for positioning. If this occurs, Stop Mode operation will be used. To ensure that the Pass Mode operation is performed, adjust the demand speed and demand position to provide the minimum pass time.

Operation Time ≥ Minimum Operation Time

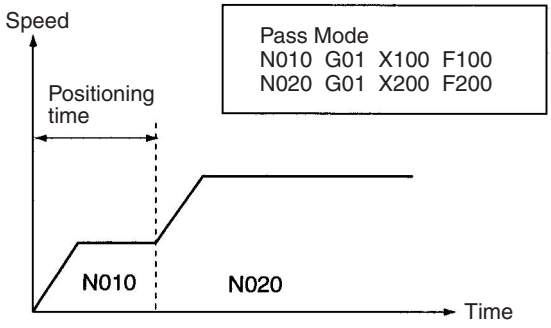

Positioning Time < Minimum Operation Time

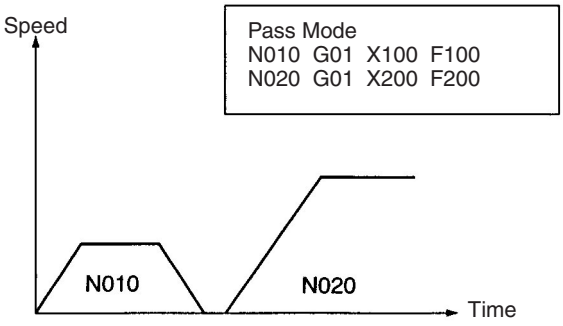

Minimum Operation Time in In-position Check OFF Mode

In In-position Check OFF Mode, the next positioning operation is performed after output to the reference value for the deceleration curve without waiting for an in-position check to be performed. If the operation time is shorter than the minimum operation time, however, Stop Mode operation will be used in the same way as it is in Pass Mode. The minimum operation time in In-position Check OFF Mode is the same as it is in Pass Mode.

Operation Time ≥ Minimum Operation Time

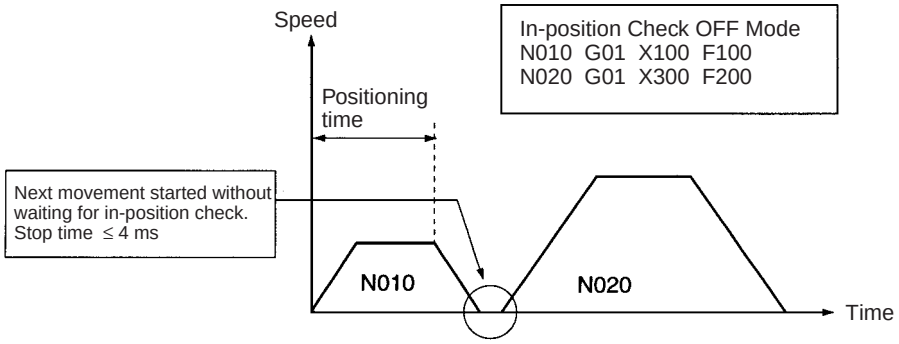

Positioning Time < Minimum Operation Time

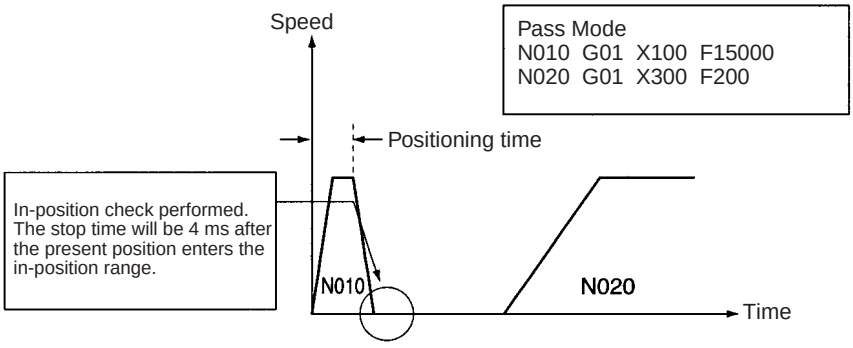

Minimum Traverse Reversal Time

The minimum reversal time for traverse operation is 2 ms.

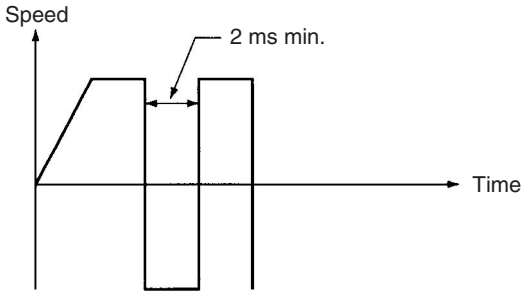

External Interrupt Response Time

The times required from reception of interrupt inputs to the start of the corresponding functions are given in the following table. A minimum signal width of 2 ms is required.

- The time given for the emergency stop and CW/CCW limit input signals is the time required until deceleration to stop the motor is begun.
- The time given for the origin proximity input signal is the time required until deceleration of the origin search operation is begun.
- The time given for general-purpose inputs is the time required to start fixed length feeding using the input signal.

Input	MC221	MC421
Emergency stop input signal	2.5 to 4.5 ms	2.5 to 4.5 ms
CW/CCW limit input signals	2.5 to 4.5 ms	2.5 to 4.5 ms
Origin proximity input signal	2.5 to 4.5 ms	2.5 to 4.5 ms
General-purpose input signal	2.5 to 4.5 ms	2.5 to 4.5 ms

Other

The times required for the MC Unit to transfer M codes, present positions, and Zone Flag status to the CPU Unit are given in the following table. The time will increase if more tasks are used or if circular interpolation, traverse operations, or linear interpolation is being performed.

Data	MC221	MC421
M code (without zones)	5 to 14 ms	6.6 to 34 ms
Present positions (without zones)	5 to 14 ms	6.6 to 34 ms
Zone Flags	(5 to 14 ms) + (0.08 ms x number of zones)	(6.6 to 34 ms) + (0.08 ms x number of zones)

The above times assume that the CPU Unit cycle time is 2 ms and that the Teaching Box is not connected.

Appendix B
G-language Codes

Code	Name	Function
G00	POSITIONING	Positions up to 2 or 4 axes simultaneously with PTP control at the maximum feed rate.
G01	LINEAR INTERPOLATION	Performs linear interpolation on up to 2 or 4 axes simultaneously at the specified interpolation feed rate.
G02	CIRCULAR INTERPOLATION (CLOCKWISE)	Performs 2-axis circular interpolation in the clockwise direction at the specified interpolation feed rate.
G03	CIRCULAR INTERPOLATION (COUNTERCLOCKWISE)	Performs 2-axis circular interpolation in the counterclockwise direction at the specified interpolation feed rate.
G04	DWELL TIMER	Waits for the specified length of time.
G10	PASS MODE	Performs operations one-by-one in sequence without waiting for deceleration to stop.
G11	STOP MODE	Performs the next operation after completing positioning.
G13	IN-POSITION CHECK OFF MODE	Starts the next operation without waiting for positioning to be completed.
G17	CIRCULAR PLANE SPECIFICATION (X-Y)	Sets the X-Y plane as the plane for circular interpolation.
G18 (See note.)	CIRCULAR PLANE SPECIFICATION (X-Z)	Sets the X-Z plane as the plane for circular interpolation.
G19 (See note.)	CIRCULAR PLANE SPECIFICATION (Y-Z)	Sets the Y-Z plane as the plane for circular interpolation.
G20 (See note.)	CIRCULAR PLANE SPECIFICATION (X-U)	Sets the X-U plane as the plane for circular interpolation.
G21 (See note.)	CIRCULAR PLANE SPECIFICATION (Y-U)	Sets the Y-U plane as the plane for circular interpolation.
G22 (See note.)	CIRCULAR PLANE SPECIFICATION (Z-U)	Sets the Z-U plane as the plane for circular interpolation.
G26	REFERENCE ORIGIN RETURN	Moves to the reference origin.
G27	WORKPIECE ORIGIN RETURN	Moves to the workpiece origin.
G28	ORIGIN SEARCH	Performs an origin search on the specified axis.
G29	ORIGIN UNDEFINED	Sets the origin to an undefined state.
G30	SPEED CONTROL	Feeds up to 2 or 4 axes simultaneously at the controlled feed rate.
G31	INTERRUPT FEEDING	Performs an interrupt feeding operation.
G32	TRAVERSE	Executes traverse operation.
G50	SELECT REFERENCE COORDINATE SYSTEM	Specifies the reference coordinate system.
G51	SELECT WORKPIECE COORDINATE SYSTEM	Specifies the workpiece coordinate system.
G53	CHANGE WORKPIECE ORIGIN OFFSET	Changes the origin of the workpiece coordinate system.
G54	CHANGE REFERENCE COORDINATE SYSTEM PV	Changes the present value in the reference coordinate system.
G60	ARITHMETIC OPERATIONS	Performs arithmetic operations on numerical values, position data, and registers.
G63	SUBSTITUTION	Substitutes numerical values, position data, or registers into other position data or registers.
G69	CHANGE SYSTEM PARAMETER	Changes the specified parameter.
G70	UNCONDITIONAL JUMP	Unconditionally jumps to the specified block.
G71	CONDITIONAL JUMP	Jumps to the specified block when the condition is met.

Code	Name	Function
G72	SUBROUTINE JUMP	Calls the specified subroutine.
G73	SUBROUTINE END	Ends the subroutine.
G74	OPTIONAL END	Ends the block currently being executed when the specified optional input is ON.
G75	OPTIONAL SKIP	Skips the block after this command when the specified optional input is ON.
G76	OPTIONAL PROGRAM STOP	Pauses the program when the specified optional input is ON.
G79	PROGRAM END	Ends the main program.
G90	ABSOLUTE SPECIFICATION	Positions with absolute coordinates when performing axis operations.
G91	INCREMENTAL SPECIFICATION	Positions with relative coordinates when performing axis operations.

Note The CS2W-MC221 MC Unit does not have this command.

Appendix C
PLC Interface Area Lists

CS1W-MC221CS1W-MC421

CS1W-MC221 PLC Interface Area Outputs (CPU Unit to MC Unit) n = CIO 2000 + 10 x unit number (words)

Word	Contents	Bit	Description			Page
n	System Controls	00	General Output 1/Brake Output X	1	Output port turned ON.	261
				0	Output port turned OFF.	
		01	General Output 2/Brake Output Y	1	Output port turned ON.	261
				0	Output port turned OFF.	
		02	General Output 3	1	Output port turned ON.	261
				0	Output port turned OFF.	
		03	General Output 4	1	Output port turned ON.	261
				0	Output port turned OFF.	
		04	Not used.			---
		05	Autoloading Error Reset Bit	↑	Reset an autoloading error.	262
		06	Not used.			---
		07	Error Counter Function Selection Bit	1	Error counter warning	263
				0	Error counter error detection	
		08 to 13	Not used.			---
		14	Error Reset Bit	↑	Resets an error.	265
		15	Not used.			---

CS1W-MC221 PLC Interface Area Outputs (CPU Unit to MC Unit) n = CIO 2000 + 10 x unit number (words)

Word	Contents	Bit	Description			Page
n+1	Controls Common to All Tasks	00	Optional Input 0	1	Optional Input 0 turned ON.	265
				0	Optional Input 0 turned OFF.	
		01	Optional Input 1	1	Optional Input 1 turned ON.	265
				0	Optional Input 2 turned OFF.	
		02	Optional Input 2	1	Optional Input 2 turned ON.	265
				0	Optional Input 2 turned OFF.	
		03	Optional Input 3	1	Optional Input 3 turned ON.	265
				0	Optional Input 3 turned OFF.	
		04	Optional Input 4	1	Optional Input 4 turned ON.	265
				0	Optional Input 4 turned OFF.	
		05	Optional Input 5	1	Optional Input 5 turned ON.	265
				0	Optional Input 5 turned OFF.	
		06	Optional Input 6	1	Optional Input 6 turned ON.	265
				0	Optional Input 6 turned OFF.	
		07	Optional Input 7	1	Optional Input 7 turned ON.	265
				0	Optional Input 7 turned OFF.	
		08	Optional Input 8	1	Optional Input 8 turned ON.	265
				0	Optional Input 8 turned OFF.	
		09	Optional Input 9	1	Optional Input 9 turned ON.	265
				0	Optional Input 9 turned OFF.	
		10	Optional Input 10	1	Optional Input 10 turned ON.	265
				0	Optional Input 10 turned OFF.	
		11	Optional Input 11	1	Optional Input 11 turned ON.	265
				0	Optional Input 11 turned OFF.	
		12	Optional Input 12	1	Optional Input 12 turned ON.	265
				0	Optional Input 12 turned OFF.	
		13	Optional Input 13	1	Optional Input 13 turned ON.	265
				0	Optional Input 13 turned OFF.	
		14	Optional Input 14	1	Optional Input 14 turned ON.	265
				0	Optional Input 14 turned OFF.	
		15	Optional Input 15	1	Optional Input 15 turned ON.	265
				0	Optional Input 15 turned OFF.	

CS1W-MC221 PLC Interface Area Outputs (CPU Unit to MC Unit) n = CIO 2000 + 10 x unit number (words)

Word	Contents	Bit	Description			Page
n+2	Control Bits for Task 1	00 to 15	Task 1 program number 0000 to 03E7 (4-digit Hex) (Decimal: 0000 to 0999) 0 | $x16^2$ | $x16^1$ | $x16^0$ Specifies the program number executed in Automatic Mode. If the Program Number Read Bit is ON, the program number will be read when the Cycle Start Bit is turned ON and the specified program will be executed from the beginning.			266
n+3		00	Not used.			---
		01	Automatic/Manual Mode	↑	Any axes operating in Manual Mode will decelerate to a stop.	267
				1	Automatic Mode	
				↓	When the MC program is being executed, it will be stopped and any operating axes will decelerate to a stop.	
				0	Manual Mode	
		02	Cycle Start Bit	↑	Starts MC program execution.	268
				1	Continues MC program execution.	
				0	Stops MC program execution.	
		03	Single Block	1	Executes one block.	272
		04	Forced Block End	↑	Forces an end to the block.	273
				1	Prohibits cycle start.	
		05	Pause	↑	Pauses execution.	274
				1	Prohibits cycle start.	
		06	M Code Reset Bit	↑	Resets the M code.	275
				1	M code reset standby. (Prohibits M code output.) Maintains status.	
				↓	Clears standby status and starts executing the next command.	
		07	Program Number Read Bit	1	Reads the program number.	275
		08	Not used.			---
		09	Teaching Bit	↑	Starts teaching.	277
		10	Teaching Type Bit	1	Present position (feedback value)	278
				0	Target position	
		11 to 15	Not used.			---

CS1W-MC221 PLC Interface Area Outputs (CPU Unit to MC Unit) n = CIO 2000 + 10 x unit number (words)

Word	Contents	Bit	Description			Page
n+4	Control Bits for Task 2	00 to 15	Task 2 program number 0000 to 03E7 (4-digit Hex) (Decimal: 0000 to 0999) 0 | $x10^2$ | $x10^1$ | $x10^0$ Specifies the program number executed in Automatic Mode. If the Program Number Read Bit is ON, the program number will be read when the Cycle Start Bit is turned ON and the specified program will be executed from the beginning.			266
n+5		00	Not used.			---
		01	Automatic/Manual Mode	↑	Any axes operating in Manual Mode will decelerate to a stop.	267
				1	Automatic Mode	
				↓	When the MC program is being executed, it will be stopped and any operating axes will decelerate to a stop.	
				0	Manual Mode	
		02	Cycle Start Bit	↑	Starts MC program execution.	268
				1	Continues MC program execution.	
				0	Stops MC program execution.	
		03	Single Block	1	Executes one block.	272
		04	Forced Block End	↑	Forces an end to the block.	273
				1	Prohibits cycle start.	
		05	Pause	↑	Pauses execution.	274
				1	Prohibits cycle start.	
		06	M Code Reset Bit	↑	Resets the M code.	275
				1	M code reset standby. (Prohibits M code output.) Maintains status.	
				↓	Clears standby and starts executing the next command.	
		07	Program Number Read Bit	1	Reads the program number.	277
		08	Not used.			---
		09	Teaching Bit	↑	Starts teaching.	277
		10	Teaching Type Bit	1	Present position (feedback value)	278
				0	Target position	
		11 to 15	Not used.			---
n+6	X-axis Control Bits	00 to 15 (Manual/ Auto)	X-axis override 0001 to 07CF (4-digit Hex) (Decimal: 0001 to 1999) Decimal: 0001 to 1999 → 0.1% to 199.9% (0.1% increments) $x16^3$ | $x16^2$ | $x16^1$ | $x16^0$ Specifies the override for axis operations. This override value is used while the override setting is enabled.			279

CS1W-MC221 PLC Interface Area Outputs (CPU Unit to MC Unit) n = CIO 2000 + 10 x unit number (words)

Word	Contents	Bit	Description			Page
n+7	X-axis Control Bits	00 (Manual)	Deceleration Stop	↑	Deceleration Stop	280
				1	Prohibits other manual commands.	
		01 (Manual)	Origin Search	↑	Starts the origin search.	281
				1	Continues the origin search.	
				↓	Stops the origin search.	
		02 (Manual)	Reference Origin Return	↑	Starts moving the axis to the reference origin.	282
				1	Continues movement.	
				↓	Stops movement.	
		03 (Manual)	Jogging	↑	Starts jog operation.	283
				1	Continues jog operation.	
				↓	Stops jog operation.	
		04 (Manual/ Auto)	Error Counter Reset	↑	Starts error counter reset.	284
				1	Prohibits MC program execution.	
				↓	Continues MC program execution.	
				0	All functions can be used.	
		05 (Manual)	Forced Origin	↑	Set the present position as the origin.	290
		06 (Manual)	Absolute Origin Set	↑	Sets the origin for the absolute encoder.	291
		07 (Manual)	Not used.			---
		08 (Manual)	Enable MPG/Sync Encoder	↑	Starts MPG/sync encoder operation.	292
				1	Continues MPG/sync encoder operation.	
				↓	Stops MPG/sync encoder operation.	
		09 (Manual)	Servo-lock	↑	Locks the servo.	293
		10 (Manual/ Auto)	Servo-unlock	↑	Clears the servo lock. (Enables normal reception.)	296
		11 (Manual/ Auto)	Driver Alarm Reset	1	Turns ON the driver alarm reset output.	298
				0	Turns OFF the driver alarm reset output.	
		12 (Manual/ Auto)	Override Setting	1	Enables the override setting.	299
				0	Disables the override setting.	
		13 (Manual)	Jog direction	1	Specifies negative direction for jogging.	300
				0	Specifies positive direction for jogging.	
		14 (Manual)	MPG/Sync Encoder Ratio Specifier 1	15 14 0 0 0 1 1 0 1 1	Sets MPG/sync encoder ratio (1) Sets MPG/sync encoder ratio (2) Sets MPG/sync encoder ratio (3) Sets MPG/sync encoder ratio (4)	301
		15 (Manual)	MPG/Sync Encoder Ratio Specifier 2			301

CS1W-MC221 PLC Interface Area Outputs (CPU Unit to MC Unit) n = CIO 2000 + 10 x unit number (words)

Word	Contents	Bit	Description	Page
n+8	Y-axis Control Bits	00 to 15 (Manual/ Auto)	Y-axis override 0001 to 07CF (4-digit Hex) (Decimal: 0001 to 1999) Decimal: 0001 to 1999 → 0.1% to 199.9% (0.1% increments) $x16^3$ | $x16^2$ | $x16^1$ | $x16^0$ Specifies the override for axis operations. This override value is used while the override setting is enabled.	279

CS1W-MC221 PLC Interface Area Outputs (CPU Unit to MC Unit) n = CIO 2000 + 10 x unit number (words)

Word	Contents	Bit	Description			Page
n+9	Y-axis Control Bits	00 (Manual)	Deceleration Stop	↑	Deceleration Stop	280
				1	Prohibits other manual commands.	
		01 (Manual)	Origin Search	↑	Starts the origin search.	281
				1	Continues the origin search.	
				↓	Stops the origin search.	
		02 (Manual)	Reference Origin Return	↑	Starts moving the axis to the reference origin.	282
				1	Continues movement.	
				↓	Stops movement.	
		03 (Manual)	Jogging	↑	Starts jog operation.	283
				1	Continues jog operation.	
				↓	Stops jog operation.	
		04 (Manual/ Auto)	Error Counter Reset	↑	Starts error counter reset.	284
				1	Prohibits MC program execution.	
				↓	Continues MC program execution.	
				0	All functions can be used.	
		05 (Manual)	Forced Origin	↑	Set the present position as the origin.	290
		06 (Manual)	Absolute Origin Set	↑	Executes ABS Initialization.	291
		07	Not used.			---
		08 (Manual)	Enable MPG/Sync Encoder	↑	Starts MPG/sync encoder operation.	292
				1	Continues MPG/sync encoder operation.	
				↓	Stops MPG/sync encoder operation.	
		09 (Manual)	Servo-lock	↑	Locks the servo.	293
		10 (Manual/ Auto)	Servo-unlock	↑	Clears the servo lock. (Enables normal reception.)	296
		11 (Manual/ Auto)	Driver Alarm Reset	1	Turns ON the driver alarm reset output.	298
				0	Turns OFF the driver alarm reset output.	
		12 (Manual/ Auto)	Override Setting	1	Enables the override setting.	299
				0	Disables the override setting.	
		13 (Manual)	Jog direction	1	Specifies negative direction for jogging.	300
				0	Specifies positive direction for jogging.	
		14 (Manual)	MPG Sync Encoder Ratio Specifier 1	15 14 0 0 0 1 1 0 1 1	Sets MPG/sync encoder ratio (1) Sets MPG/sync encoder ratio (2) Sets MPG/sync encoder ratio (3) Sets MPG/sync encoder ratio (4)	301
		15 (Manual)	MPG Sync Encoder Ratio Specifier 2			301

CS1W-MC221 PLC Interface Area Inputs (MC Unit to CPU Unit) n = CIO 2000 + 10 x unit number (words)

<table>
<tr><th>Word</th><th>Contents</th><th>Bit</th><th colspan="4">Description</th><th>Page</th></tr>
<tr><td>n+10</td><td>System Status</td><td>00 to 03</td><td colspan="4">Error Type Data
<table>
<tr><th colspan="4">Bits</th><th>Error</th><th>Remarks</th></tr>
<tr><th>03</th><th>02</th><th>01</th><th>00</th><th></th><th></th></tr>
<tr><td>0</td><td>0</td><td>0</td><td>0</td><td>Normal</td><td>Error Flag will be OFF.</td></tr>
<tr><td>0</td><td>0</td><td>0</td><td>1</td><td>System error</td><td rowspan="10">Error Flag will turn ON too.</td></tr>
<tr><td>0</td><td>0</td><td>1</td><td>0</td><td>Task 1 error</td></tr>
<tr><td>0</td><td>0</td><td>1</td><td>1</td><td>Task 2 error</td></tr>
<tr><td>0</td><td>1</td><td>0</td><td>0</td><td>Not used.</td></tr>
<tr><td>0</td><td>1</td><td>0</td><td>1</td><td>Not used.</td></tr>
<tr><td>0</td><td>1</td><td>1</td><td>0</td><td>X-axis error</td></tr>
<tr><td>0</td><td>1</td><td>1</td><td>1</td><td>Y-axis error</td></tr>
<tr><td>1</td><td>0</td><td>0</td><td>0</td><td>Not used.</td></tr>
<tr><td>1</td><td>0</td><td>0</td><td>1</td><td>Not used.</td></tr>
</table>
When an error occurs, an error output indicating the error type will be turned ON and will remain valid until the error is corrected.</td><td>301</td></tr>
<tr><td></td><td></td><td>04</td><td>Autoloading</td><td>1</td><td>Autoloading started.</td><td>302</td></tr>
<tr><td></td><td></td><td></td><td></td><td>↓</td><td>Autoloading ended.</td><td></td></tr>
<tr><td></td><td></td><td>05</td><td>Autoloading Error</td><td>1</td><td>An error occurred during autoloading.</td><td>303</td></tr>
<tr><td></td><td></td><td></td><td></td><td>↓</td><td>Autoloading Error Reset has been turned from ON.</td><td></td></tr>
<tr><td></td><td></td><td>06</td><td>Data Transmission</td><td>1</td><td>Data is being transmitted.</td><td>304</td></tr>
<tr><td></td><td></td><td></td><td></td><td>↓</td><td>Data transmission has been completed.</td><td></td></tr>
<tr><td></td><td></td><td>07</td><td>Data Transmission Error</td><td>1</td><td>An error occurred during data transmission.</td><td>304</td></tr>
<tr><td></td><td></td><td></td><td></td><td>↓</td><td>Data has been retransmitted normally.</td><td></td></tr>
<tr><td></td><td></td><td>08</td><td>Data Reception</td><td>1</td><td>Data is being received.</td><td>304</td></tr>
<tr><td></td><td></td><td></td><td></td><td>↓</td><td>Data reception has been completed.</td><td></td></tr>
<tr><td></td><td></td><td>09</td><td>Data Reception Error</td><td>1</td><td>An error occurred during data reception.</td><td>305</td></tr>
<tr><td></td><td></td><td></td><td></td><td>↓</td><td>Resent data has been received normally.</td><td></td></tr>
<tr><td></td><td></td><td>10</td><td>Flash Memory Write</td><td>1</td><td>Data is being written to the flash memory.</td><td>305</td></tr>
<tr><td></td><td></td><td></td><td></td><td>↓</td><td>Data transmission to the flash memory has been completed.</td><td></td></tr>
<tr><td></td><td></td><td>11</td><td>Teaching Box in Enable Mode</td><td>1</td><td>The Teaching Box is in enable mode.</td><td>306</td></tr>
<tr><td></td><td></td><td></td><td></td><td>0</td><td>The Teaching Box is not in enable mode.</td><td></td></tr>
<tr><td></td><td></td><td>12</td><td>Teaching Box in Protect Mode</td><td>1</td><td>The Teaching Box is in protect mode.</td><td>306</td></tr>
<tr><td></td><td></td><td></td><td></td><td>0</td><td>The Teaching Box is not in protect mode.</td><td></td></tr>
<tr><td></td><td></td><td>13</td><td colspan="3">Not used.</td><td>---</td></tr>
<tr><td></td><td></td><td>14</td><td>Error Flag</td><td>1</td><td>An error has occurred.</td><td>308</td></tr>
<tr><td></td><td></td><td></td><td></td><td>↓</td><td>Error Reset is ON.</td><td></td></tr>
<tr><td></td><td></td><td></td><td></td><td>0</td><td>No error has occurred.</td><td></td></tr>
<tr><td></td><td></td><td>15</td><td>Autoloading Time Up</td><td>1</td><td>Communications not possible even after waiting for the monitoring time period set in the system parameters.</td><td>308</td></tr>
<tr><td></td><td></td><td></td><td></td><td>↓</td><td>Autoloading Error Reset has been turned from OFF to ON.</td><td></td></tr>
<tr><td>n+11</td><td></td><td>00 to 15</td><td colspan="4">Error code (4-digit Hex)
<table>
<tr><td>$x16^3$</td><td>$x16^2$</td><td>$x16^1$</td><td>$x16^0$</td></tr>
</table>
Normal: 0000
The above is the error code format of the MC Unit. An error code is valid while the Error Flag is ON. If an error occurs, check the error type data to find the type of error, such as a system, task 1, task 2, X-axis, or Y-axis error.</td><td>309</td></tr>
</table>

CS1W-MC221 PLC Interface Area Inputs (MC Unit to CPU Unit) n = CIO 2000 + 10 x unit number (words)

Word	Contents	Bit	Description			Page
n+12	Task 1 Status Flags	00 to 15	Task 1 M code 0000 to 03E7 (4-digit Hex) (Decimal: 0000 to 0999) 0 | $x16^2$ | $x16^1$ | $x16^0$ The M code is output, which is valid when the M strobe is turned ON.			309
n+13		00 to 15	Task 1 Executing program number 0000 to 03E7 (4-digit Hex) (Decimal: 0000 to 0999) 0 | $x16^2$ | $x16^1$ | $x16^0$ The program number of the program currently being executed or currently on standby for task 1 is output.			310
n+14		00 to 15	Task 1 Executing block number 0000 to 03E7 (4-digit Hex) (Decimal: 0000 to 0999) 0 | $x16^2$ | $x16^1$ | $x16^0$ The block number of the block currently being executed or currently on standby for task 1 is output.			310
n+15		00	Task Error Flag	1	A task error occurred.	310
				↓	Error Reset is ON.	
				0	Normal	
		01	Not used.			---
		02	Automatic Mode Flag	1	The Unit is in Automatic Mode.	310
				0	Mode other than the above	
		03	Manual Mode Flag	1	The Unit is in Manual Mode.	311
				0	Mode other than the above	
		04	Program Execution Flag	1	The MC program is being executed.	311
				0	Mode other than the above	
		05	Program Execution Completed Flag	1	MC program execution has been completed. (G79 was executed.)	312
				0	Mode other than the above	
		06	Optional Input Standby	1	Waiting for optional input	313
				0	Mode other than the above	
		07	M Code Reset Standby	1	Waiting for M code reset	313
				0	Mode other than the above	
		08	M Strobe	1	An M code (0 to 999) has been output.	314
				↓	M code reset	
		09	Cycle Start Received	1	The Cycle Start Signal was received.	315
				↓	The Cycle Start Signal is OFF.	
		10 to 12	Not used.			---
		13	Teaching Completed	1	Teaching has been completed.	316
				↓	Teaching command is OFF.	
		14	Teaching Error	1	A teaching error occurred.	316
				↓	OFF when the next teaching command has been completed normally or teaching address setting has been completed.	
		15	Teaching Address Over	1	The teaching address was too high.	317
				↓	OFF when the next teaching command has been completed normally or teaching address setting has been completed.	

CS1W-MC221 PLC Interface Area Inputs (MC Unit to CPU Unit) n = CIO 2000 + 10 x unit number (words)

Word	Contents	Bit	Description			Page
n+16	Task 2 Status Flags	00 to 15	Task 2 M code 0000 to 03E7 (4-digit Hex) (Decimal: 0000 to 0999) 0 | $x16^2$ | $x16^1$ | $x16^0$ The M code is output, which is valid when the M strobe is turned ON.			309
n+17		00 to 15	Task 2 Executing program number 0000 to 03E7 (4-digit Hex) (Decimal: 0000 to 0999) 0 | $x16^2$ | $x16^1$ | $x16^0$ The program number of the program currently being executed or currently on standby for task 2 is output.			310
n+18		00 to 15	Task 2 Executing block number 0000 to 03E7 (4-digit Hex) (Decimal: 0000 to 0999) 0 | $x16^2$ | $x16^1$ | $x16^0$ The block number of the block currently being executed or currently on standby for task 2 is output.			310
n+19		00	Task Error Flag	1	A task error occurred.	310
				↓	Error Reset is ON.	
				0	Normal	
		01	Not used.			---
		02	Automatic Mode Flag	1	The Unit is in Automatic Mode.	310
				0	Mode other than the above	
		03	Manual Mode Flag	1	The Unit is in Manual Mode.	311
				0	Mode other than the above	
		04	Program Execution Flag	1	The MC program is being executed.	311
				0	Mode other than the above	
		05	Program Execution Completed Flag	1	MC program execution has been completed. (G79 was executed.)	312
				0	Mode other than the above	
		06	Optional Input Standby	1	Waiting for optional input	313
				0	Mode other than the above	
		07	M Code Reset Standby	1	Waiting for M code reset	313
				0	Mode other than the above	
		08	M Strobe	1	An M code (0 to 999) has been output.	314
				↓	M code reset	
		09	Cycle Start Received	1	The Cycle Start Signal was received.	315
				↓	The Cycle Start Signal is OFF.	
		10 to 12	Not used.			---
		13	Teaching Completed	1	Teaching has been completed.	316
				↓	Teaching command is OFF.	
		14	Teaching Error	1	A teaching error occurred.	316
				↓	OFF when the next teaching command has been completed normally or teaching address setting has been completed.	
		15	Teaching Address Over	1	The teaching address was too high.	317
				↓	OFF when the next teaching command has been completed normally or teaching address setting has been completed.	

CS1W-MC221 PLC Interface Area Inputs (MC Unit to CPU Unit) n = CIO 2000 + 10 x unit number (words)

Word	Contents	Bit	Description			Page
n+20 n+21	X-axis Status Flags	00 to 15	X-axis present position (32-bit signed data) The present position of the reference coordinate system is output. The position of the decimal point is determined by the system parameter settings. 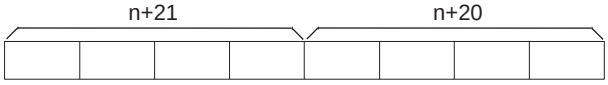 Present Position Range: FD9DA601 Hex to 026259FF Hex (–39999999 to 39999999) Example: The present position of –100 (FFFFFF9C Hex) is output as shown below. When the minimum setting unit for the X axis is 0.1 this value will be displayed as –10.0. 			318
n+22	X-axis Status Flags	00	Reference Origin	1	Within the in-position range of the reference origin	318
				0	Outside the in-position range of the reference origin	
		01	Busy Flag	1	A manual command is being executed.	319
				0	Other than the above	
		02	Servo-lock ON	1	Servo-lock status	320
				0	Servo-unlock status	
		03	No Origin Flag	1	No origin (Reference origin is not fixed.)	320
				0	The reference origin has been established.	
		04	Axis Operating	1	There is an axis movement command.	321
				0	There is no axis movement command.	
		05	Positioning Completed	1	Within the in-position range	322
				0	Outside the in-position range	
		06	Error Counter Warning	1	The number of accumulated pulses in the error counter exceeds the error counter warning value.	322
				0	Other than the above	
		07	Alarm Input	1	The driver alarm input is ON.	323
				0	The driver alarm input is OFF.	
		08	Zone 1 Flag	1	Within zone 1	323
				0	Outside of zone 1	
		09	Zone 2 Flag	1	Within zone 2	323
				0	Outside of zone 2	
		10	Zone 3 Flag	1	Within zone 3	323
				0	Outside of zone 3	
		11	Zone 4 Flag	1	Within zone 4	323
				0	Outside of zone 4	
		12	Zone 5 Flag	1	Within zone 5	323
				0	Outside of zone 5	
		13	Zone 6 Flag	1	Within zone 6	323
				0	Outside of zone 6	
		14	Zone 7 Flag	1	Within zone 7	323
				0	Outside of zone 7	
		15	Zone 8 Flag	1	Within zone 8	323
				0	Outside of zone 8	

CS1W-MC221 PLC Interface Area Inputs (MC Unit to CPU Unit) n = CIO 2000 + 10 x unit number (words)

Word	Contents	Bit	Description			Page
n+23 n+24	Y-axis Status Flags	00 to 15	Y-axis present position (32-bit signed data) The present position of the reference coordinate system is output. The position of the decimal point is determined by the system parameter settings. 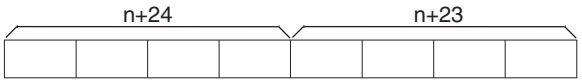 Present Position Range: FD9DA601 Hex to 026259FF Hex (–39999999 to 39999999) Example: The present position of –100 (FFFFFF9C) is output as shown below. When the minimum setting unit for the X axis is 0.1 this value will be displayed as –10.0. 			318
n+25		00	Reference Origin	1	Within the in-position range of the reference origin	318
				0	Outside the in-position range of the reference origin	
		01	Busy Flag	1	A manual command is being executed.	319
				0	Other than the above	
		02	Servo-lock ON	1	Servo-lock status	320
				0	Servo-unlock status	
		03	No Origin Flag	1	No origin (Reference origin is not fixed.)	320
				0	The reference origin has been established.	
		04	Axis Operating	1	There is an axis movement command.	321
				0	There isn't an axis movement command.	
		05	Positioning Completed	1	Within the in-position range	322
				0	Outside the in-position range	
		06	Error Counter Warning	1	The number of accumulated pulses in the error counter exceeds the error counter warning value.	322
				0	Other than the above	
		07	Alarm Input	1	The driver alarm input is ON.	323
				0	The driver alarm input is OFF.	
		08	Zone 1 Flag	1	Within zone 1	323
				0	Outside of zone 1	
		09	Zone 2 Flag	1	Within zone 2	323
				0	Outside of zone 2	
		10	Zone 3 Flag	1	Within zone 3	323
				0	Outside of zone 3	
		11	Zone 4 Flag	1	Within zone 4	323
				0	Outside of zone 4	
		12	Zone 5 Flag	1	Within zone 5	323
				0	Outside of zone 5	
		13	Zone 6 Flag	1	Within zone 6	323
				0	Outside of zone 6	
		14	Zone 7 Flag	1	Within zone 7	323
				0	Outside of zone 7	
		15	Zone 8 Flag	1	Within zone 8	323
				0	Outside of zone 8	

CS1W-MC221 PLC Interface Area Inputs (MC Unit to CPU Unit) n = CIO 2000 + 10 x unit number (words)

Word	Contents	Bit	Description	Page
n+26 to n+29	Reserved for the system.			---

CS1W-MC421 PLC Interface Area Outputs (CPU Unit to MC Unit) n = CIO 2000 + 10 x unit number (words)

Word	Contents	Bit	Description			Page
n	System Controls	00 (Manual/ Auto)	General Output 1/Brake Output X	1	Output port turned ON.	261
				0	Output port turned OFF.	
		01 (Manual/ Auto)	General Output 2/Brake Output Y	1	Output port turned ON.	261
				0	Output port turned OFF.	
		02 (Manual/ Auto)	General Output 3/Brake Output Z	1	Output port turned ON.	261
				0	Output port turned OFF.	
		03 (Manual/ Auto)	General Output 4/Brake Output U	1	Output port turned ON.	261
				0	Output port turned OFF.	
		04 (Manual/ Auto)	Not used.			---
		05 (Manual/ Auto)	Autoloading Error Reset Bit	↑	Resets an autoloading error.	262
		06	Not used.			---
		07 (Manual/ Auto)	Error Counter Function Selection Bit	1	Error counter warning	263
				0	Error counter error detection	
		08 to 13	Not used.			---
		14 (Manual/ Auto)	Error Reset Bit	↑	Resets an error.	265
		15 (Manual/ Auto)	Not used.			---

CS1W-MC421 PLC Interface Area Outputs (CPU Unit to MC Unit) n = CIO 2000 + 10 x unit number (words)

Word	Contents	Bit	Description			Page
n+1	Controls Common to All Tasks	00 (Manual/ Auto)	Optional Input 0	1	Optional Input 0 turned ON.	265
				0	Optional Input 0 turned OFF.	
		01 (Manual/ Auto)	Optional Input 1	1	Optional Input 1 turned ON.	265
				0	Optional Input 2 turned OFF.	
		02 (Manual/ Auto)	Optional Input 2	1	Optional Input 2 turned ON.	265
				0	Optional Input 2 turned OFF.	
		03 (Manual/ Auto)	Optional Input 3	1	Optional Input 3 turned ON.	265
				0	Optional Input 3 turned OFF.	
		04 (Manual/ Auto)	Optional Input 4	1	Optional Input 4 turned ON.	265
				0	Optional Input 4 turned OFF.	
		05 (Manual/ Auto)	Optional Input 5	1	Optional Input 5 turned ON.	265
				0	Optional Input 5 turned OFF.	
		06 (Manual/ Auto)	Optional Input 6	1	Optional Input 6 turned ON.	265
				0	Optional Input 6 turned OFF.	
		07 (Manual/ Auto)	Optional Input 7	1	Optional Input 7 turned ON.	265
				0	Optional Input 7 turned OFF.	
		08 (Manual/ Auto)	Optional Input 8	1	Optional Input 8 turned ON.	265
				0	Optional Input 8 turned OFF.	
		09 (Manual/ Auto)	Optional Input 9	1	Optional Input 9 turned ON.	265
				0	Optional Input 9 turned OFF.	
		10 (Manual/ Auto)	Optional Input 10	1	Optional Input 10 turned ON.	265
				0	Optional Input 10 turned OFF.	
		11 (Manual/ Auto)	Optional Input 11	1	Optional Input 11 turned ON.	265
				0	Optional Input 11 turned OFF.	
		12 (Manual/ Auto)	Optional Input 12	1	Optional Input 12 turned ON.	265
				0	Optional Input 12 turned OFF.	
		13 (Manual/ Auto)	Optional Input 13	1	Optional Input 13 turned ON.	265
				0	Optional Input 13 turned OFF.	
		14 (Manual/ Auto)	Optional Input 14	1	Optional Input 14 turned ON.	265
				0	Optional Input 14 turned OFF.	
		15 (Manual/ Auto)	Optional Input 15	1	Optional Input 15 turned ON.	265
				0	Optional Input 15 turned OFF.	

CS1W-MC421 PLC Interface Area Outputs (CPU Unit to MC Unit) n = CIO 2000 + 10 x unit number (words)

Word	Contents	Bit	Description			Page
n+2	Control Bits for Task 1	00 to 15 (Manual/ Auto)	Task 1 program number 0000 to 03E7 (4-digit hexadecimal) (Decimal: 0000 to 0999) 0 | $x16^2$ | $x16^1$ | $x16^0$ Specifies the program number executed in Automatic Mode. If the Program Number Read Bit is ON, the program number will be read when the Cycle Start Bit is turned ON and the specified program will be exected from the beginning.			266
n+3		00	Not used.			---
		01 (Manual/ Auto)	Automatic/Manual Mode	↑	Any axes operating in Manual Mode will decelerate to a stop.	267
				1	Automatic Mode	
				↓	If the MC program is being executed, it will be stopped and any operating axes will decelerate to a stop.	
				0	Manual Mode	
		02 (Manual/ Auto)	Cycle Start Bit	↑	Starts MC program execution.	268
				1	Continues MC program execution.	
				0	Stops MC program execution.	
		03 (Manual/ Auto)	Single Block	1	Executes one block.	272
		04 (Manual/ Auto)	Forced Block End	↑	Forces an end to the block.	273
				1	Prohibits cycle start.	
		05 (Manual/ Auto)	Pause	↑	Pauses execution.	274
				1	Prohibits cycle start.	
		06 (Manual/ Auto)	M Code Reset Bit	↑	Resets the M code.	275
				1	M code reset standby. (Prohibits M code output.) Maintains status.	
				↓	Clears standby and starts executing the next command.	
		07 (Manual/ Auto)	Program Number Read Bit	1	Reads the program number.	277
		08 (Manual/ Auto)	Not used.			---
		09 (Manual/ Auto)	Teaching Bit	↑	Starts teaching.	277
		10 (Manual/ Auto)	Teaching Type Bit	1	Present position (feedback value)	278
				0	Target position	
		11 to 15	Not used.			---
n+4	Control Bits for Task 2	00 to 15	Task 2 program number 0000 to 03E7 (4-digit hexadecimal) (Decimal: 0000 to 0999) Refer to Control Bits for Task 1 in n+2.			266
n+5		00 to 15	Control Bits for Task 2 Refer to Control Bits for Task 1 in n+3.			266

CS1W-MC421 PLC Interface Area Outputs (CPU Unit to MC Unit) n = CIO 2000 + 10 x unit number (words)

Word	Contents	Bit	Description	Page
n+6	Control Bits for Task 3	00 to 15	Task 3 program number 0000 to 03E7 (4-digit hexadecimal) (Decimal: 0000 to 0999) Refer to Control Bits for Task 1 in n+2.	266
n+7		00 to 15	Control Bits for Task 3 Refer to Control Bits for Task 1 in n+3.	266
n+8	Control Bits for Task 4	00 to 15	Task 4 program number 0000 to 03E7 (4-digit hexadecimal) (Decimal: 0000 to 0999) Refer to Control Bits for Task 1 in n+2.	266
n+9		00 to 15	Control Bits for Task 4 Refer to Control Bits for Task 1 in n+3.	266

CS1W-MC421 PLC Interface Area Outputs (CPU Unit to MC Unit) n = CIO 2000 + 10 x unit number (words)

Word	Contents	Bit	Description			Page
n+10	X-axis Control Bits	00 to 15 (Manual/ Auto)	X-axis override 0001 to 07CF (4-digit Hex) (Decimal: 0001 to 1999) Decimal: 0001 to 1999 → 0.1% to 199.9% (0.1% increments) x16 | $x16^2$ | $x16^1$ | $x16^0$ Specifies the override value for axis operation. This override value is used while the override setting is enabled.			279
n+11		00 (Manual/ Auto)	Deceleration Stop	↑	Deceleration Stop	280
				1	Prohibits other manual commands.	
		01 (Manual/ Auto)	Origin Search	↑	Starts the origin search.	281
				1	Continues the origin search.	
				↓	Stops the origin search.	
		02 (Manual/ Auto)	Reference Origin Return	↑	Starts moving the axis to the reference origin.	282
				1	Continues movement.	
				↓	Stops movement.	
		03 (Manual/ Auto)	Jogging	↑	Starts jog operation.	283
				1	Continues jog operation.	
				↓	Stops jog operation.	
		04 (Manual/ Auto)	Error Counter Reset	↑	Starts error counter reset.	284
				1	Prohibits MC program execution.	
				↓	Continues MC program execution.	
				0	All functions can be used.	
		05 (Manual/ Auto)	Forced Origin	↑	Set the present position as the origin.	290
		06 (Manual/ Auto)	ABS Origin Set	↑	Sets the origin for the absolute encoder.	292
		07	Not used.			---
		08 (Manual/ Auto)	Enable MPG/Sync Encoder	↑	Starts MPG/sync encoder operation.	292
				1	Continues MPG/sync encoder operation.	
				↓	Stops MPG/sync encoder operation.	
		09 (Manual/ Auto)	Servo-lock	↑	Starts servo lock.	293
		10 (Manual/ Auto)	Servo-unlock	↑	Clears the servo lock. (Enables normal reception.)	296
		11 (Manual/ Auto)	Driver Alarm Reset	1	Turns ON the driver alarm reset output.	298
				0	Turns OFF the driver alarm reset output.	
		12 (Manual/ Auto)	Override Setting	1	Enables the override setting.	299
				0	Disables the override setting.	
		13 (Manual/ Auto)	Jog direction	1	Specifies negative direction for jogging.	300
				0	Specifies positive direction for jogging.	
		14 (Manual/ Auto)	MPG Sync Encoder Ratio Specifier 1	15 14 0 0 0 1 1 0 1 1	Sets MPG/sync encoder ratio (1) Sets MPG/sync encoder ratio (2) Sets MPG/sync encoder ratio (3) Sets MPG/sync encoder ratio (4)	301
		15 (Manual/ Auto)	MPG Sync Encoder Ratio Specifier 2			301

CS1W-MC421 PLC Interface Area Outputs (CPU Unit to MC Unit) n = CIO 2000 + 10 x unit number (words)

Word	Contents	Bit	Description	Page
n+12	Y-axis Control Bits	00 to 15	Y-axis override 0001 to 07CF (4-digit hex) (Decimal: 0001 to 1999) (Decimal: 0001 to 1999 → 0.1% to 199.9% (0.1% increments) Refer to X-axis Control Bits in n+10.	279
n+13		00 to 15	Y-axis Control Bits Refer to X-axis Control Bits in n+11.	280
n+14	Z-axis Control Bits	00 to 15	Z-axis override 0001 to 07CF (4-digit hex) (Decimal: 0001 to 1999) (Decimal: 0001 to 1999 → 0.1% to 199.9% (0.1% increments) Refer to X-axis Control Bits in n+10.	279
n+15		00 to 15	Z-axis Control Bits Refer to X-axis Control Bits in n+11.	280
n+16	U-axis Control Bits	00 to 15	U-axis override 0001 to 07CF (4-digit hex) (Decimal: 0001 to 1999) (Decimal: 0001 to 1999 → 0.1% to 199.9% (0.1% increments) Refer to X-axis Control Bits in n+10.	279
n+17		00 to 15	U-axis Control Bits Refer to X-axis Control Bits in n+11.	280

CS1W-MC421 PLC Interface Area Inputs (MC Unit to CPU Unit) n = CIO 2000 + 10 x unit number (words)

<table>
<tr><th>Word</th><th>Contents</th><th>Bit</th><th colspan="3">Description</th><th>Page</th></tr>
<tr><td>n+18</td><td>System Status</td><td>00 to 03</td><td colspan="3">Error Type Data
<table>
<tr><th colspan="4">Bits</th><th>Error</th><th>Remarks</th></tr>
<tr><th>03</th><th>02</th><th>01</th><th>00</th><th></th><th></th></tr>
<tr><td>0</td><td>0</td><td>0</td><td>0</td><td>Normal</td><td>Error Flag will be OFF.</td></tr>
<tr><td>0</td><td>0</td><td>0</td><td>1</td><td>System error</td><td rowspan="11">Error Flag will turn ON too.</td></tr>
<tr><td>0</td><td>0</td><td>1</td><td>0</td><td>Task 1 error</td></tr>
<tr><td>0</td><td>0</td><td>1</td><td>1</td><td>Task 2 error</td></tr>
<tr><td>0</td><td>1</td><td>0</td><td>0</td><td>Task 3 error</td></tr>
<tr><td>0</td><td>1</td><td>0</td><td>1</td><td>Task 4 error</td></tr>
<tr><td>0</td><td>1</td><td>1</td><td>0</td><td>X-axis error</td></tr>
<tr><td>0</td><td>1</td><td>1</td><td>1</td><td>Y-axis error</td></tr>
<tr><td>1</td><td>0</td><td>0</td><td>0</td><td>Z-axis error</td></tr>
<tr><td>1</td><td>0</td><td>0</td><td>1</td><td>U-axis error</td></tr>
</table>
When an error occurs, an error output indicating the error type will be turned ON and will remain valid until the error is corrected.</td><td>301</td></tr>
<tr><td></td><td></td><td>04</td><td>Autoloading</td><td>1</td><td>Autoloading started.</td><td>302</td></tr>
<tr><td></td><td></td><td></td><td></td><td>↓</td><td>Autoloading finished.</td><td></td></tr>
<tr><td></td><td></td><td>05</td><td>Autoloading Error</td><td>1</td><td>An error occurred during autoloading.</td><td>303</td></tr>
<tr><td></td><td></td><td></td><td></td><td>↓</td><td>Autoloading Error Reset has been turned ON.</td><td></td></tr>
<tr><td></td><td></td><td>06</td><td>Data Transmission</td><td>1</td><td>Data is being transmitted.</td><td>304</td></tr>
<tr><td></td><td></td><td></td><td></td><td>↓</td><td>Data transmission has been completed.</td><td></td></tr>
<tr><td></td><td></td><td>07</td><td>Data Transmission Error</td><td>1</td><td>An error occurred during data transmission.</td><td>304</td></tr>
<tr><td></td><td></td><td></td><td></td><td>↓</td><td>Data has been resent normally.</td><td></td></tr>
<tr><td></td><td></td><td>08</td><td>Data Reception</td><td>1</td><td>Data is being received.</td><td>304</td></tr>
<tr><td></td><td></td><td></td><td></td><td>↓</td><td>Data reception has been completed.</td><td></td></tr>
<tr><td></td><td></td><td>09</td><td>Data Reception Error</td><td>1</td><td>An error occurred during data reception.</td><td>305</td></tr>
<tr><td></td><td></td><td></td><td></td><td>↓</td><td>Retransmitted data has been received normally.</td><td></td></tr>
<tr><td></td><td></td><td>10</td><td>Flash Memory Write</td><td>1</td><td>Data is being written to the flash memory.</td><td>305</td></tr>
<tr><td></td><td></td><td></td><td></td><td>↓</td><td>Data transmission to the flash memory has been completed.</td><td></td></tr>
<tr><td></td><td></td><td>11</td><td>Teaching Box in Enable Mode</td><td>1</td><td>The Teaching Box is in enable mode.</td><td>306</td></tr>
<tr><td></td><td></td><td></td><td></td><td>0</td><td>The Teaching Box is not in enable mode.</td><td></td></tr>
<tr><td></td><td></td><td>12</td><td>Teaching Box in Protect Mode</td><td>1</td><td>The Teaching Box is in protect mode.</td><td>306</td></tr>
<tr><td></td><td></td><td></td><td></td><td>0</td><td>The Teaching Box is not in protect mode.</td><td></td></tr>
<tr><td></td><td></td><td>13</td><td colspan="3">Not used.</td><td>---</td></tr>
<tr><td></td><td></td><td>14</td><td>Error</td><td>1</td><td>An error has occurred.</td><td>307</td></tr>
<tr><td></td><td></td><td></td><td></td><td>↓</td><td>Error Reset is ON.</td><td></td></tr>
<tr><td></td><td></td><td></td><td></td><td>0</td><td>No error has occurred.</td><td></td></tr>
<tr><td></td><td></td><td>15</td><td>Autoloading Time Up</td><td>1</td><td>Communications not possible even after waiting for the monitoring time period set in the system parameters.</td><td>308</td></tr>
<tr><td></td><td></td><td></td><td></td><td>↓</td><td>Autoloading Error Reset has been turned from OFF to ON.</td><td></td></tr>
</table>

CS1W-MC421 PLC Interface Area Inputs (MC Unit to CPU Unit) n = CIO 2000 + 10 x unit number (words)

Word	Contents	Bit	Description	Page
n+19	System Status	00 to 15	Error code (4-digit Hex) $x16^3$ | $x16^2$ | $x16^1$ | $x16^0$ Normal: 0000 The above is the error code format of the MC Unit. An error code is valid while the Error Flag is ON. If an error occurs, check the error type data to find the type of error, such as a system, tasks 1 to 4, X-axis, to U-axis error.	309

CS1W-MC421 PLC Interface Area Inputs (MC Unit to CPU Unit) n = CIO 2000 + 10 x unit number (words)

Word	Contents	Bit	Description			Page
n+20	Task 1 Status Flags	00 to 15	Task 1 M code 0000 to 03E7 (4-digit Hex) (Decimal: 0000 to 0999) 0 | $x16^2$ | $x16^1$ | $x16^0$ The M code is output, which is valid when the M strobe is turned ON.			309
n+21		00 to 15	Task 1 Executing program number 0000 to 03E7 (4-digit Hex) (Decimal: 0000 to 0999) 0 | $x16^2$ | $x16^1$ | $x16^0$ The program number of the program currently being executed or currently on standby for task 1 is output.			310
n+22		00 to 15	Task 1 Executing block number 0000 to 03E7 (4-digit Hex) (Decimal: 0000 to 0999) 0 | $x16^2$ | $x16^1$ | $x16^0$ The block number of the block currently being executed or currently on standby for task 1 is output.			310
n+23		00	Task Error Flag	1	A task error occurred.	310
				↓	Error Reset is ON.	
				0	Normal	
		01	Not used.			---
		02	Automatic Mode Flag	1	The Unit is in Automatic Mode.	310
				0	Mode other than the above	
		03	Manual Mode Flag	1	The Unit is in Manual Mode.	311
				0	Mode other than the above	
		04	Program Execution Flag	1	The MC program is being executed.	311
				0	Mode other than the above	
		05	Program Execution Completed Flag	1	MC program execution has been completed. (G79 was executed.)	312
				0	Mode other than the above	
		06	Optional Input Standby	1	Waiting for optional input	313
				0	Mode other than the above	
		07	M Code Reset Standby	1	Waiting for M code reset	313
				0	Mode other than the above	
		08	M Strobe	1	An M code (0 to 999) is being output.	314
				↓	M code reset	
		09	Cycle Start Received	1	The Cycle Start Signal was received.	315
				↓	The Cycle Start Signal is OFF.	
		10 to 12	Not used.			---
		13	Teaching Completed	1	Teaching has been completed.	316
				↓	Teaching command is OFF.	
		14	Teaching Error	1	A teaching error occurred.	316
				↓	OFF when the next teaching command has been completed normally or teaching address setting has been completed.	
		15	Teaching Address Over	1	A teaching address was too high.	317
				↓	OFF when the next teaching command has been completed normally or teaching address setting has been completed.	

CS1W-MC421 PLC Interface Area Inputs (MC Unit to CPU Unit) n = CIO 2000 + 10 x unit number (words)

Word	Contents	Bit	Description	Page
n+24	Task 2 Status Flags	00 to 15	Task 2 M code 0000 to 03E7 (4-digit hex) (Decimal: 0000 to 0999) Refer to Task 1 M code in n+20.	309
n+25		00 to 15	Task 2 Executing program number 0000 to 03E7 (4-digit hex) Refer to Task 1 Executing program number in n+21.	310
n+26		00 to 15	Task 2 Executing block number 0000 to 03E7 (4-digit hex) Refer to Task 1 Executing block number in n+22.	310
n+27		00 to 15	Task 2 Status Flags Refer to Task 1 Status Flags in n+23.	310
n+28	Task 3 Status Flags	00 to 15	Task 3 M code 0000 to 03E7 (4-digit hex) (Decimal: 0000 to 0999) Refer to Task 1 M code in n+20.	309
n+29		00 to 15	Task 3 Executing program number 0000 to 03E7 (4-digit hex) Refer to Task 1 Executing program number in n+21.	310
n+30		00 to 15	Task 3 Executing block number 0000 to 03E7 (4-digit hex) Refer to Task 1 Executing block number in n+22.	310
n+31		00 to 15	Task 3 Status Flags Refer to Task 1 Status Flags in n+23.	310
n+32	Task 4 Status Flags	00 to 15	Task 4 M code 0000 to 03E7 (4-digit hex) (Decimal: 0000 to 0999) Refer to Task 1 M code in n+20.	309
n+33		00 to 15	Task 4 Executing program number 0000 to 03E7 (4-digit hex) Refer to Task 1 Executing program number in n+21.	310
n+34		00 to 15	Task 4 Executing block number 0000 to 03E7 (4-digit hex) Refer to Task 1 Executing block number in n+22.	310
n+35		00 to 15	Task 4 Status Flags Refer to Task 1 Status Flags in n+23.	310
n+36 n+37	X-axis Status Flags	00 to 15	X-axis present position (32-bit signed data) The present position of the reference coordinate system is output. The position of the decimal point is determined by the system parameter settings. 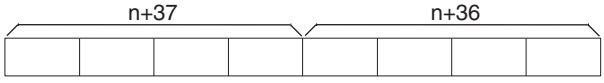 Present Position Range: FD9DA601 Hex to 026259FF Hex (–39999999 to 39999999) Example: The present position of –100 (FFFFFF9C) is output as shown below. When the minimum setting unit for the X axis is 0.1, this value will be displayed as –10.0. 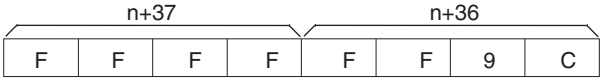	318

CS1W-MC421 PLC Interface Area Inputs (MC Unit to CPU Unit) n = CIO 2000 + 10 x unit number (words)

Word	Contents	Bit	Description			Page
n+38	X-axis Status Flags	00	Reference Origin	1	Within the in-position range of the reference origin	318
				0	Outside the in-position range of the reference origin	
		01	Busy Flag	1	A manual command is being executed.	319
				0	Other than the above	
		02	Servo-lock ON	1	Servo-lock status	320
				0	Servo-unlock status	
		03	No Origin Flag	1	No origin (Reference origin is not fixed.)	320
				0	The reference origin has been established.	
		04	Axis Operating	1	There is an axis movement command.	321
				0	There is no axis movement command.	
		05	Positioning Completed	1	Within the in-position range	322
				0	Outside the in-position range	
		06	Error Counter Warning	1	The number of accumulated pulses in the error counter exceeds the error counter warning value.	322
				0	Other than the above	
		07	Alarm Input	1	The driver alarm input is ON.	323
				0	The driver alarm input is OFF.	
		08	Zone 1 Flag	1	Within zone 1	323
				0	Outside of zone 1	
		09	Zone 2 Flag	1	Within zone 2	323
				0	Outside of zone 2	
		10	Zone 3 Flag	1	Within zone 3	323
				0	Outside of zone 3	
		11	Zone 4 Flag	1	Within zone 4	323
				0	Outside of zone 4	
		12	Zone 5 Flag	1	Within zone 5	323
				0	Outside of zone 5	
		13	Zone 6 Flag	1	Within zone 6	323
				0	Outside of zone 6	
		14	Zone 7 Flag	1	Within zone 7	323
				0	Outside of zone 7	
		15	Zone 8 Flag	1	Within zone 8	323
				0	Outside of zone 8	
n+39 n+40	Y-axis Status Flags	00 to 15	Y-axis present position (32-bit signed data) The present position of the reference coordinate system is output. The position of the decimal point is determined by the system parameter settings. n+39: Rightmost 16 bits, n+40: Leftmost 16 bits Refer to X-axis present position in n+36 and n+37.			318
n+41		00 to 15	Y-axis Status Refer to X-axis Status in n+38.			318

CS1W-MC421 PLC Interface Area Inputs (MC Unit to CPU Unit) n = CIO 2000 + 10 x unit number (words)

Word	Contents	Bit	Description	Page
n+42 n+43	Z-axis Status Flags	00 to 15	Z-axis present position (32-bit signed data) The present position of the reference coordinate system is output. The position of the decimal point is determined by the system parameter settings. n+42: Rightmost 16 bits, n+43: Leftmost 16 bits Refer to X-axis present position in n+36 and n+37.	318
n+44		00 to 15	Z-axis Status Refer to X-axis Status in n+38.	318
n+45 n+46	U-axis Status Flags	00 to 15	U-axis present position (32-bit signed data) The present position of the reference coordinate system is output. The position of the decimal point is determined by the system parameter settings. n+42: Rightmost 16 bits, n+43: Leftmost 16 bits Refer to X-axis present position in n+36 and n+37.	318
n+47		00 to 15	U-axis Status Refer to X-axis Status in n+38.	318
n+48 n+49	Reserved for the system.			---

Appendix D

System Parameters

Data Configuration for System Parameters

In the table, R means the parameter is read-only and R/W means the data can be read and written. Only the X and Y axes and tasks 1 and 2 are available with the CS1W-MC221. Numbers for addresses and default settings are hexadecimal on top and are decimal in parenthesis () at the bottom.

Unit Parameters

Address		R/W	Name	Description	Default setting Top: L + 1, Bottom: L	
MC221	MC421				MC221	MC421
0FA0 (4000)	0FA0 (4000)	R	Axis configuration	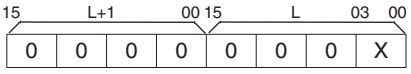 X = 1: One axis is used, X = 2: Two axes are used, X = 3: Three axes are used, X = 4: Four axes are used	0000 0002 (2)	0000 0004 (4)
0FA1 (4001)	0FA1 (4001)	R	No. of tasks	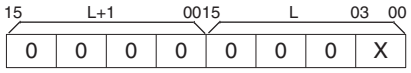 X = 1: One task is used, X = 2: Two tasks are used, X = 3: Three tasks are used, X = 4: Four tasks are used	0000 0001 (1)	0000 0001 (1)
0FA2 (4002)	0FA2 (4002)	R	Task axis declaration (for task 1)	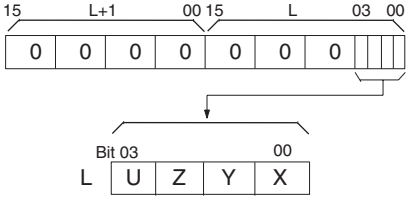 Specifies the axis or axes used for task 1. Bits 00 to 03 correspond to axes X through U. X = 1: Axis is used. X = 0: Axis is not used.	0000 0003 (3)	0000 000F (15)
0FA3 (4003)	0FA3 (4003)	R	Task axis declaration (for task 2)	Specifies the axis or axes used for task 2. The data configuration is the same as that of the task axis declaration for task 1.	0000 0000 (0)	
---	0FA4 (4004)	R	Task axis declaration (for task 3)	Specifies the axis or axes used for task 3. The data configuration is the same as that of the task axis declaration for task 1.	0000 0000 (0)	
---	0FA5 (4005)	R	Task axis declaration (for task 4)	Specifies the axis or axes used for task 4. The data configuration is the same as that of the task axis declaration for task 1.	0000 0000 (0)	

Address		R/W	Name	Description	Default setting Top: L + 1, Bottom: L	
MC221	MC421				MC221	MC421
0FA6 (4006)	0FA6 (4006)	R	Output port setting	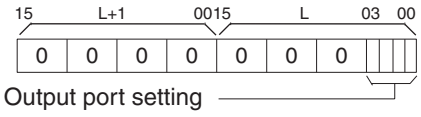 Specifies whether the output ports will be used for general output or brake signal output. Bits 00 to 03 correspond to output ports 1 to 4 if the ports are used for general output and to axes X through U if the ports are used for brake signal output. 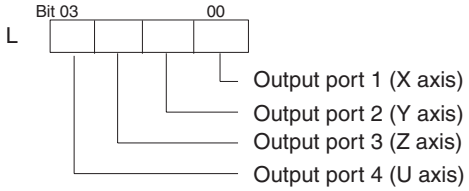 X = 0: General output, X = 1: Brake signal output	0000 0003 (3)	0000 000F (15)
0FA7 (4007)	0FA7 (4007)	R	MPG/sync encoder ratio	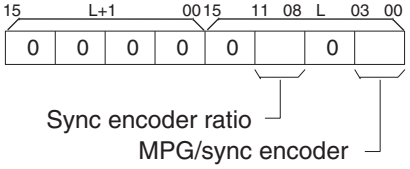 Specifying MPG/sync encoder. Specifies whether to use an MPG or a sync encoder. X = 0: MPG, X = 1: Sync encoder Sync encoder ratio Specifies the sync encoder ratio. X = 0: ratio of 4, X = 1: ratio of 2, X = 2: ratio of 1	0000 0000 (0)	
0FA8 (4008)	0FA8 (4008)	R	Pass Mode	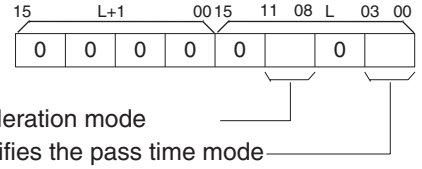 Specifying the pass time mode Specifies whether to move to the next operation in the preceding interpolation acceleration time or to the next operation in the preceding interpolation deceleration time during pass operation. X = 0: Interpolation acceleration time, X = 1: Interpolation deceleration time Acceleration mode Specifies whether to linearly interpolate or accelerate just one axis or to accelerate the axis at a fixed rate until the start of pass operation. X = 0: Invalid, X = 1: Valid (Fixed acceleration)	0000 0000 (0)	

Address		R/W	Name	Description	Default setting Top: L + 1, Bottom: L	
MC221	MC421				MC221	MC421
0FA9 (4009)	0FA9 (4009)	R	Teaching Box language/autoload timeout	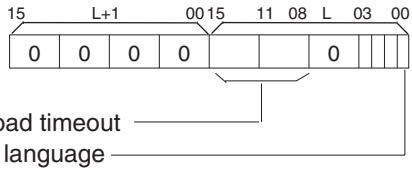 T.Box language Specifies whether the T.Box message is displayed in English or Japanese. (Only bit 0 is valid) X = 0: English, X = 1: Japanese Autoload timeout Specifies whether the time up time is displayed when the automatic loading function is used. Range: 00 to B4Hex (0 to 180 s) Time up will not be monitored if 00 is set.	0000 0000 (0)	
1004 (4100)	1004 (4100)	R	First position data number for task 1	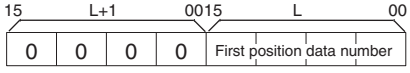 Specifies the first position data number for task 1.	0000 0000 (0)	
1005 (4101)	1005 (4101)	R	Last position data number for task 1	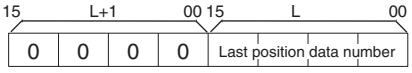 Specifies the last position data for number task 1. Teaching is possible in this range only. Range: 0000 to 07CF Hex (0 to 1999)	0000 07CF (1999)	
1006 (4102)	1006 (4102)	R	First position data number for task 2	Specify the first and last position data numbers for task 2. The data configuration and range are the same as those for task 1.	0000 0000 (0)	
1007 (4103)	1007 (4103)	R	Last position data number for task 2		0000 07CF (1999)	
---	1008 (4104)	R	First position data number for task 3	Specify the first and last position data number for task 3. The data configuration and range are the same as those for task 1.	0000 0000 (0)	
---	1009 (4105)	R	Last position data number for task 3		0000 07CF (1999)	
100A ---	100A (4106)	R	First position data number for task 4	Specify the first and last position data number for task 4. The data configuration and range is the same as that for task 1.	0000 0000 (0)	
100B ---	100B (4107)	R	Last position data number for task 4		0000 07CF (1999)	
100C (4108)	100C (4108)	R	Reserved for the system	These addresses are reserved for the system.	---	
100D (4109)	100D (4109)	R	Reserved for the system		---	

Machine Parameters

Address				R/W	Name	Description	Default setting Top: L + 1, Bottom: L
MC221		MC421					
X	Y	Z	U				
1068 (4200)	1081 (4225)	109A (4250)	10B3 (4275)	R	Minimum unit setting	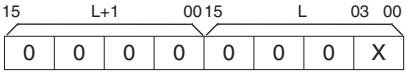 Specifies the minimum unit (i.e., the decimal position) for the mechanical system. X = 0 (1) X = 1 (0.1) X = 2 (0.01) X = 3 (0.001) X = 4 (0.0001)	0000 0000 (0)
1069 (4201)	1082 (4226)	109B (4251)	10B4 (4276)	R	Axis Mode/display unit	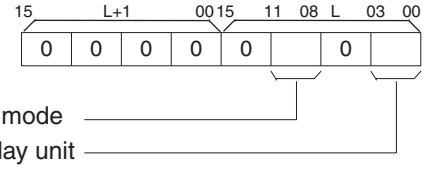 Axis Mode Specifies the Axis Feed Mode. X = 0: Normal Feed Mode, X = 1: Unlimited Feed Mode Display unit Specifies unit displayed by CX-Motion.	0000 0000 (3)
106A (4202)	1083 (4227)	109C (4252)	10B5 (4277)	R	Rotation direction	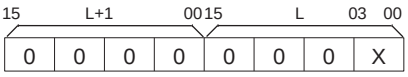 Specifies the rotation direction of the motor. X = 0: CW with positive voltage. X = 1: CCW with positive voltage.	0000 0000 (0)
106B (4203)	1084 (4228)	109D (4253)	10B6 (4278)	R	Emergency stop/limit input stop	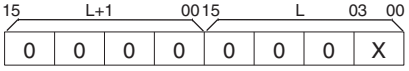 Specifies machine movement with emergency stop input or CW/CCW limit switch input. X = 0: Voltage output set to 0 V immediately. The servo driver RUN command output will turn OFF after voltage is output for 0.5 s. X = 1: Stop after error count is exhausted.	0000 0000 (0)
106C (4204)	1085 (4229)	109E (4254)	10B7 (4279)	R	Encoder ABS/INC	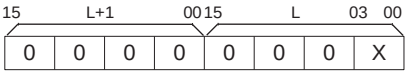 Specifies the type of encoder. X = 0: Incremental encoder X = 1: Absolute encoder for U or W Series X = 2: Absolute encoder for G Series **Note** "2: Absolute encoder for G Series" can be used with unit version 1.1 or later.	0000 0000 (0)
106D (4205)	1086 (4230)	109F (4255)	10B8 (4280)	R	Encoder resolution	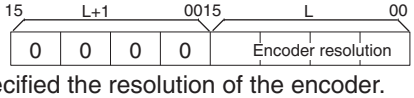 Specified the resolution of the encoder. Range: 0001 to FFFF Hex (1 to 65535 [ppr])	0000 0000 (1000)

Address				R/W	Name	Description	Default setting Top: L + 1, Bottom: L
MC221		MC421					
X	Y	Z	U				
106E (4206)	1087 (4231)	10A0 (4256)	10B9 (4281)	R	Encoder ratio	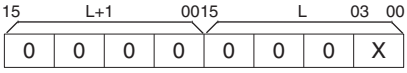 Specifies the multiplier ratio for the encoder. X = 0: ratio of 4, X = 1: ratio of 2, X = 2: ratio of 1	0000 0000 (0)
106F (4207)	1088 (4232)	10A1 (4257)	10BA (4282)	R	Encoder polarity	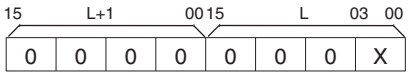 Specifies the polarity of the encoder. X = 0: CW with increments. X = 1: CCW with decrements.	0000 0000 (0)
1070 (4208)	1089 (4233)	10A2 (4258)	10BB (4283)	R	Pulse rate numerator	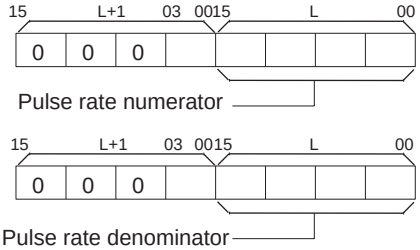 Specify the numerator and denominator of the pulse rate. Range: 00000001 to 000186A0 Hex (1 to 100000) The pulse rate indicates the weight of each encoder feedback pulse (mm/pulse, deg/pulse, inches/pulse, pulses/pulse). Range: 1/100000 ≤ pulse rate ≤ 1	0000 0001 (1)
1071 (4209)	108A (4234)	10A3 (4259)	10BC (4284)	R	Pulse rate denomi-nator		0000 0001 (1)
1072 (4210)	108B (4235)	10A4 (4260)	10BD (4285)	R	Max. motor frequency	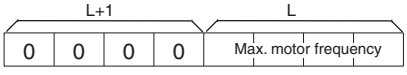 Specifies the maximum motor frequency. Range: 0001 to 7FFF Hex (1 to 32767 [r/min])	0000 0BB8 (3000)
1073 (4211)	108C (4236)	10A5 (4261)	10BE (4286)	R	Reserved for the system	These addresses are reserved for the system.	---
1074 (4212)	108D (4237)	10A6 (4262)	10BF (4287)	R	Reserved for the system	These addresses are reserved for the system.	---
1075 (4213)	108E (4238)	10A7 (4263)	10C0 (4288)	R	Software limit (–)	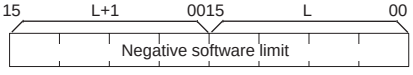	FD9D A601 (–39999999)
1076 (4214)	108F (4239)	10A8 (4264)	10C1 (4289)	R	Software limit (+)	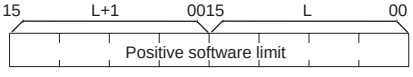 Specifies the negative and positive software limits. The data is 32-bit signed binary data. L+1: Leftmost 16 bits, L: Rightmost 16 bits Range: FD9DA601 to 026259FF Hex (–39999999 to 39999999) If the negative software limit is set to 18F Hex (399), the minimum setting unit is 0.01, and the unit is mm, the negative software limit would be 3.99 mm (399 x 0.01).	0262 59FF (39999999)

Address				R/W	Name	Description	Default setting Top: L + 1, Bottom: L
MC221		MC421					
X	Y	Z	U				
1077 (4215)	1090 (4240)	10A9 (4265)	10C2 (4290)	R	Origin search method	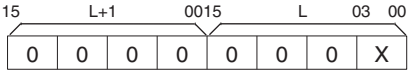 Specifies the method to search for the origin. X = 0: Origin mode when power is turned ON. X = 1: Limit reverse mode X = 2: Single direction mode	0000 0001 (1)
1078 (4216)	1091 (4241)	10AA (4266)	10C3 (4291)	R	Origin search direction	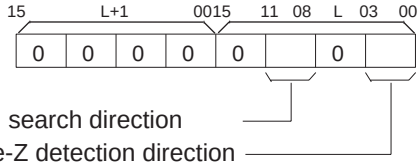 Specifies the phase-Z detection direction and origin search start direction for an origin search. If the origin search start direction is set to 1, then the search direction will be opposite the Z-phase detection direction only if the origin proximity signal input and CW/CCW limit signal input all turn OFF. X = 0: Same as the phase-Z detection direction, X = 1: Opposite the phase-Z detection direction Phase-Z Detection Direction Specifies the phase-Z detection direction. 0: Positive; 1: Negative Origin Search Direction	0000 0000 (0)
1079 (4217)	1092 (4242)	10AB (4267)	10C4 (4292)	R	Origin decelera-tion method	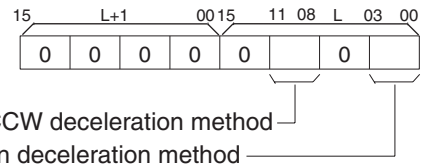 CW/CCW deceleration method Specifies the deceleration method when the CW or CCW limit input signal is detected. X = 0: Accumulate pulses to stop, X = 1: Decelerate to a stop Origin deceleration method Specifies the origin deceleration method. 0: Use the origin proximity input signal. 1: Use the limit input signal for the origin proximity input signal.	0000 0000 (0)
107A (4218)	1093 (4243)	10AC (4268)	10C5 (4293)	R	Origin proximity input logic	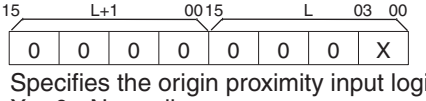 Specifies the origin proximity input logic. X = 0: Normally open. X = 1: Normally closed.	0000 0000 (0)
107B (4219)	1094 (4244)	10AD (4269)	10C6 (4294)	R	Wiring check	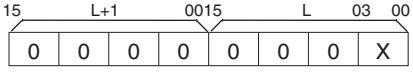 Specifies whether the wiring check function is used. X = 0: The wiring check function is not used. X = 1: The wiring check function is used.	0000 0001 (1)

Address				R/W	Name	Description	Default setting Top: L + 1, Bottom: L
MC221		MC421					
X	Y	Z	U				
107C (4220)	1095 (4245)	10AE (4270)	10C7 (4295)	R	Wiring check time	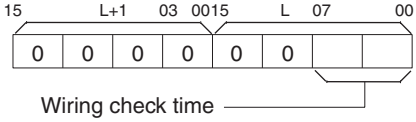 Specifies the wiring check time within a range of 0 to 99 (x 10 ms). Range: 00 to 63 Hex (0 to 99 [x 10 ms])	0000 000A (10)
107D (4221)	1096 (4246)	10AF (4271)	10C8 (4296)	R	Wiring check pulses	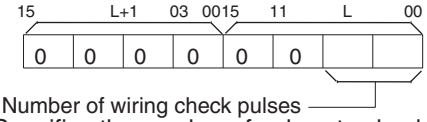 Specifies the number of pulses to check the wiring within a range of 0 to 999 pulses. Range: 000 to 3E7 Hex (0 to 999 [pulses])	0000 0032 (50)
107E (4222)	1097 (4247)	10B0 (4272)	10C9 (4297)	R	Absolute position setting	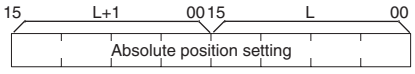 Specifies the correction value for the ABS encoder used when the ABS origin setting is executed. The data is 32-bit signed binary data. L+1: Leftmost 16 bits, L: Rightmost 16 bits Range: 80000000 to 7FFFFFFF Hex (–2147483648 to 2147483647)	0000 0000 (0)
107F (4223)	1098 (4248)	10B1 (4273)	10CA (4298)	R	Reserved for the system	These addresses are reserved for the system.	---
1080 (4224)	1099 (4249)	10B2 (4274)	10CB (4299)	R	Reserved for the system	These addresses are reserved for the system.	---

Coordinate System Parameters

Address				R/W	Name	Description	Default setting Top: L + 1, Bottom: L
MC221		MC421					
X	Y	Z	U				
10CC (4300)	10E5 (4325)	10FE (4350)	1117 (4375)	R/W	Reference origin offset value	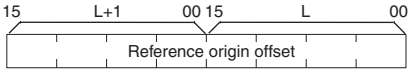 Specifies the offset of the reference origin. The data is 32-bit signed binary data. L+1: Leftmost 16 bits, L: Rightmost 16 bits Range: FD9DA601 to 026259FF Hex (–39999999 to 39999999) The minimum setting unit is set to 2 (for 0.01), the display unit is set to 0 (for mm) and the reference origin offset is 3.99 [mm] (i.e., 399 x 0.01) if the data is 399. If the value is changed, the new value will be valid when the next origin search is executed.	0000 0000 (0)
10CD (4301)	10E6 (4326)	10FF (4351)	1118 (4376)	R/W	Workpiece origin offset value	Sets the offset value of the workpiece origin. There is no difference in data configuration, range, or unit between the workpiece origin offset value and reference origin offset value. When this value is changed, it will become valid from the time when the next program is executed from the first block.	0000 0000 (0)
10CE (4302)	10E7 (4327)	1100 (4352)	1119 (4377)	R/W	Reserved for the system	These addresses are reserved for the system.	---
10DF (4303)	10E8 (4328)	1101 (4353)	111A (4378)	R/W	Reserved for the system	These addresses are reserved for the system.	---

Feed-rate Parameters

Address				R/W	Name	Description	Default setting Top: L + 1, Bottom: L
MC221		MC421					
X	Y	Z	U				
1130 (4400)	1149 (4425)	1162 (4450)	117B (4475)	R	Maximum feed rate	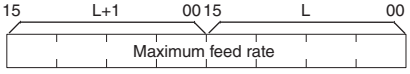 Specifies the upper feed rate limit. The data is 32-bit signed binary data. L+1: Leftmost 16 bits, L: Rightmost 16 bits Range: FD9DA601 to 026259FF Hex (–39999999 to 39999999) The range varies with the encoder resolution, pulse rate and display unit. The minimum setting unit is set to 2 (for 0.01), the display unit is set to 0 (for mm) and the maximum feed rate is 3.99 [mm/s] (i.e., 399 x 0.01) if the data is 399.	0003 0D40 (200000)
1131 (4401)	114A (4426)	1163 (4451)	117C (4476)	R	Maximum interpolation feed rate	Specifies the upper limit of the interpolation feed rate. There is no difference in data configuration, range, or unit between the maximum interpolation feed rate and maximum feed rate.	0003 0D40 (200000)

Address				R/W	Name	Description	Default setting Top: L + 1, Bottom: L
MC221		MC421					
X	Y	Z	U				
1132 (4402)	114B (4427)	1164 (4452)	117D (4477)	R	High-speed origin search feed rate	Specifies the high-speed origin search feed rate. There is no difference in data configuration, range, or unit between the high-speed origin search feed rate and maximum feed rate.	0000 4E20 (200000)
1133 (4403)	114C (4428)	1165 (4453)	117E (4478)	R	Low-speed origin search feed rate	Specifies the low-speed origin search feed rate. There is no difference in data configuration, range, or unit between the low-speed origin search feed rate and maximum feed rate.	0000 07D0 (2000)
1134 (4404)	114D (4429)	1166 (4454)	117F (4479)	R	Maximum jog feed rate	Specifies the upper limit of the jog feed rate. There is no difference in data configuration, range, or unit between the maximum jog feed rate and maximum feed rate.	0000 4E20 (20000)
1135 (4405)	114E (4430)	1167 (4455)	1180 (4480)	R	Acceleration/deceleration curve	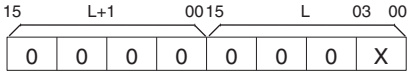 Specifies the type of acceleration/deceleration curve. X = 0: Trapezoidal curve X = 1: S-shaped curve	0000 0000 (0)
1136 (4406)	114F (4431)	1168 (4456)	1181 (4481)	R/W	Acceleration time	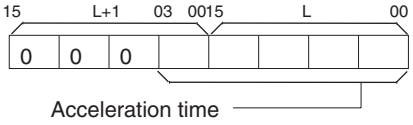 Sets the acceleration time to obtain the maximum feed rate. Range: 00000000 to 000186A0 Hex (0 to 100000 [ms])	0000 0064 (100)
1137 (4407)	1150 (4432)	1169 (4457)	1182 (4482)	R/W	Deceleration time	Sets the deceleration time to reduce the feed rate to zero from the maximum feed rate. The data configuration, range and units are the same as that for acceleration time.	0000 0064 (100)
1138 (4408)	1151 (4433)	116A (4458)	1183 (4483)	R/W	Interpolation acceleration time	Sets the acceleration time to obtain the maximum interpolation feed rate. There is no difference in data configuration, range, or unit between the deceleration time and interpolation acceleration time.	0000 0064 (100)
1139 (4409)	1152 (4434)	116B (4459)	1184 (4484)	R/W	Interpolation deceleration time	Sets the deceleration time to reduce the interpolation feed rate to zero from the maximum interpolation feed rate. There is no difference in data configuration, range, or unit between the interpolation deceleration time and deceleration time.	0000 0064 (100)

Address				R/W	Name	Description	Default setting Top: L + 1, Bottom: L
MC221		MC421					
X	Y	Z	U				
113A (4410)	1153 (4435)	116C (4460)	1185 (4485)	R/W	MPG ratio numerator (1)/ electronic gear numerator (1)	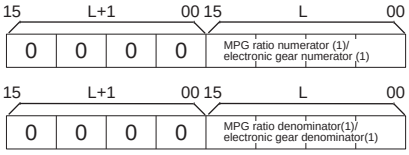 Sets the ratio for an MPG/electronic gear pulse for setting 1. Range of numerator: D8F0 to 2710 Hex (–10000 to 10000) Range of denominator: 0001 to 2710 Hex (1 to 10000) 0.0001 ≤ |Numerator/denominator| ≤ 10000 When the numerator is negative, operation is in the opposite direction. (In Unit Ver. 1.14 or earlier, the limit input in the direction opposite to movement is monitored. In Unit Ver. 1.15 or later and Units with model number ending in -V1, the limit input in the direction of movement is monitored. Take this into consideration in system design.)	0000 0001 (1)
113B (4411)	1154 (4436)	116D (4461)	1186 (4486)	R/W	MPG ratio denominator(1)/ electronic gear denominator(1)		0000 0001 (1)
113C (4412)	1155 (4437)	116E (4462)	1187 (4487)	R/W	MPG ratio numerator (2)/ electronic gear numerator (2)	Sets the ratio for an MPG/electronic gear pulse for setting 2. The data configuration and range are the same as that for MPG ratio/electronic gear numerator (1)/denominator (1).	0000 000A (10)
113D (4413)	1156 (4438)	116F (4463)	1188 (4488)	R/W	MPG ratio denominator (2)/ electronic gear denominator (2)		0000 0001 (1)
113E (4414)	1157 (4439)	1170 (4464)	1189 (4489)	R/W	MPG ratio numerator (3)/ electronic gear numerator (3)	Sets the ratio for an MPG/electronic gear pulse for setting 3. The data configuration and range are the same as that for MPG ratio/electronic gear numerator (1)/denominator (1).	0000 0064 (100)
113F (4415)	1158 (4440)	1171 (4465)	118A (4490)	R/W	MPG ratio denominator (3)/ electronic gear denominator (3)		0000 0001 (1)

Address				R/W	Name	Description	Default setting Top: L + 1, Bottom: L
MC221		MC421					
X	Y	Z	U				
1140 (4416)	1159 (4441)	1172 (4466)	118B (4491)	R/W	MPG ratio numerator (4)/ electronic gear numerator (4)	Sets the ratio for an MPG/electronic gear pulse for setting 4. The data configuration and range are the same as that for MPG ratio/electronic gear numerator (1)/denominator (1).	0000 00C8 (200)
1141 (4417)	115A (4442)	1173 (4467)	118C (4492)	R/W	MPG ratio denominator (4)/ electronic gear denominator (4)		0000 0001 (1)
1142 (4418)	115B (4443)	1174 (4468)	118D (4493)	R/W	Reserved for the system	These addresses are reserved for the system.	---
1143 (4419)	115C (4444)	1175 (4469)	118E (4494)	R/W	Reserved for the system	These addresses are reserved for the system.	---

Note The above parameters are used as the electronic gear ratio setting when MPG is selected in the unit parameters or the MPG ratio and sync encoder are selected.

Zone Parameters

Address				R/W	Name	Description	Default setting Top: L + 1, Bottom: L
MC221		MC421					
X	Y	Z	U				
1194 (4500)	11AD (4525)	11C6 (4550)	11DF (4575)	R/W	Zone specification	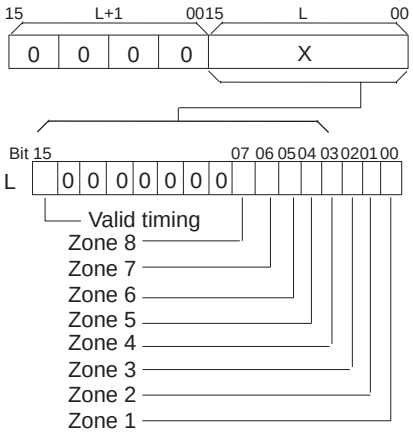 Valid timing Sets timing for validating zone settings. X = 0: Validates a zone at the end of the origin search, X = 1: Validates a zone whether or not the origin search is completed. Zone 1 to 8 Validates or invalidates zone 1 to zone 8 settings. Bits 00 to 07 correspond to zones 1 to 8.	0000 0000 (0)
1195 (4501)	11AE (4526)	11C7 (4551)	11E0 (4576)	R/W	Zone 1 negative direction setting	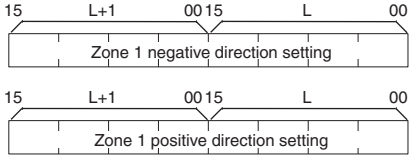 Sets the negative or positive direction range of zone 1. The data is 32-bit signed binary data. L+1: Leftmost 16 bits, L: Rightmost 16 bits Range: FD9DA601 to 026259FF Hex (–39999999 to 39999999) This setting is referenced when a specified zone is valid and it must satisfy the following condition. Negative direction set value ≤ Positive direction set value The minimum setting unit is set to 2 (for 0.01), the display unit is set to 0 (for mm) and the negative direction set value for zone 1 is 3.99 [mm] (i.e., 399 x 0.01) if the data is 399.	0000 0000 (0)
1196 (4502)	11AF (4527)	11C8 (4552)	11E1 (4577)	R/W	Zone 1 positive direction setting		0000 0000 (0)
1197 (4503)	11B0 (4528)	11C9 (4553)	11E2 (4578)	R/W	Zone 2 negative direction setting	Sets the negative or positive direction range of zone 2. The data configurations, ranges, and units for the negative and positive direction set values are the same as those for zone 1.	0000 0000 (0)
1198 (4504)	11B1 (4529)	11CA (4554)	11E3 (4579)	R/W	Zone 2 positive direction setting		

Address				R/W	Name	Description	Default setting Top: L + 1, Bottom: L
MC221		MC421					
X	Y	Z	U				
1199 (4505)	11B2 (4530)	11CB (4555)	11E4 (4580)	R/W	Zone 3 negative direction setting	Sets the negative or positive direction range of zone 3. The data configurations, ranges, and units for the negative and positive direction set values are the same as those for zone 1.	0000 0000 (0)
119A (4506)	11B3 (4531)	11CC (4556)	11E5 (4581)	R/W	Zone 3 positive direction setting		
119B (4507)	11B4 (4532)	11CD (4557)	11E6 (4582)	R/W	Zone 4 negative direction setting	Sets the negative or positive direction range of zone 4. The data configurations, ranges, and units for the negative and positive direction set values are the same as those for zone 1.	0000 0000 (0)
119C (4508)	11B5 (4533)	11CE (4558)	11E7 (4583)	R/W	Zone 4 positive direction setting		
119D (4509)	11B6 (4534)	11CF (4559)	11E8 (4584)	R/W	Zone 5 negative direction setting	Sets the negative or positive direction range of zone 5. The data configurations, ranges, and units for the negative and positive direction set values are the same as those for zone 1.	0000 0000 (0)
119E (4510)	11B7 (4535)	11D0 (4560)	11E9 (4585)	R/W	Zone 5 positive direction setting		
119F (4511)	11B8 (4536)	11D1 (4561)	11EA (4586)	R/W	Zone 6 negative direction setting	Sets the negative or positive direction range of zone 6. The data configurations, ranges, and units for the negative and positive direction set values are the same as those for zone 1.	0000 0000 (0)
11A0 (4512)	11B9 (4537)	11D2 (4562)	11EB (4587)	R/W	Zone 6 positive direction setting		
11A1 (4513)	11BA (4538)	11D3 (4563)	11EC (4588)	R/W	Zone 7 negative direction setting	Sets the negative or positive direction range of zone 7. The data configurations, ranges, and units for the negative and positive direction set values are the same as those for zone 1.	0000 0000 (0)
11A2 (4514)	11BB (4539)	11D4 (4564)	11ED (4589)	R/W	Zone 7 positive direction setting		
11A3 (4515)	11BC (4540)	11D5 (4565)	11EE (4590)	R/W	Zone 8 negative direction setting	Sets the negative or positive direction range of zone 8. The data configurations, ranges, and units for the negative and positive direction set values are the same as those for zone 1.	0000 0000 (0)
11A4 (4516)	11BD (4541)	11D6 (4566)	11EF (4591)	R/W	Zone 8 positive direction setting		

Servo Parameters

Address				R/W	Name	Description	Default setting Top: L + 1, Bottom: L
MC221		MC421					
X	Y	Z	U				
11F8 (4600)	1211 (4625)	122A (4650)	1243 (4675)	R/W	Error counter warning value	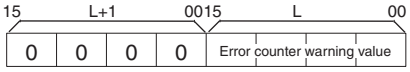 Sets the accumulated pulses warning value. Range: 0000 to FDE8 Hex (0 to 65000 [pulses])	0000 2710 (10000)
11F9 (4601)	1212 (4626)	122B (4651)	1244 (4676)	R/W	In-position	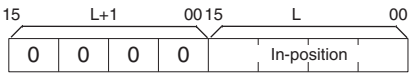 Sets to check the in-position. Range: 0000 to 2710 Hex (0 to 10000 [pulses])	0000 000A (10)
11FA (4602)	1213 (4627)	122C (4652)	1245 (4677)	R/W	Position loop gain	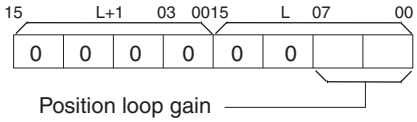 Sets the position loop gain. Range: 01 to FA Hex (1 to 250 [1/s])	0000 0028 (40)
11FB (4603)	1214 (4628)	122D (4653)	1246 (4678)	R/W	Position loop FF gain	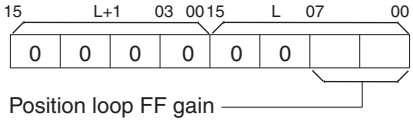 Sets the position loop FF gain. Range: 00 to 64 Hex (0 to 100 [%])	0000 0000 (0)
11FC (4604)	1215 (4629)	122E (4654)	1247 (4679)	R/W	Backlash correction value	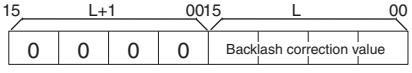 Sets the backlash correction value. Range: 0000 to 2710 Hex (0 to 10000 [pulses])	0000 0000 (0)
11FD (4605)	1216 (4630)	122F (4655)	1248 (4680)	R/W	Brake OFF time	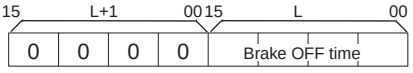 Sets the brake OFF time (the duration from the brake OFF output of the MC Unit to the actual brake OFF operation) when the output port is set for a brake output. Range: 0000 to 2710 hex (0 to 10000 [ms])	0000 0000 (0)
11FE (4606)	1217 (4631)	1230 (4656)	1249 (4681)	R/W	Brake ON time	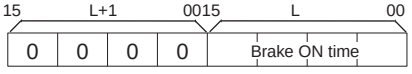 Sets the brake ON time (the duration from the brake ON output of the MC Unit to the actual brake ON operation) when the output port is set for a brake output. Range: 0000 to 2710 hex (0 to 10000 [ms])	0000 0000 (0)
11FF (4607)	1218 (4632)	1231 (4657)	124A (4682)	R/W	Reserved for the system	These addresses are reserved for the system.	---

Address				R/W	Name	Description	Default setting Top: L + 1, Bottom: L
MC221		MC421					
X	Y	Z	U				
1200 (4608)	1219 (4633)	1232 (4658)	124B (4683)	R/W	Reserved for the system	These addresses are reserved for the system.	---
1201 (4609)	121A (4634)	1233 (4659)	124C (4684)	R/W	Reserved for the system	These addresses are reserved for the system.	---

Position Data Addresses and Data Configuration

Specify position data at the following addresses in MC Unit memory. Specify the addresses in hexadecimal when using IOWR/IORD commands.

Data	Address range
Position data	0000 to 07CF (decimal: 0000 to 1999)

Each position is comprised of three words. Refer to *SECTION 4 Data Transfer and Storage* for more details about transferring data. Data can be transferred at any time.

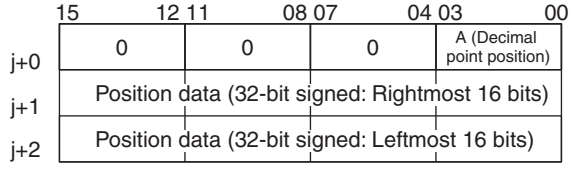

A: Decimal point position 0: x 1
1: x 0.1
2: x 0.01
3: x 0.001
4: x 0.0001

Example 1

The following is the configuration of a position data value of 123.45.

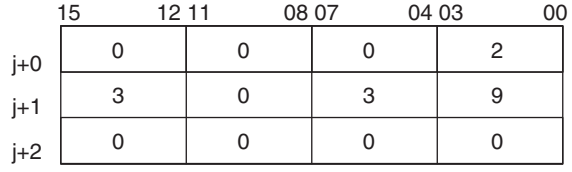

00003039 (Hex) = 12345 (decimal)

The decimal point position is 2, so it yields 123.45.

Example 2

The following is the configuration of a position data value of 12345.

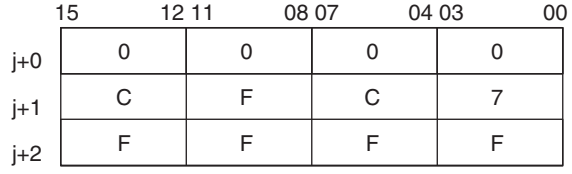

Monitor Data Configuration

Monitor data is all read-only. The CS1W-MC221 has only X and Y axes and tasks 1 and 2. In the address column, the top numbers are hexadecimal values and the bottom numbers in parenthesis () are decimal values.

Address		R/W	Name	Description
MC221	MC421			
1770 (6000)	1770 (6000)	R	System error code	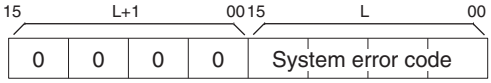 An error code will be set if a system error occurs. Refer to *SECTION 12 Troubleshooting* for more details on errors. The address is set to 0000 Hex when the system is normal.
1771 (6001)	1771 (6001)	R	Task 1 error code	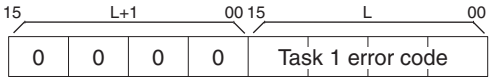 An error code will be set if a task 1 error occur. *SECTION 12 Troubleshooting* for more details on errors. If an axis error occurs for the axis being controlled by task1, an axis error code will be set, but the task 1 error code in this area will remain at 0000. The error code is set to 0000 Hex when the system is normal.
1772 (6002)	1772 (6002)	R	Task 2 error code	Outputs task 2 error codes. The data configuration is the same as that for task 1.
---	1773 (6003)	R	Task 3 error code	Outputs task 3 error codes. The data configuration is the same as that for task 1.
---	1774 (6004)	R	Task 4 error code	Outputs task 4 error codes. The data configuration is the same as that for task 1.
1775 (6005)	1775 (6005)	R	X-axis error code	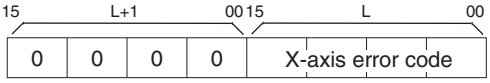 An error code will be set if an X-axis error occurs. Refer to *SECTION 12 Troubleshooting* for more details on errors. The address is set to 0000 Hex when the system is normal.
1776 (6006)	1776 (6006)	R	Y-axis error code	An error code will be set if a Y-axis error occurs. The data configuration is the same as that for the X axis.
---	1777 (6007)	R	Z-axis error code	An error code will be set if a Z-axis error occurs. The data configuration is the same as that for the X axis.
---	1778 (6008)	R	U-axis error code	An error code will be set if a U-axis error results. The data configuration is the same as that for the X axis.

<table>
<tr><th colspan="2">Address</th><th>R/W</th><th>Name</th><th>Description</th></tr>
<tr><th>MC221</th><th>MC421</th><th></th><th></th><th></th></tr>
<tr><td>177B
(6011)</td><td>177B
(6011)</td><td>R</td><td>I/O monitor data
(X/Y)</td><td>Outputs the ON or OFF status of each I/O signal of the MC Unit. Outputs the ON or OFF status of each MC Unit I/O signal on the X and Y axes.
 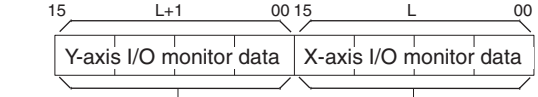

<table>
<tr><th>Bit</th><th></th><th>Name</th><th>Description</th></tr>
<tr><td>0</td><td>X-axis</td><td>General-purpose input 1</td><td rowspan="16">1: ON
0: OFF</td></tr>
<tr><td>1</td><td></td><td>General-purpose output 1</td></tr>
<tr><td>2 to 7</td><td></td><td>Not used (OFF)</td></tr>
<tr><td>8</td><td></td><td>CCW limit input signal</td></tr>
<tr><td>9</td><td></td><td>CW limit input signal</td></tr>
<tr><td>10</td><td></td><td>Origin proximity input signal</td></tr>
<tr><td>11</td><td></td><td>Emergency stop input signal</td></tr>
<tr><td>12</td><td></td><td>Driver alarm input signal</td></tr>
<tr><td>13</td><td></td><td>Run instruction output</td></tr>
<tr><td>14</td><td></td><td>Driver alarm reset output</td></tr>
<tr><td>15</td><td></td><td>Sensor ON output</td></tr>
</table>
<table>
<tr><th>Bit</th><th></th><th>Name</th><th>Description</th></tr>
<tr><td>0</td><td>Y-axis</td><td>General-purpose input 2</td><td rowspan="16">1: ON
0: OFF</td></tr>
<tr><td>1</td><td></td><td>General-purpose output 2</td></tr>
<tr><td>2 to 7</td><td></td><td>Not used (OFF)</td></tr>
<tr><td>8</td><td></td><td>CCW limit input signal</td></tr>
<tr><td>9</td><td></td><td>CW limit input signal</td></tr>
<tr><td>10</td><td></td><td>Origin proximity input signal</td></tr>
<tr><td>11</td><td></td><td>Emergency stop input signal</td></tr>
<tr><td>12</td><td></td><td>Driver alarm input signal</td></tr>
<tr><td>13</td><td></td><td>Run instruction output</td></tr>
<tr><td>14</td><td></td><td>Driver alarm reset output</td></tr>
<tr><td>15</td><td></td><td>Sensor ON output</td></tr>
</table></td></tr>
<tr><td>---</td><td>177C
(6012)</td><td>R</td><td>I/O monitor data
(Z/U)</td><td>Outputs the ON or OFF status of each MC Unit I/O signal on the Z and U axes. The data configuration is the same as that for I/O monitor data (X/Y). However, LCH bit 0 is general-purpose input 3, bit 1 is general-purpose output 3, LCH+1 bit 0 is general-purpose input 4, and bit 1 is general-purpose output 4.</td></tr>
<tr><td>1784
(6020)</td><td>1784
(6020)</td><td>R</td><td>Task 1 executing program no.</td><td> 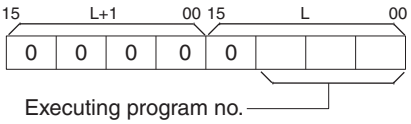

If a program is being executed, the number of the program will be output and if no program is being executed, the number of the last program executed will be output within a range of 000 to 3E7 Hex (0 to 999).</td></tr>
</table>

Address		R/W	Name	Description
MC221	MC421			
1785 (6021)	1785 (6021)	R	Task 1 executing block no.	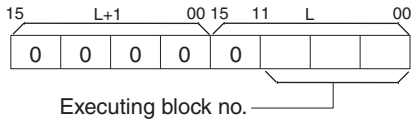 If a program is being executed, the block number of the program will be output and if no program is being executed, the block number of the last program executed will be output within a range of 000 to 3E7 Hex (0 to 999).
1786 (6022)	1786 (6022)	R	Task 1 teaching execution address	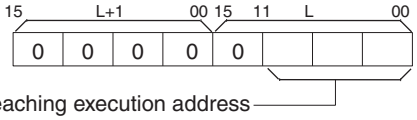 Outputs the address where position data is stored at the time of teaching within a range of 000 to 7CF Hex (0 to 1999). The address will be refreshed whenever teaching is executed.
1788 (6024)	1788 (6024)	R	Task 2 executing program no.	Refer to corresponding task 1 data.
1789 (6025)	1789 (6025)	R	Task 2 executing block no.	
178A (6026)	178A (6026)	R	Task 2 teaching execution address	
---	178C (6028)	R	Task 3 executing program no.	Refer to corresponding task 1 data.
---	178D (6029)	R	Task 3 executing block no.	
---	178E (6030)	R	Task 3 teaching execution address	
---	178F (6032)	R	Task 4 executing program no.	Refer to corresponding task 1 data.
---	1790 (6033)	R	Task 4 executing block no.	
---	1791 (6034)	R	Task 4 teaching execution address	
17A2 (6050)	17A2 (6050)	R	X-axis reference coordinate system present position	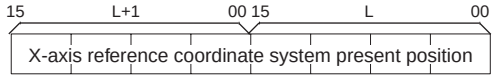 Outputs the X-axis reference coordinate system present position. The data is 32-bit signed binary data. L+1: Leftmost 16 bits, L: Rightmost 16 bits Range: FD9DA601 to 026259FF Hex (39999999 to 39999999) The minimum setting unit is set to 2 (for 0.01), the display unit is set to 0 (for mm) and the reference origin offset is 3.99 [mm] (i.e., 399 × 0.01) if the data is 399.
17A3 (6051)	17A3 (6051)	R	Y-axis reference coordinate system present position	Outputs the Y-axis reference coordinate system present position. See X-axis reference coordinate system present position for the data configuration.
---	17A4 (6052)	R	Z-axis reference coordinate system present position	Outputs the Z-axis reference coordinate system present position. See X-axis reference coordinate system present position for the data configuration.
---	17A5 (6053)	R	U-axis reference coordinate system present position	Outputs the U-axis reference coordinate system present position. See X-axis reference coordinate system present position for the data configuration.

Address		R/W	Name	Description
MC221	MC421			
17A6 (6054)	17A6 (6054)	R	X-axis workpiece coordinate system present position	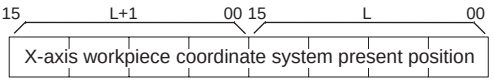 Outputs the workpiece coordinate system current position. The data is 32-bit signed binary data. L+1: Leftmost 16 bits, L: Rightmost 16 bits Range: FD9DA601 to 026259FF Hex (39999999 to 39999999) The minimum setting unit is set to 2 (for 0.01), the display unit is set to 0 (for mm) and the reference origin offset is 3.99 [mm] (i.e., 399 × 0.01) if the data is 399.
17A7 (6055)	17A7 (6055)	R	Y-axis workpiece coordinate system present position	Outputs the Y-axis workpiece coordinate system present position. See X-axis workpiece coordinate system present position for the data configuration.
---	17A8 (6056)	R	Z-axis workpiece coordinate system present position	Outputs the Z-axis workpiece coordinate system present position. See X-axis workpiece coordinate system present position for the data configuration.
---	17A9 (6057)	R	U-axis workpiece coordinate system present position	Outputs the U-axis workpiece coordinate system present position. See X-axis workpiece coordinate system present position for the data configuration.
17AA (6058)	17AA (6058)	R	X-axis reference coordinate system present position in pulses	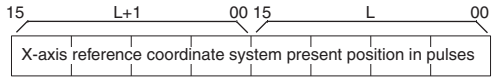 Outputs pulses for the X-axis reference coordinate system present position. The data is 32-bit signed binary data. L+1: Leftmost bit, L: Rightmost bit Range: FD9DA601 to 026259FF Hex (–39999999 to 39999999)
17AB (6059)	17AB (6059)	R	Y-axis reference coordinate system present position in pulses	Outputs pulses for the Y-axis reference coordinate system present position. See X-axis reference coordinate system present position in pulses for the data configuration.
---	17AC (6060)	R	Z-axis reference coordinate system present position in pulses	Outputs pulses for the Z-axis reference coordinate system present position. See X-axis reference coordinate system present position in pulses for the data configuration.
---	17AD (6061)	R	U-axis reference coordinate system present position in pulses	Outputs pulses for the U-axis reference coordinate system present position. See X-axis reference coordinate system present position in pulses for the data configuration.
17AE (6062)	17AE (6062)	R	X-axis error counter value in pulses	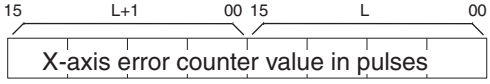 Outputs pulses for the X-axis error counter value. The data is 32-bit signed binary data. L+1: Leftmost bit, L: Rightmost bit Range: FFFF0000 to 0000FFFF Hex (–65536 to 65535)
17AF (6063)	17AF (6063)	R	Y-axis error counter value in pulses	Outputs pulses for the Y-axis error counter value. See X-axis error counter value in pulses for the data configuration.
---	17B0 (6064)	R	Z-axis error counter value in pulses	Outputs pulses for the Z-axis error counter value. See X-axis error counter value in pulses for the data configuration.
---	17B1 (6065)	R	U-axis error counter value in pulses	Outputs pulses for the U-axis error counter value. See X-axis error counter value in pulses for the data configuration.

Address		R/W	Name	Description
MC221	MC421			
17B2 (6066)	17B2 (6066)	R	X-axis workpiece origin shift value	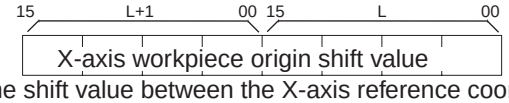 Outputs the shift value between the X-axis reference coordinate system origin and the workpiece coordinate system origin. The data is 32-bit signed binary data. L+1: Leftmost bit, L: Rightmost bit Range: FD9DA601 to 026259FF Hex (39999999 to 39999999) The minimum setting unit is set to 2 (for 0.01), the display unit is set to 0 (for mm) and the reference origin offset is 3.99 [mm] (i.e., 399 × 0.01) if the data is 399.
17B3 (6067)	17B3 (6067)	R	Y-axis workpiece origin shift value	Outputs the shift value between the Y-axis reference coordinate system origin and the workpiece coordinate system origin. See the X-axis workpiece origin shift value for the data configuration.
---	17B4 (6068)	R	Z-axis workpiece origin shift value	Outputs the shift value between the Z-axis reference coordinate system origin and the workpiece coordinate system origin. See the X-axis workpiece origin shift value for the data configuration.
---	17B5 (6069)	R	U-axis workpiece origin shift value	Outputs the shift value between the U-axis reference coordinate system origin and the workpiece coordinate system origin. See the X-axis workpiece origin shift value for the data configuration.
17B6 (6070)	17B6 (6070)	R	X-axis phase Z margin in pulses	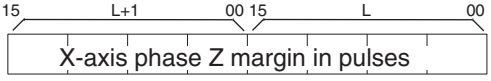 Outputs pulses for the distance between the origin proximity sensor and encoder phase-Z signal. Outputs pulses for the distance between the origin proximity sensor and the encoder phase A signal. The data is 32-bit signed binary data. L+1: Leftmost 16 bits, L: Rightmost 16 bits Range: FD9DA601 to 026259FF Hex (–39999999 to 39999999) 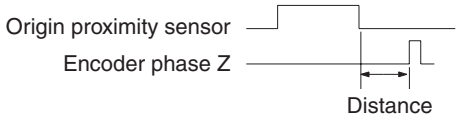 This data is refreshed whenever the origin search operation is completed. The distance fluctuates slightly due to the searching speed at the time phase Z is detected. This fluctuation can be determined from the following formula. Fluctuation (pulses) = Searching speed when phase Z is detected (pulses/s)/250
17B7 (6071)	17B7 (6071)	R	Y-axis phase Z margin in pulses	Outputs pulses for the Y-axis phase Z margin. See the X-axis phase Z margin for the data configuration.
---	17B8 (6072)	R	Z-axis phase Z margin in pulses	Outputs pulses for the Z-axis phase Z margin. See the X-axis phase Z margin for the data configuration.
---	17B9 (6073)	R	U-axis phase Z margin in pulses	Outputs pulses for the U-axis phase Z margin. See the X-axis phase Z margin for the data configuration.
17BA (6074)	17BA (6074)	R	X-axis reference coordinate system present position in pulses	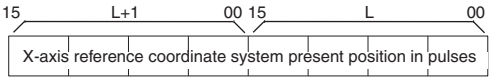 Outputs pulses for the X-axis reference coordinate system present position. A wider range of positions is output in comparison to the X-axis reference coordinate system output in pulses at address 17AA Hex (6058). The data is 32-bit signed binary data. L+1: Leftmost 16 bits, L: Rightmost 16 bits Range: 80000000 to 7FFFFFFF Hex (–2147483648 to 2147483647)

Address		R/W	Name	Description
MC221	MC421			
17BB (6075)	17BB (6075)	R	Y-axis reference coordinate system present position in pulses	Outputs pulses for the Y-axis reference coordinate system present position. A wider range of positions is output in comparison to the Y-axis reference coordinate system in pulses at address 17AB hex (6059). See X-axis reference coordinate system present position in pulses for the data configuration.
---	17BC (6076)	R	Z-axis reference coordinate system present position in pulses	Outputs pulses for the Z-axis reference coordinate system present position. A wider range of positions is output in comparison to the Z-axis reference coordinate system in pulses at address 17AC hex (6060). See X-axis reference coordinate system present position in pulses for the data configuration.
---	17BD (6077)	R	U-axis reference coordinate system present position in pulses	Outputs pulses for the U-axis reference coordinate system present position. A wider range of positions is output in comparison to the U-axis reference coordinate system in pulses at address 17AD hex (6061). See X-axis reference coordinate system present position in pulses for the data configuration.
17BE (6078)	17BE (6078)	R	Number of X-axis multiturns in pulses	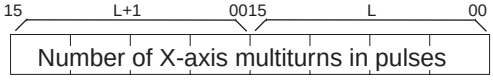 Outputs 32-bit signed binary pulses for the reference coordinate system present position. L+1: Leftmost 16 bits, L: Rightmost 16 bits Range: 80000000 to 7FFFFFFF Hex (2147483648 to 2147483647). The following output is a present position of 580000 pulses (8D9A0 in hexadecimal). 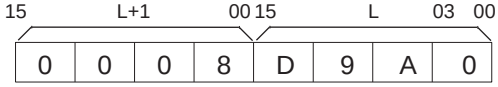 Although only –39999999 to 39999999 can be output at other present position addresses, –2147483648 to 2147483647 can be output at this present position address.
17BF (6079)	17BF (6079)	R	Number of Y-axis multiturns in pulses	Outputs 32-bit signed binary pulses for the reference coordinate system present position. See the number of X-axis multiturns in pulses for the data configuration.
---	17C0 (6080)	R	Number of Z-axis multiturns in pulses	Outputs 32-bit signed binary pulses for the reference coordinate system present position. See the number of X-axis multiturns in pulses for the data configuration.
---	17C1 (6081)	R	Number of U-axis multiturns in pulses	Outputs 32-bit signed binary pulses for the reference coordinate system present position. See the number of X-axis multiturns in pulses for the data configuration.

Command Area Data Configuration

In the table, W means the data can be written only and R/W means the data can be read and written. The CS1W-MC221 has only X and Y axes and tasks 1 and 2. In the address column, the top numbers are hexadecimal values and the bottom numbers in parenthesis () are decimal values.

Address		R/W	Name	Description
MC221	MC421			
17D4 (6100)	17D4 (6100)	R/W	Writing position data to the flash memory	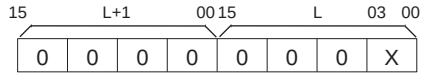 Writes position data to the flash memory. Writes position data to flash memory. Set this area at 1 to write posi-tion data to flash memory. The following appears after the data is read. X = 0: Write has not been executed or it has been completed. X = 1: Data is being written or a write error has occurred. The area will be set to 0 when the data has been written.
17D5 (6101)	17D5 (6101)	R/W	Writing system parameters to flash memory	Writes system parameters to flash memory. The meaning and usage here is the same as writing position data to flash memory.
17D6 (6102)	17D6 (6102)	W	Writing position data	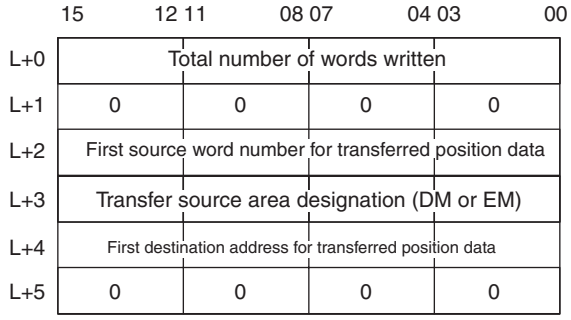 This parameter can transfer a maximum of 2,000 positions to an MC Unit at one time. It executes by specifying the address (17D6 Hex) with the first operand of the IOWR instruction. The address of the word that will be transferred is written first in DM or EM. Range: 0003 to 1770 Hex (3 to 6,000, 3 words/data item) Total number of words written Specifies the total number of words for the 1 to 2,000 positions in multiples of three since each position data item is formed from three words. First source word number for transferred position data Specifies the address of the first word in the DM or EM area storing position data that will be transferred. Transfer source area designation Specifies the DM or EM area storing position data that will be transferred. X = 0: DM area, X = 1 to D: Corresponds to banks 0 to C in the EM area First destination address for transferred position data Specifies the first destination address number in MC Unit internal RAM for the transferred position data. Range: 0000 to 07CF Hex (0 to 1999)

Address		R/W	Name	Description
MC221	MC421			
17D7 (6103)	17D7 (6103)	W	Reading position data	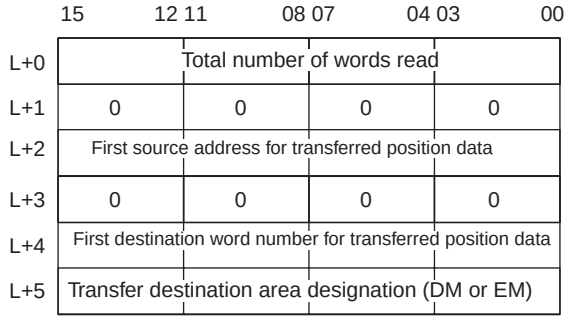 This parameter can read a maximum of 2,000 positions from an MC Unit at one time. It executes by specifying the address (17D7 Hex) with the first operand of the IOWR instruction. Data is read to DM or EM. Total number of words read Specifies the total number of words for the 1 to 2,000 positions in multiples of three since each position data item is formed from three words. Range: 0003 to 1770 Hex (3 to 6,000, 3 words/data item) First source address for transferred position data Specifies the first source address number in MC Unit internal RAM for the transferred position data. Range: 0000 to 07CF Hex (0 to 1999) First destination word number for transferred position data Specifies the first word number of the DM or EM area that will store the transferred position data. Transfer destination area designation Specifies the DM or EM area for storing position data that will be transferred. X = 0: DM area, X = 1 to D: Corresponds to banks 0 to C in the EM area
17D8 (6104)	17D8 (6104)	R/W	Specifying automatic loading	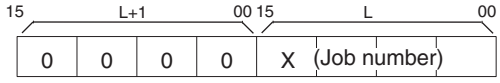 This parameter is used when batch downloading programs and position data to an MC Unit from the external memory device of a personal computer with CX-Motion. X (Job number) Specifies a job number within a range from 0001 to 2710 Hex (1 to 10,000). The following contents can be read this address using an IORD instruction. X = 0000: Power supply ON, automatic loading completed normally X = 0001 to 2710 Hex (1 to 10,000): Specified job number or executing job number
17DE (6110)	17DE (6110)	W	Presetting the X-axis present position	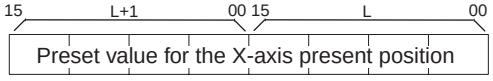 Sets the X-axis present position to any value and checks the origin. The data is 32-bit signed binary data. L+1: Leftmost 16 bits, L: Rightmost 16 bits Range: FD9DA601 to 026259FF Hex (39999999 to 39999999) The minimum setting unit is set to 2 (for 0.01), the display unit is set to 0 (for mm) and the reference origin offset is 3.99 [mm] (i.e., 399 × 0.01) if the data is 399.
17DF (6111)	17DF (6111)	W	Presetting the Y-axis present position	Sets the Y-axis present position to any value and checks the origin. The data configuration is the same as that for presetting the X-axis present position.

Address		R/W	Name	Description
MC221	**MC421**			
---	17E0 (6112)	W	Presetting the Z-axis present position	Sets the Z-axis present position to any value and checks the origin. The data configuration is the same as that for presetting the X-axis present position.
---	17E1 (6113)	W	Presetting the U-axis present position	Sets the U-axis present position to any value and checks the origin. The data configuration is the same as that for presetting the X-axis present position.
17E2 (6114)	17E2 (6114)	W	Setting the task 1 teaching address	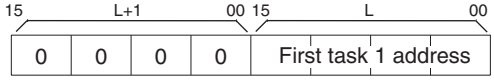 Sets the start address for task 1 teaching. Range: 0000 to 07CF Hex (1 to 1999)
17E3 (6115)	17E3 (6115)	W	Setting the task 2 teaching address	Sets the start address for task 2 teaching. The data configuration is the same as that for setting the task 1 teaching address.
---	17E4 (6116)	W	Setting the task 3 teaching address	Sets the start address for task 3 teaching. The data configuration is the same as that for setting the task 1 teaching address.
---	17EE5 (6117)	W	Setting the task 4 teaching address	Sets the start address for task 4 teaching. The data configuration is the same as that for setting the task 1 teaching address.
17E8 (6120)	17E8 (6120)	W	Override function selection (See note.)	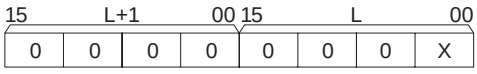 Enables or disables the override value after turning OFF the Override Setting Bit. Enable (X = 0): The set override value is enabled even after the Override Setting Bit is turned OFF, and operation proceeds with the set override value. Disable (X = 1): The override value is disabled after the Override Setting Bit is turned OFF, and operation proceeds with 100% override. The override is enabled (X = 0) when the power is turned ON.

Note The override function selection can be used only with Unit Ver. 1.15 or later, and with Units whose model number ends in -V1.

Appendix E
Control Bit/Flag Timing Charts

This appendix provides timing charts that show the operation of control bits and flags when the MC Unit is operated in Manual or Automatic. The following table lists the timing charts.

Timing Chart(s)	Control Bit(s) and Flag(s)	Page
1	Automatic/Manual Mode Bit, Cycle Start Bit, and Jogging Bit	613
2 and 3	Cycle Start Bit and Pause Bit	614
4 to 9	Cycle Start Bit and Forced Block End Bit	614
10 to 12	Cycle Start Bit, Forced Block End Bit, and Pause Bit	616
13 and 14	Automatic/Manual Mode Bit, Cycle Start Bit, and Pause Bit	617
15 and 16	Automatic/Manual Mode Bit, Cycle Start Bit, and Forced Block End Bit	617, 618
17	Cycle Start Bit, Single Block Bit, and Forced Block End Bit	618
18 and 19	Cycle Start Bit and M Code Reset Bit	618
20 and 21	Cycle Start Bit, Forced Block End Bit, M Code Reset Bit, and M code output	619
22	Automatic/Manual Mode Bit and M code output	619
23 and 24	Cycle Start Bit, Pause Bit, M Code Reset Bit, and M code output	620
25	Cycle Start Bit, Forced Block End Bit, and M code output	620
26	Cycle Start Bit, Forced Block End Bit, Task Error Flag, and Task Error Reset Bit	621
27	Cycle Start Bit, Task Error Flag, and Task Error Reset Bit	621
28	Automatic/Manual Mode Bit, Cycle Start Bit, Jogging Bit, and Manual Mode Flag	621
29	Origin Search Bit, Busy Flag, and Automatic/Manual Mode Bit	622
30 and 31	Cycle Start Bit, Forced Block End Bit, and optional input	622
32 to 34	Cycle Start Bit and optional input	623
35 to 37	Forced Block End Bit and optional input	624
38 and 39	Forced Block End Bit, M Code Reset Bit, and M code output	625
40 to 42	Pause Bit and optional input	625, 626
43	Pause Bit, M Code Reset Bit, and M code output	626
44	Optional input, M Code Reset Bit, and M code output	627

Timing Charts

1. Automatic/Manual Mode Bit, Cycle Start Bit, and Jogging Bit

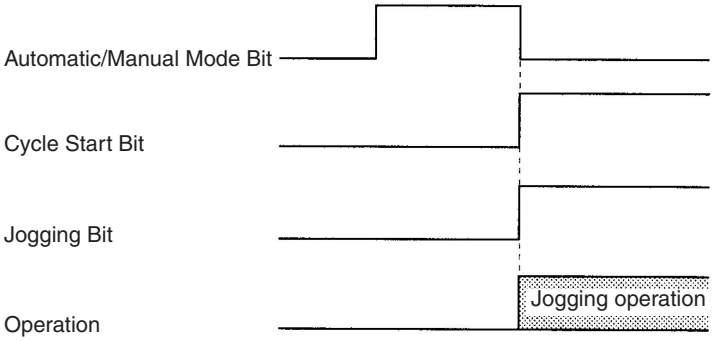

The Jogging Bit signal is received at the same time that Manual Mode is set. The Cycle Start Bit signal is ignored.

2. Cycle Start Bit and Pause Bit

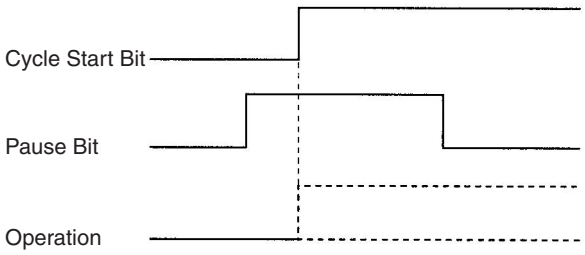

Even though the Cycle Start Bit is turned ON, MC program execution is not started because the Pause Bit is ON. Program execution will begin if the Pause Bit is turned OFF and the Cycle Start Bit is turned OFF and then ON again.

3. Cycle Start Bit and Pause Bit

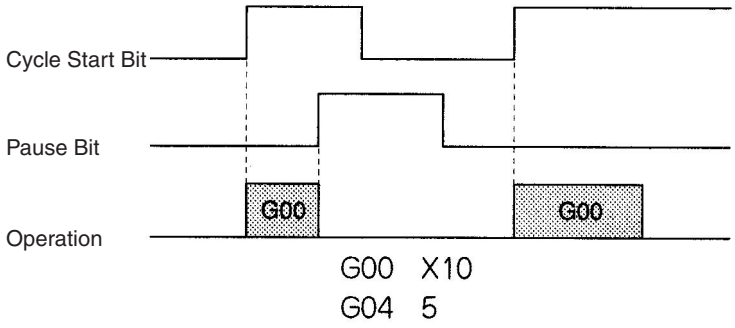

MC program execution is paused by turning ON the Pause Bit. Program execution will continue when the Pause Bit is turned OFF and the Cycle Start Bit is turned ON again.

4. Cycle Start Bit and Forced Block End Bit

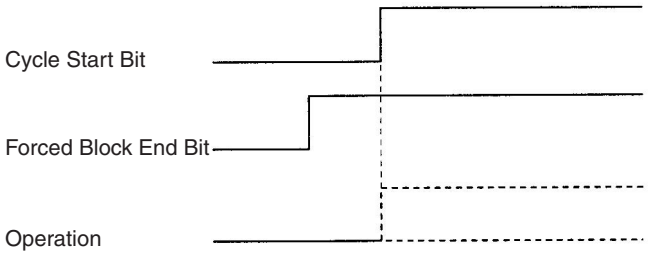

Even though the Cycle Start Bit is turned ON, MC program execution is not started because the Forced Block End Bit is ON. Operation will begin if the Forced Block End Bit is turned OFF and the Cycle Start Bit is turned OFF and then ON again.

5. Cycle Start Bit and Forced Block End Bit

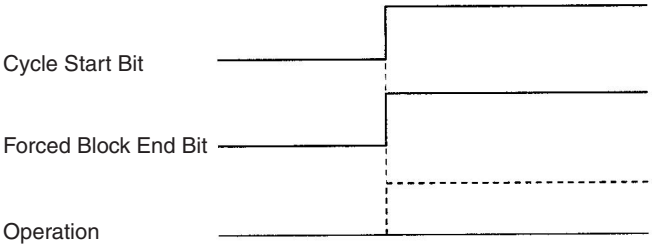

When the Cycle Start Bit and Forced Block End Bit are turned ON at the same time, the Forced Block End Bit takes precedence, so the program is not executed. Operation will begin if the Forced Block End Bit is turned OFF and the Cycle Start Bit is turned OFF and then ON again.

6. Cycle Start Bit and Forced Block End Bit

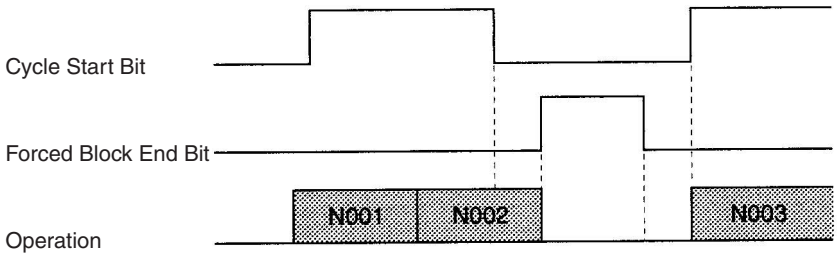

The Forced Block End Bit is turned ON at the end of block N002, but the down-differentiation of the Cycle Start Bit takes precedence, so the Forced Block End Bit is ignored. Program execution is restarted when the Cycle Start Bit is turned ON again.

7. Cycle Start Bit and Forced Block End Bit

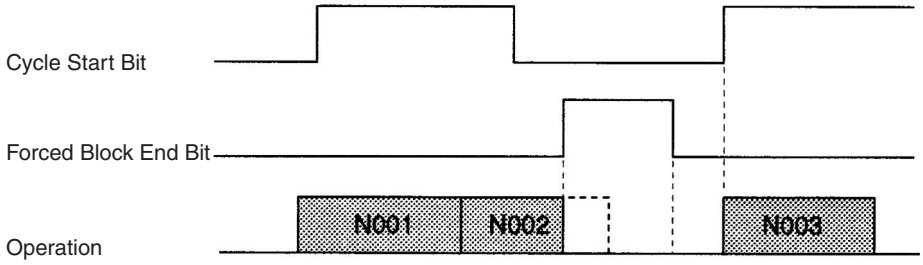

The Forced Block End Bit is turned ON to cancel execution of block N002 and stop program execution. Program execution is restarted when the Cycle Start Bit is turned ON again.

8. Cycle Start Bit and Forced Block End Bit

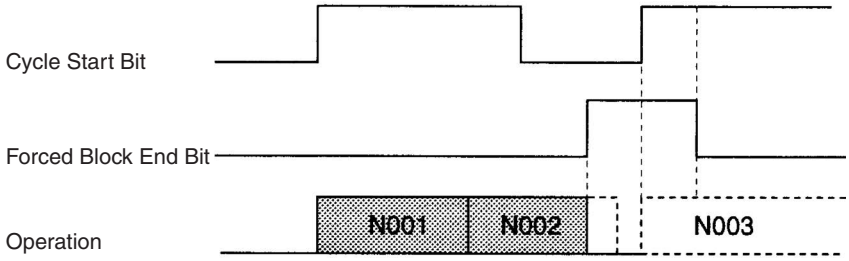

The Forced Block End Bit is turned ON to cancel execution of block N002 and stop program execution. Even though the Cycle Start Bit is turned ON again, the Forced Block End Bit is still ON, so program execution is not restarted.

9. Cycle Start Bit and Forced Block End Bit

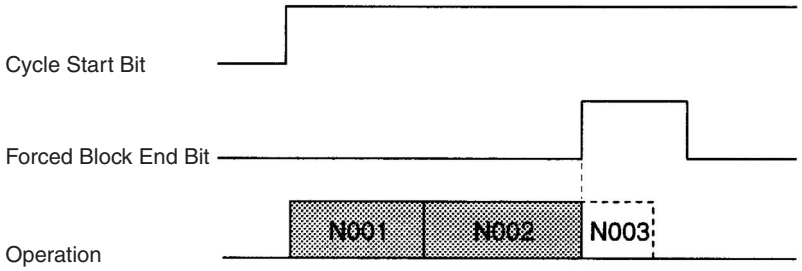

The Forced Block End Bit is turned ON between blocks N002 and N003, so execution of block N003 is cancelled and program execution is stopped.

10. Cycle Start Bit, Forced Block End Bit, and Pause Bit

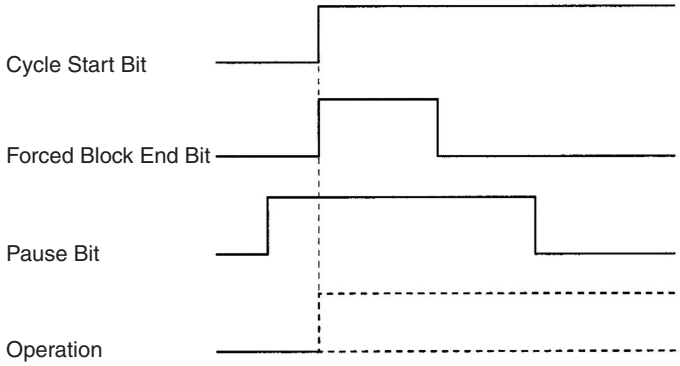

The Pause Bit is ON before the Cycle Start Bit is turned ON, so MC program execution is not started. The Forced Block End Bit is turned ON at the same time as the Cycle Start Bit, but the Pause Bit is already ON and the Forced Block End Bit has no effect.

11. Cycle Start Bit, Forced Block End Bit, and Pause Bit

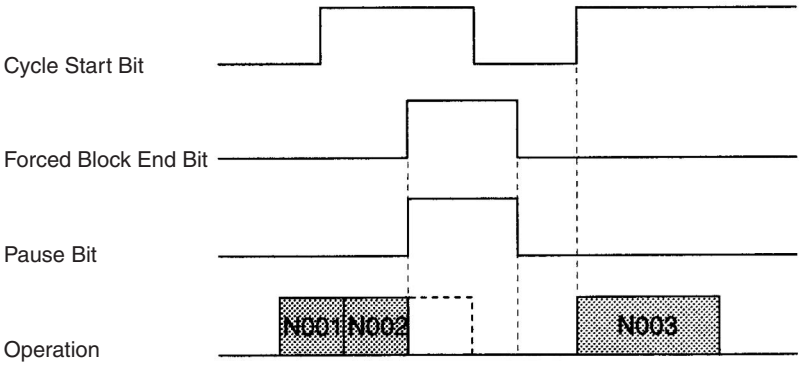

The Forced Block End Bit and Pause Bit are turned ON at the same time, but the Forced Block End Bit takes precedence, so execution of block N002 is cancelled.

12. Cycle Start Bit, Forced Block End Bit, and Pause Bit

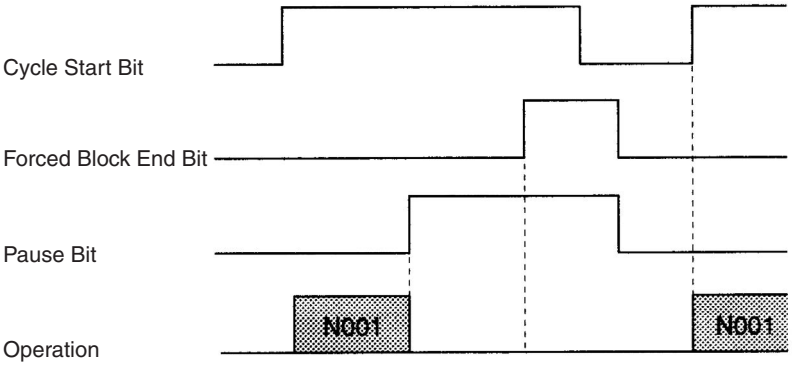

Program execution is paused with the Pause Bit. The Forced Block End Bit signal is ignored. Program execution will continue when the Cycle Start Bit is turned ON again.

13. Automatic/Manual Mode Bit, Cycle Start Bit, and Pause Bit

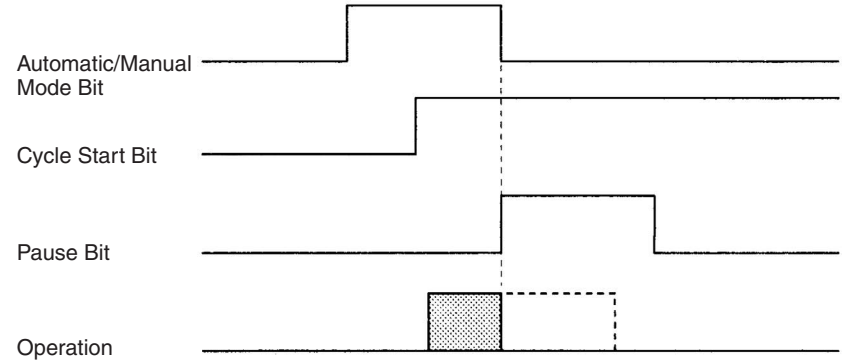

Program execution is stopped when the Automatic/Manual Mode Bit is turned OFF. The Unit is in Manual Mode, so the Pause Bit is ignored.

14. Automatic/Manual Mode Bit, Cycle Start Bit, and Pause Bit

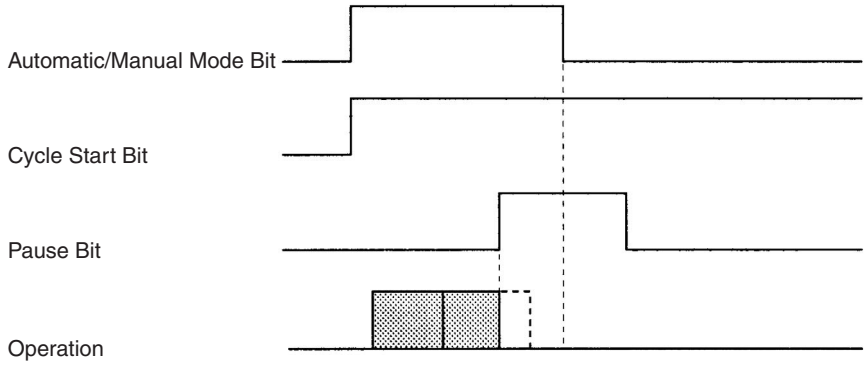

After program execution is paused with the Pause Bit, the Unit is switched to Manual Mode by turning OFF the Automatic/Manual Mode Bit.

15. Automatic/Manual Mode Bit, Cycle Start Bit, and Forced Block End Bit

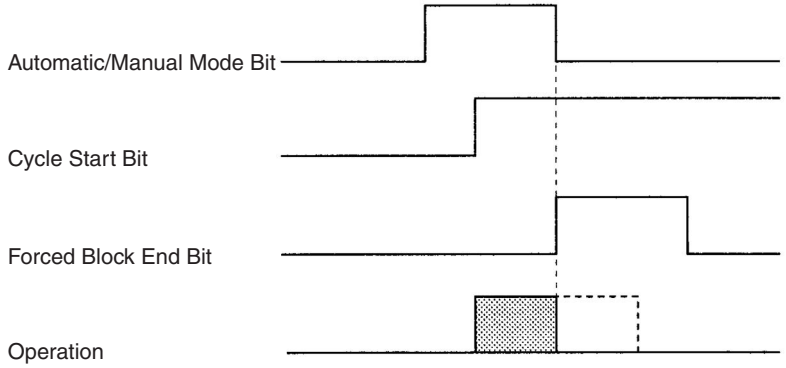

Program execution is stopped by turning OFF the Automatic/Manual Mode Bit. The Forced Block End Bit is ignored.

16. Automatic/Manual Mode Bit, Cycle Start Bit, and Forced Block End Bit

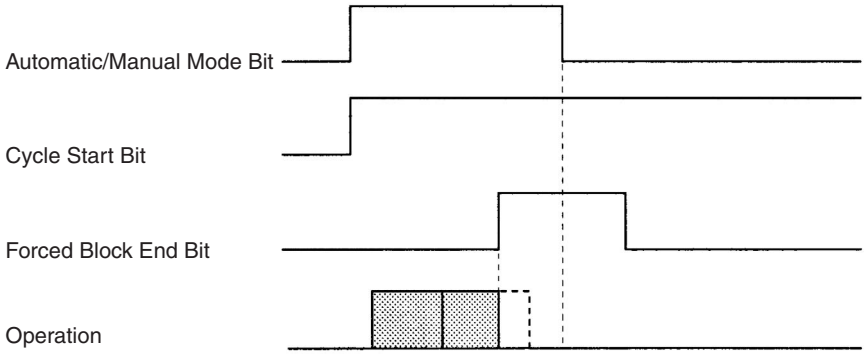

Program execution is stopped by the Forced Block End Bit. The Unit is switched to Manual Mode when the Automatic/Manual Mode Bit is turned OFF.

17. Cycle Start Bit, Single Block Bit, and Forced Block End Bit

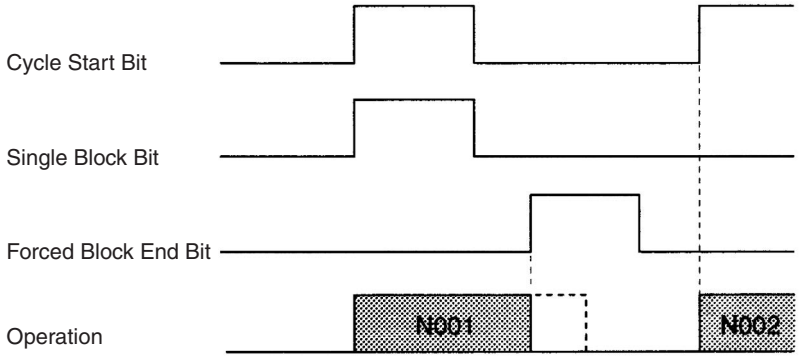

Program execution is started with the Single Block Bit ON, but execution of block N001 is stopped by the Forced Block End Bit. The next block is executed when the Cycle Start Bit is turned ON again.

18. Cycle Start Bit and M Code Reset Bit

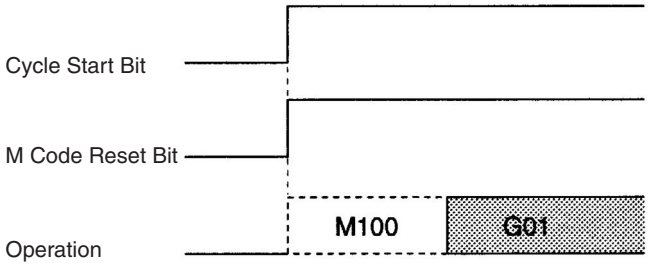

Program execution is started by the Cycle Start Bit. The next operation (G01) is executed without outputting M code 100 because the M Code Reset Bit is ON.

19. Cycle Start Bit and M Code Reset Bit

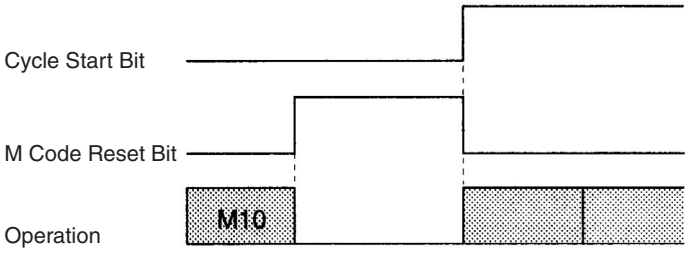

The Cycle Start Bit is invalid while the Unit is waiting for an M code reset. When the M Code Reset BIt is turned OFF, the standby status is cleared and the status of the Cycle Start Bit is checked. The Cycle Start Bit is ON, so program execution is restarted.

20. Cycle Start Bit, Forced Block End Bit, M Code Reset Bit, and M Code Output

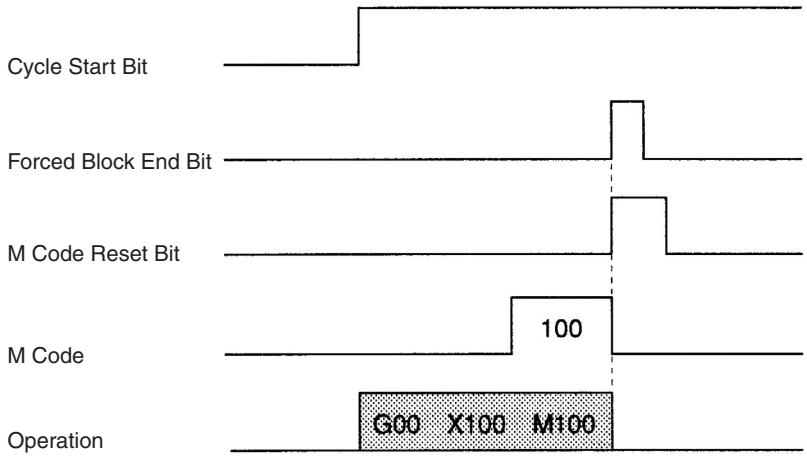

The Forced Block End Bit takes precedence and stops program execution when the Forced Block End Bit and the M Code Reset BIt are turned ON at the same time. The M code is cleared when the program is stopped. The program was already stopped, so program execution is not restarted when the M Code Reset Bit is turned OFF.

21. Cycle Start Bit, Forced Block End Bit, M Code Reset Bit, and M Code Output

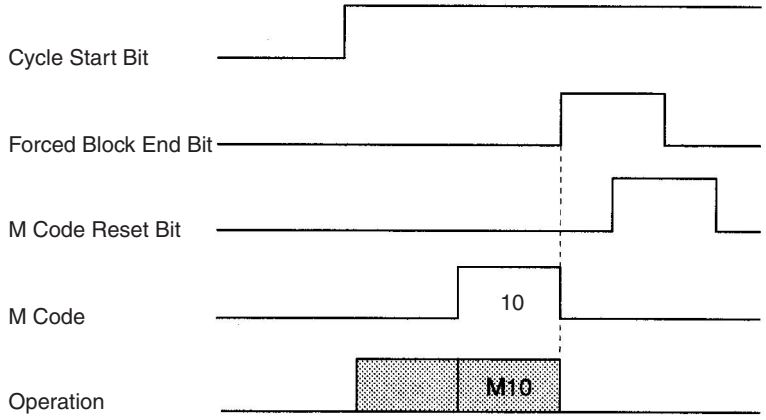

The program is stopped and the M code is cleared when the Forced Block End Bit goes ON.

22. Automatic/Manual Mode Bit and M Code Output

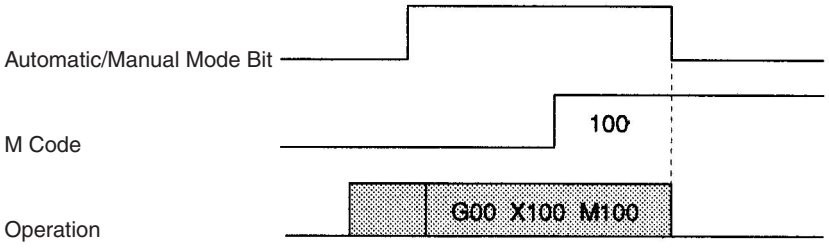

The M code is not cleared when the Unit is switched to Manual Mode.

23. Cycle Start Bit, Pause Bit, M Code Reset Bit, and M Code Output

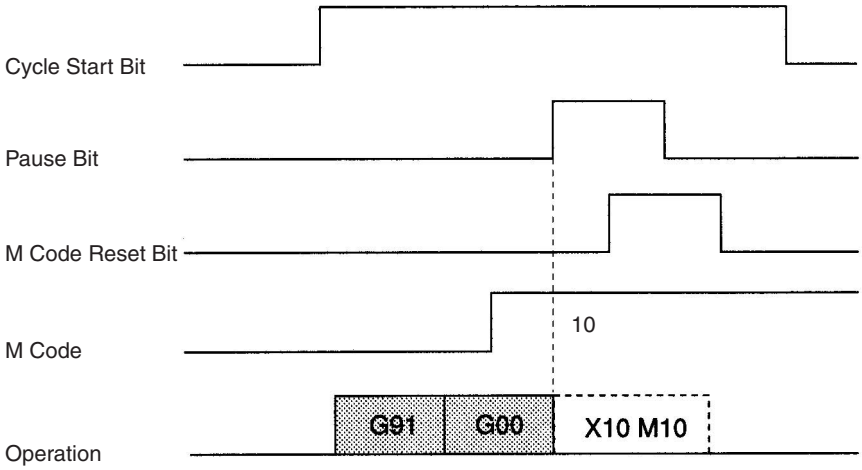

The program is paused when the Pause Bit is turned ON, but the M code is not cleared. M code M10 is not cleared by the M Code Reset Bit because program execution is paused.

24. Cycle Start Bit, Pause Bit, M Code Reset Bit, and M Code Output

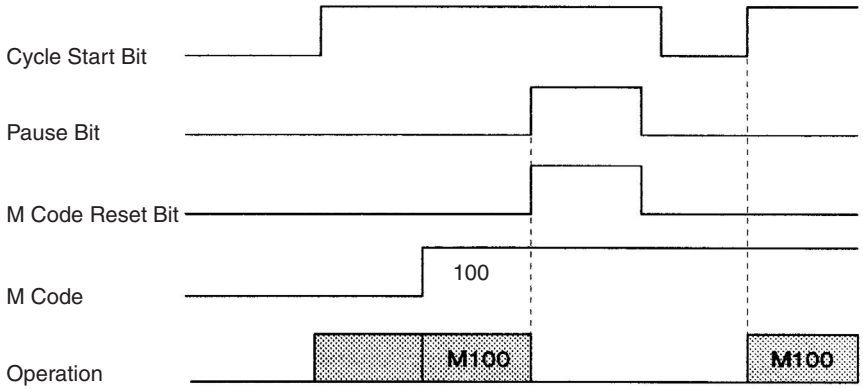

If the Pause Bit and M Code Reset Bit are turned ON at the same time, the Pause Bit becomes valid. Program execution is paused, but the M code is not cleared. When the program is restarted, the M code will be output because it was ON originally.

25. Cycle Start Bit, Forced Block End Bit, and M Code Output

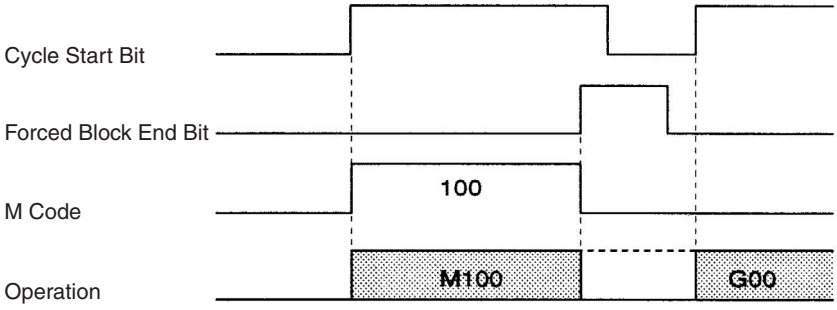

The Forced Block End Bit is turned ON while the Unit is standing by for an M code reset, cancelling the block.

26. Cycle Start Bit, Forced Block End Bit, Task Error Flag, and Task Error Reset Bit

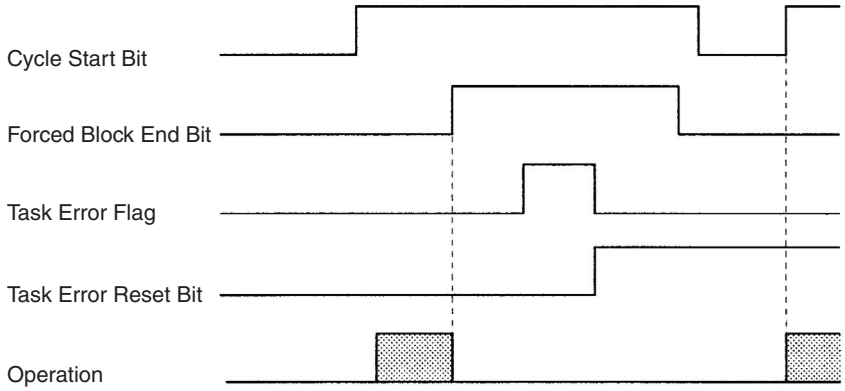

Operation is stopped with the Forced Block End Bit and then a task error occurs. Correct the cause of the error, clear the error by turning ON the Task Error Reset Bit, and restart the program by toggling the Cycle Start Bit.

27. Cycle Start Bit, Task Error Flag, and Task Error Reset Bit

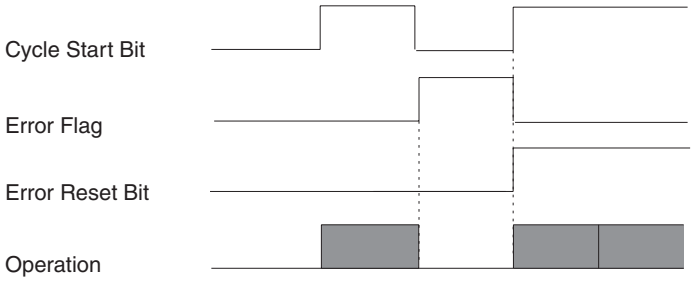

After a task error occurs, the Task Error Reset Bit and Cycle Start Bit are turned ON at the same time, clearing the error and restarting operation simultaneously.

28. Automatic/Manual Mode Bit, Cycle Start Bit, Jogging Bit, and Manual Mode Flag

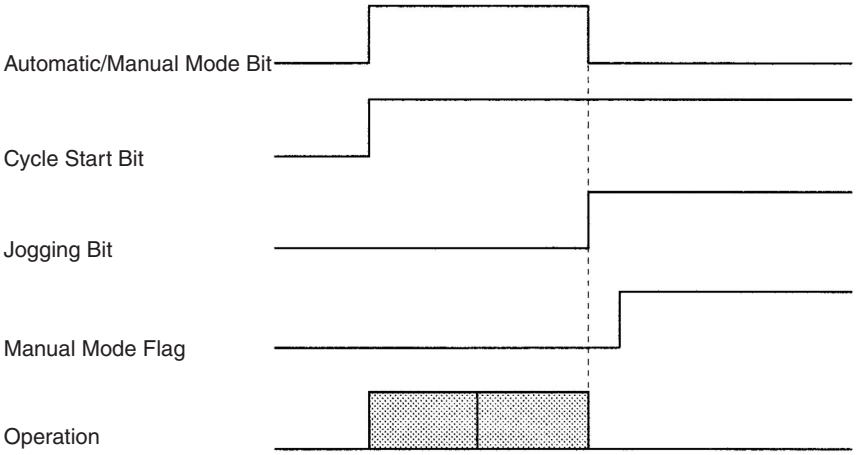

The Automatic/Manual Mode Bit is turned OFF while the program is being executed, switching the Unit to Manual Mode. Switching to Manual Mode causes the program to stop and axes to decelerate to a stop, but the Manual Mode Flag is OFF while the axes are decelerating so the Jogging Bit signal is invalid.

The Manual Mode Flag will be turned ON when positioning is completed after decelerating to a stop. The Jogging Bit signal can be received once the Manual Mode Flag is ON.

29. Origin Search Bit, Busy Flag, and Automatic/Manual Mode Bit

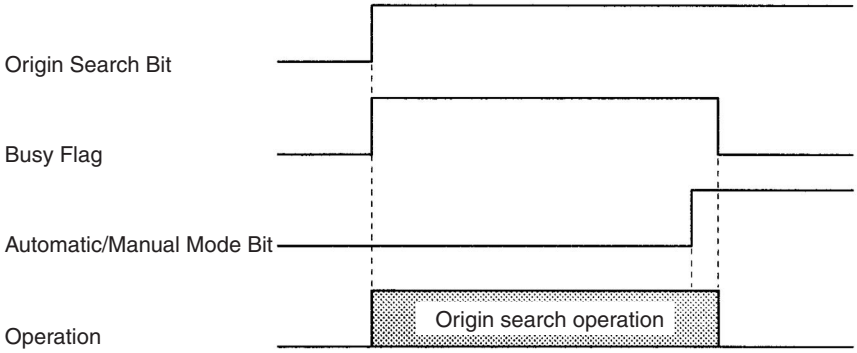

The Manual Mode origin search is stopped when the Automatic/Manual Mode Bit is turned ON. All axes in the task are stopped and the Unit enters Automatic Mode. At this point, the Busy Flags for all of the axes will be OFF, even though the Origin Search Bit remains ON.

30. Cycle Start Bit, Forced Block End Bit, and Optional Input

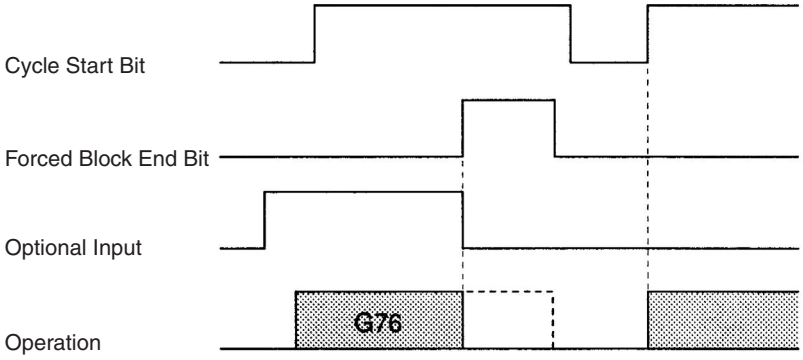

While the OPTIONAL PROGRAM STOP command (G76) is being executed, the block is cancelled by turning ON the Forced Block End Bit. The optional input is turned OFF at the same time that the Forced Block End Bit is turned ON, so in the end the input has no effect.

31. Cycle Start Bit, Forced Block End Bit, and Optional Input

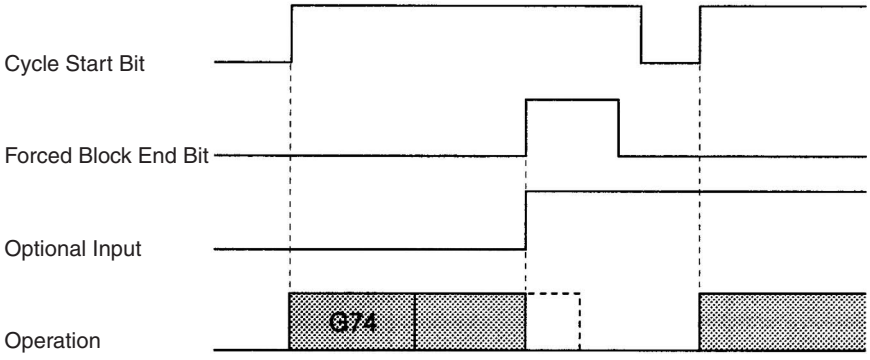

While the block after the OPTIONAL END command (G74) is being executed, the block is cancelled by turning ON the Forced Block End Bit. The optional input and Forced Block End Bit are turned ON at the same time, but the Forced Block End Bit takes precedence.

32. Cycle Start Bit and Optional Input

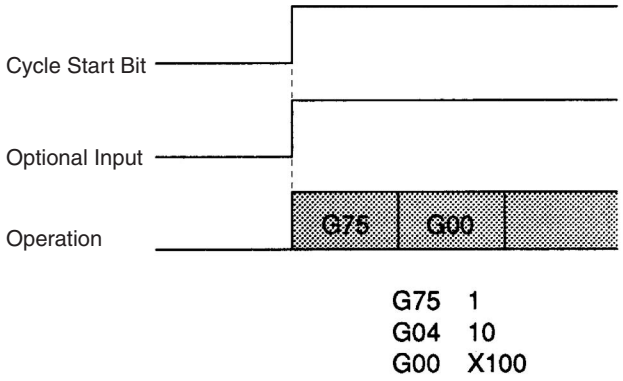

Program execution starts when the Cycle Start Bit is turned ON. The next block after the OPTIONAL SKIP command (G75) is skipped because the optional input is ON.

33. Cycle Start Bit and Optional Input

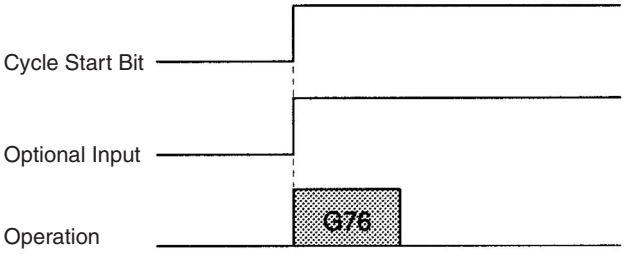

Program execution starts when the Cycle Start Bit is turned ON. The status of the optional input is checked when the OPTIONAL PROGRAM STOP command (G76) is executed, and the program is stopped because the optional input is ON.

34. Cycle Start Bit and Optional Input

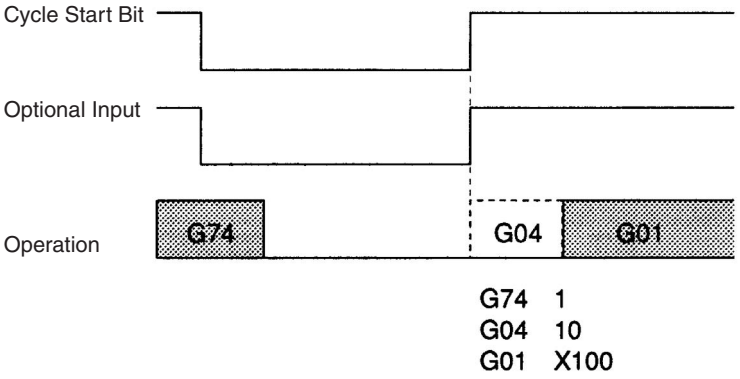

Program execution is restarted when the Cycle Start Bit is turned ON. The status of the optional input is read due to the execution of the OPTIONAL END command (G74) and G04 is cancelled.

35. Forced Block End Bit and Optional Input

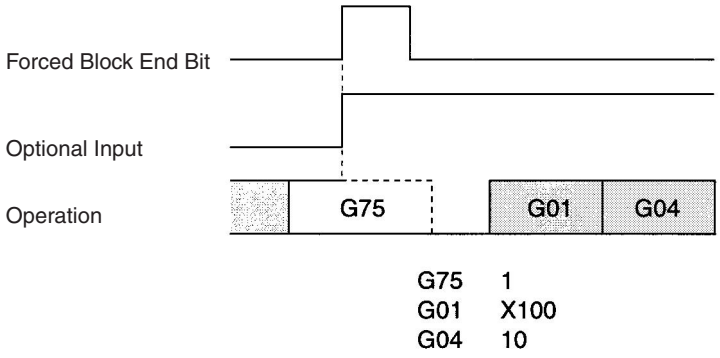

When the Forced Block End Bit and the optional input are turned ON at the same time, the Forced Block End Bit takes precedence, and the OPTIONAL SKIP command (G75) is forcibly stopped and becomes invalid. When the program is restarted, the optional input is turned ON, but G01 is not skipped.

36. Forced Block End Bit and Optional Input

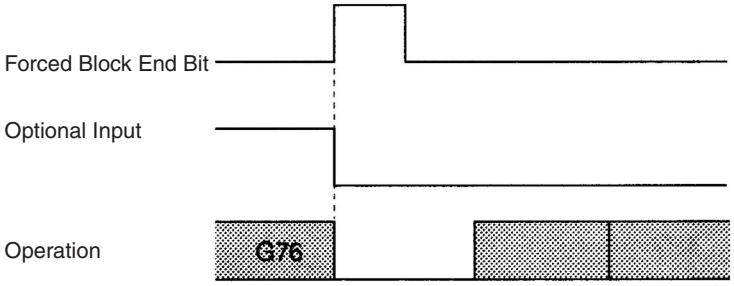

The OPTIONAL PROGRAM STOP command (G76) is cancelled by the Forced Block End Bit. The optional input is turned OFF at the same time, but this is ignored and program execution is stopped.

37. Forced Block End Bit and Optional Input

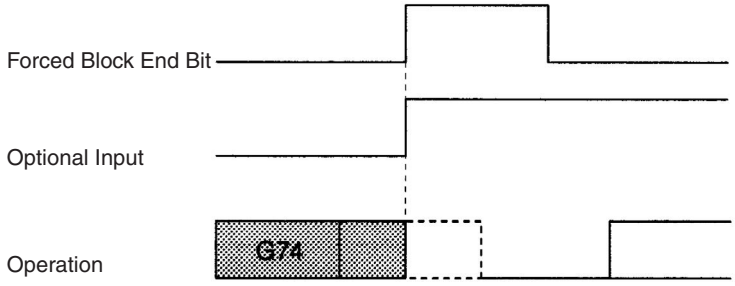

The Forced Block End Bit takes precedence if it is turned ON at the same time as the optional input in the block after an OPTIONAL END command (G74). The Unit stands by for restarting after program execution is stopped.

38. Forced Block End Bit, M Code Reset Bit, and M Code Output

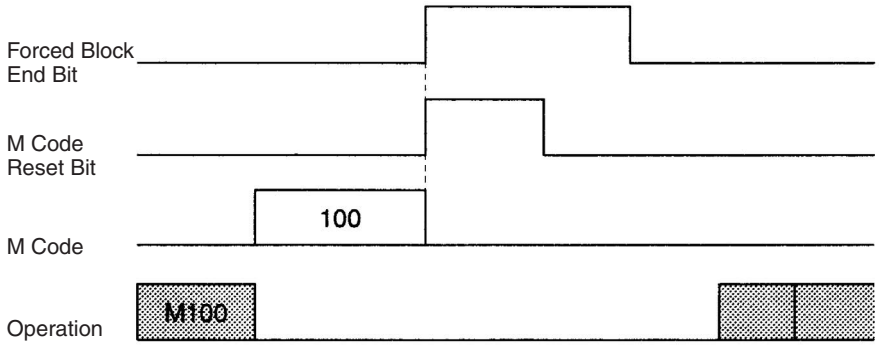

Turning ON the Forced Block End Bit clears the M code and stops program execution. The M Code Reset Bit signal is ignored.

39. Forced Block End Bit, M Code Reset Bit, and M Code Output

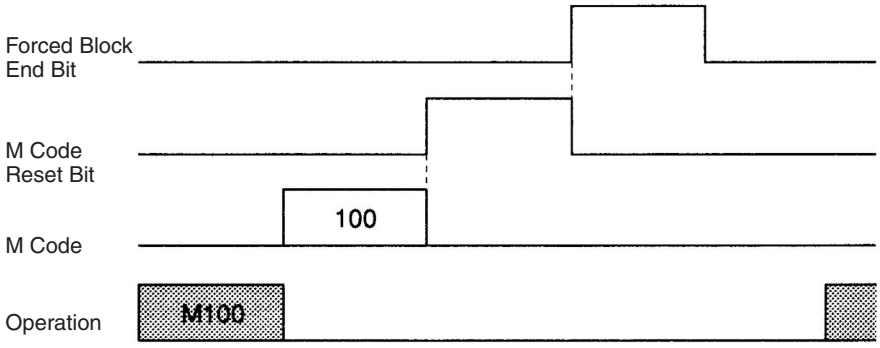

Turning ON the Forced Block End Bit cancels the M100 block waiting for an M code reset. The down-differentiation of the M Code Reset Bit is ignored.

40. Pause Bit and Optional Input

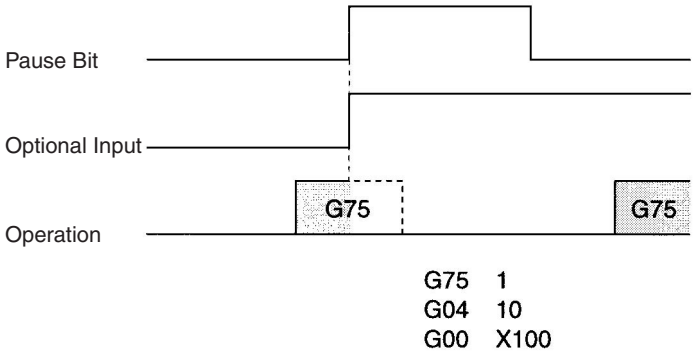

Operation is stopped if the Pause Bit is turned ON during execution of the OPTIONAL SKIP command (G75). The optional input is ignored.

41. Pause Bit and Optional Input

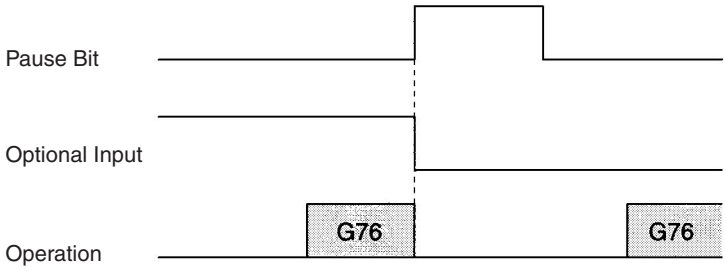

Execution of the OPTIONAL STOP command (G76) is stopped when the Pause Bit is turned ON. Even if the optional input is turned OFF at the same time, it is ignored. G76 is executed again when the program is restarted.

42. Pause Bit and Optional Input

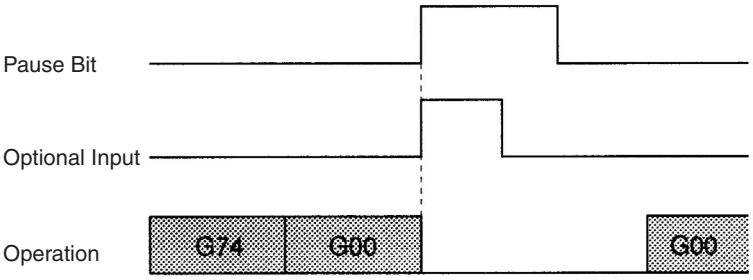

The G00 positioning operation is stopped by turning ON the Pause Bit in the block after the OPTIONAL END command (G74). The optional input is ignored even if it goes OFF at the same time. (The program is not ended.) Execution of command G00 is continued when the program is restarted.

43. Pause Bit, M Code Reset Bit, and M Code Output

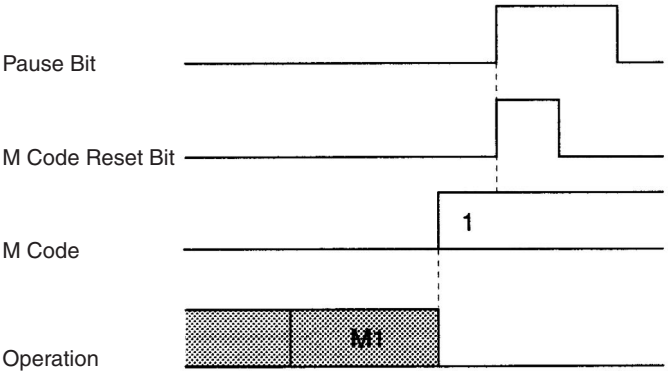

The program is stopped by the Pause Bit. The M Code Reset Bit is ignored, so the M code is not cleared.

44. Optional Input, M Code Reset Bit, and M Code Output

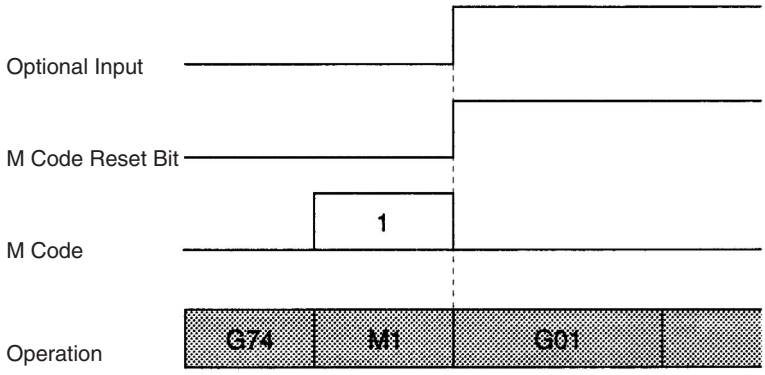

The M code command in the block after the OPTIONAL END command (G74) is stopped by the optional input. The M code is cleared and the next block is executed immediately. The M Code Reset Bit is ignored.

Appendix F
Origin Search Patterns

This appendix provides origin search patterns with the origin search method set to Reverse Mode or One-direction Mode. Operation will vary depending on the position of the workpiece when the origin search is executed. Even if the search direction is set to the + direction (i.e., CW), if the initial origin search direction is opposite to the phase-Z detection direction, the origin search will be performed in the CCW direction. For operation details, refer to *SECTION 9 Establishing the Origin*.

Reverse-mode Origin Search 1

This origin search is performed with an origin proximity signal input, and both phase-Z detection direction and initial origin search direction set to CW.

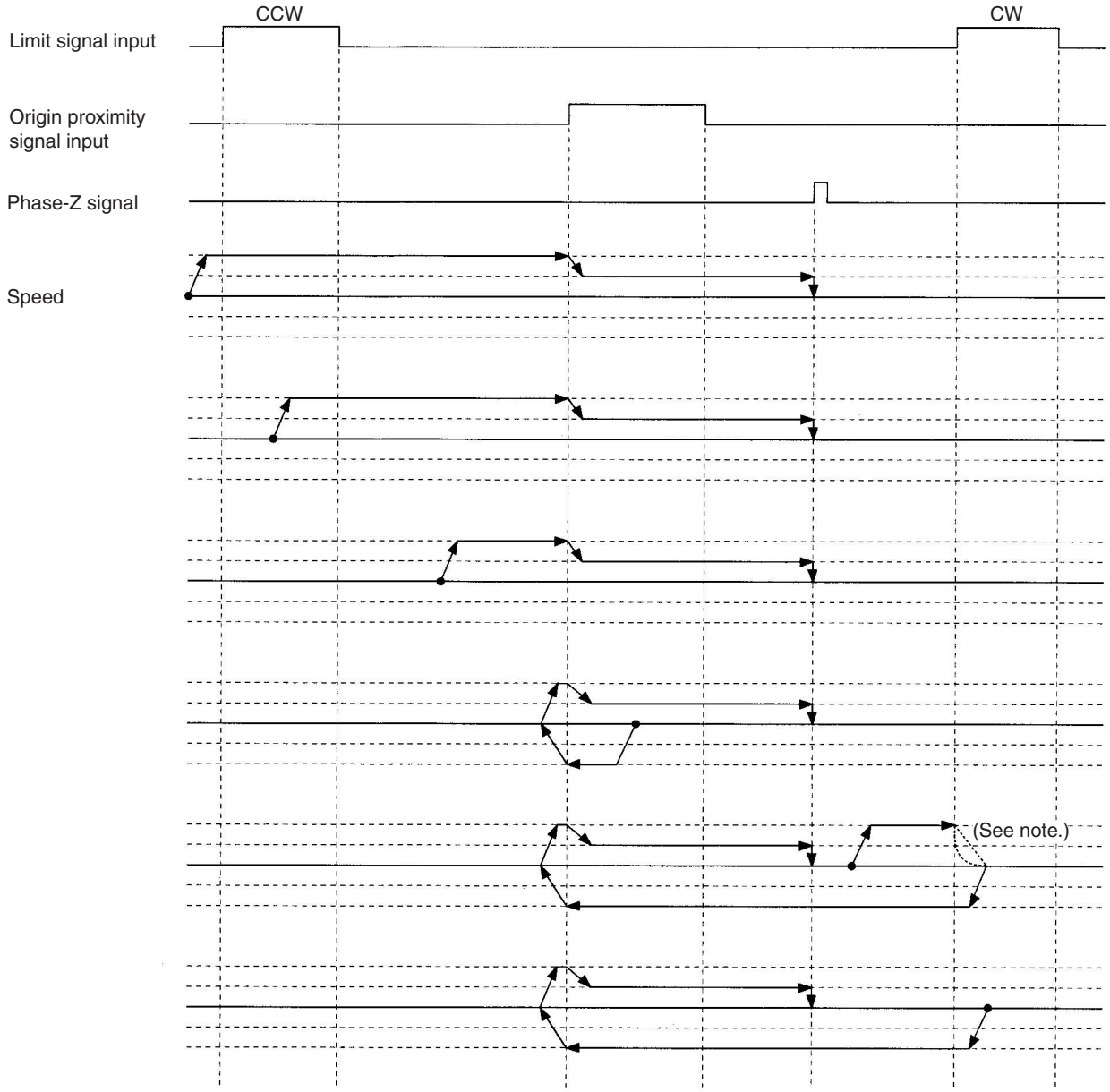

Note Operation will vary depending on the setting of the limit signal input.

Reverse-mode Origin Search 2

This origin search is performed with an origin proximity signal input, and both phase-Z detection direction and initial origin search direction set to CW.

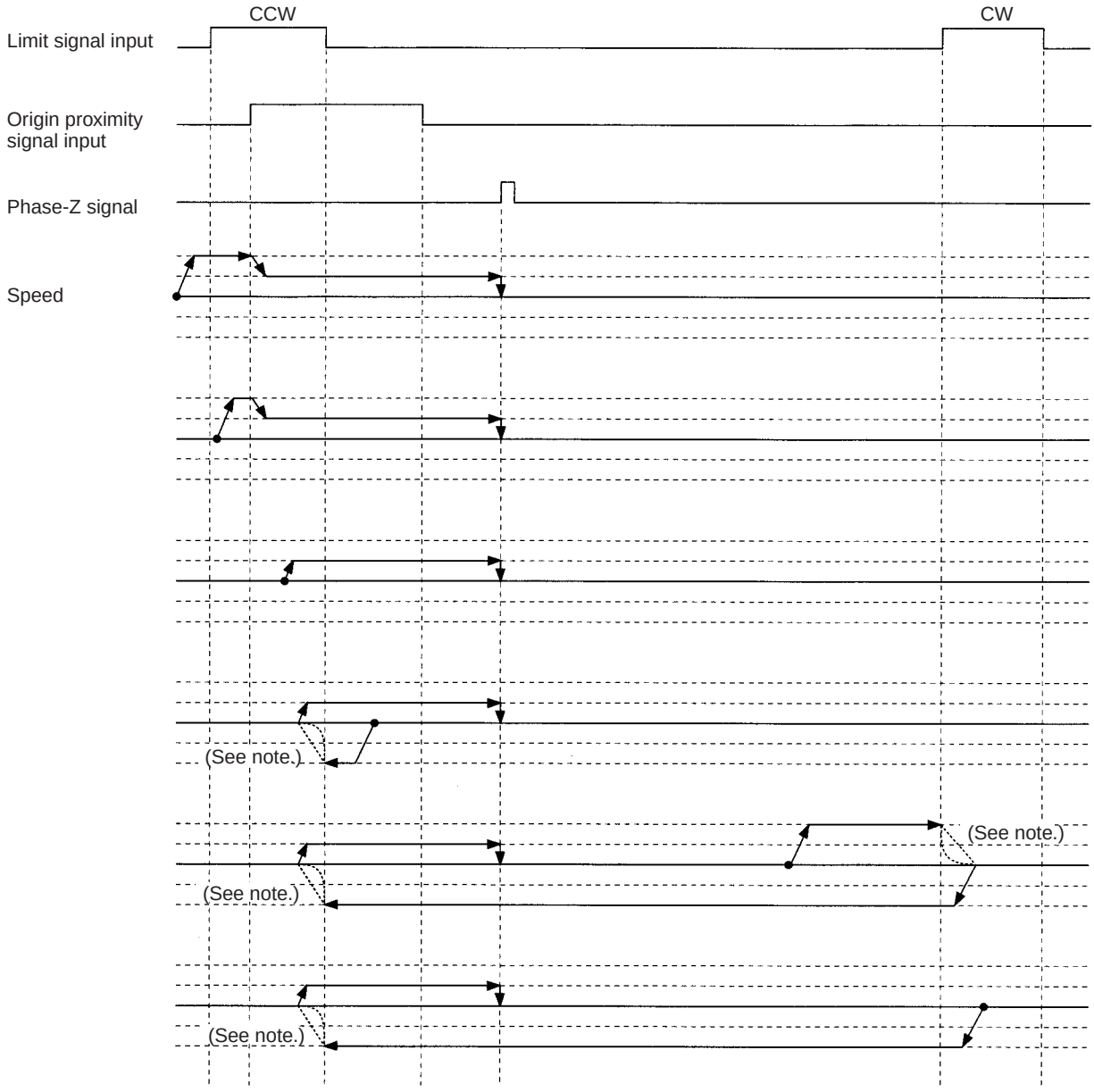

Note Operation will vary depending on the setting of the limit signal input.

Reverse-mode Origin Search 3

This origin search is performed with an origin proximity signal input, and both phase-Z detection direction and initial origin search direction set to CW.

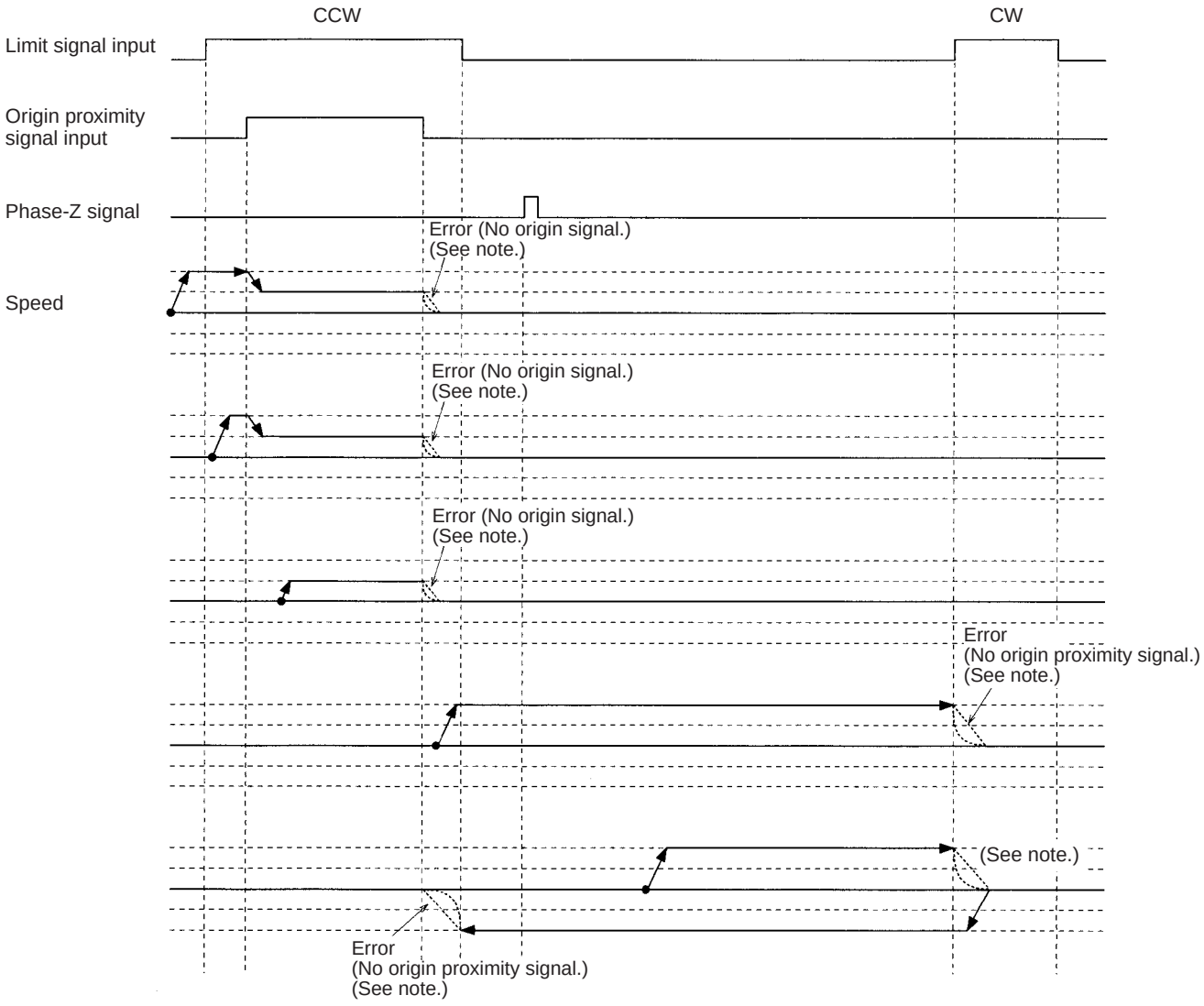

Note Operation will vary depending on the setting of the limit signal input.

Reverse-mode Origin Search 4

This origin search is performed with an origin proximity signal input, and both phase-Z detection direction and initial origin search direction set to CW.

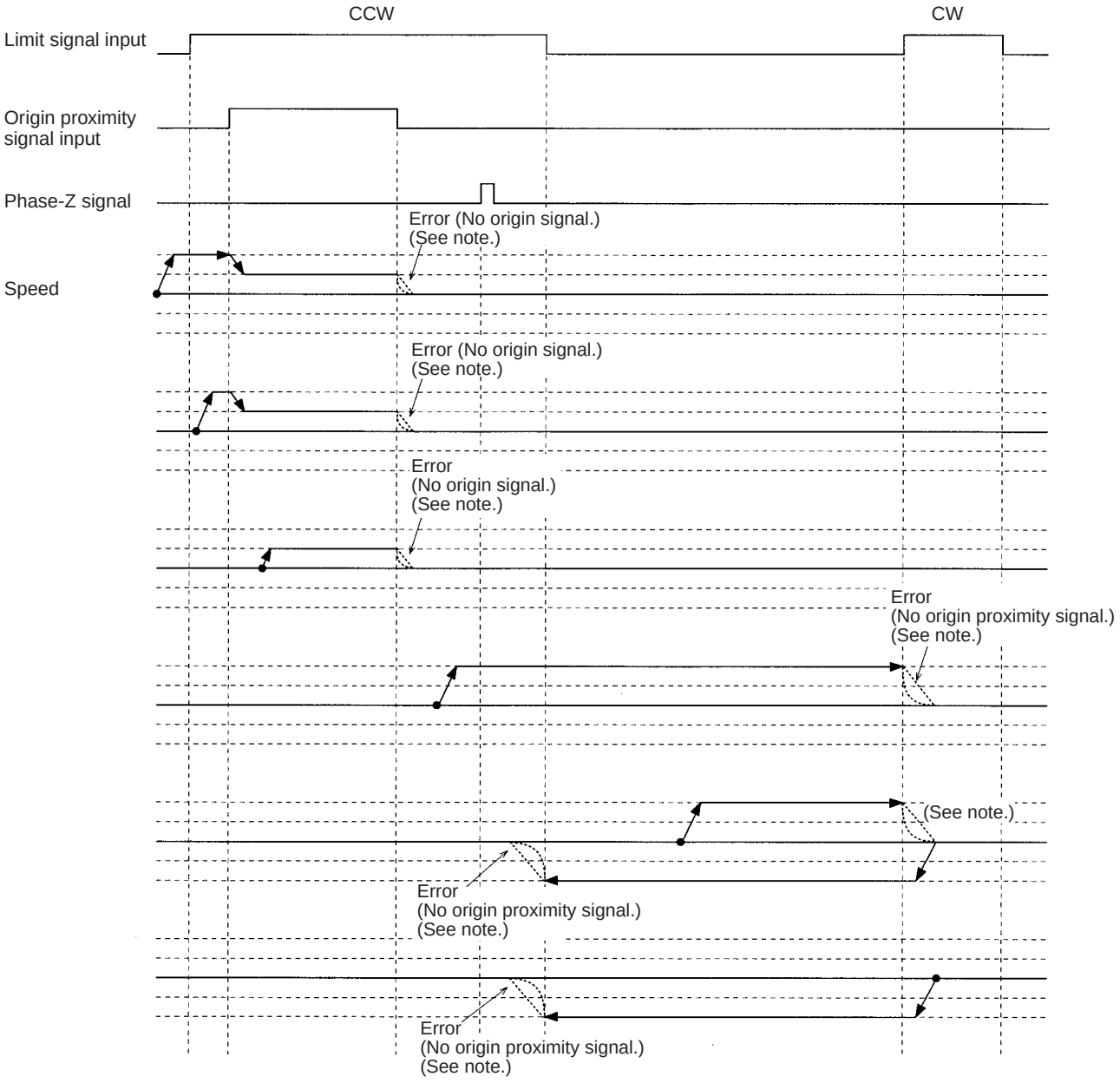

Note Operation will vary depending on the setting of the limit signal input.

Reverse-mode Origin Search 5

This origin search is performed with an origin proximity signal input, and both phase-Z detection direction and initial origin search direction set to CW.

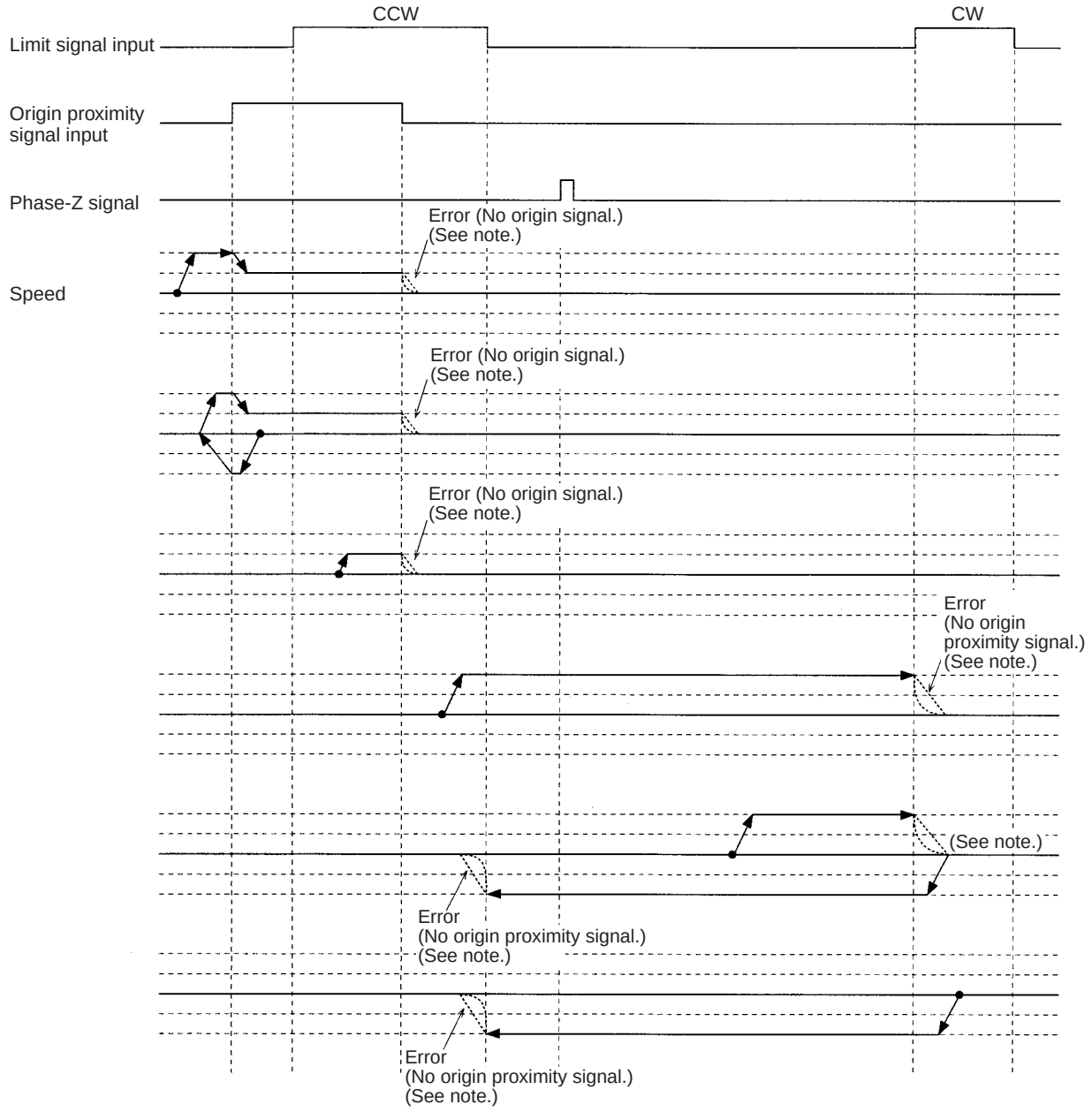

Note Operation will vary depending on the setting of the limit signal input.

Reverse-mode Origin Search 6

This origin search is performed with an origin proximity signal input, and both phase-Z detection direction and initial origin search direction set to CW.

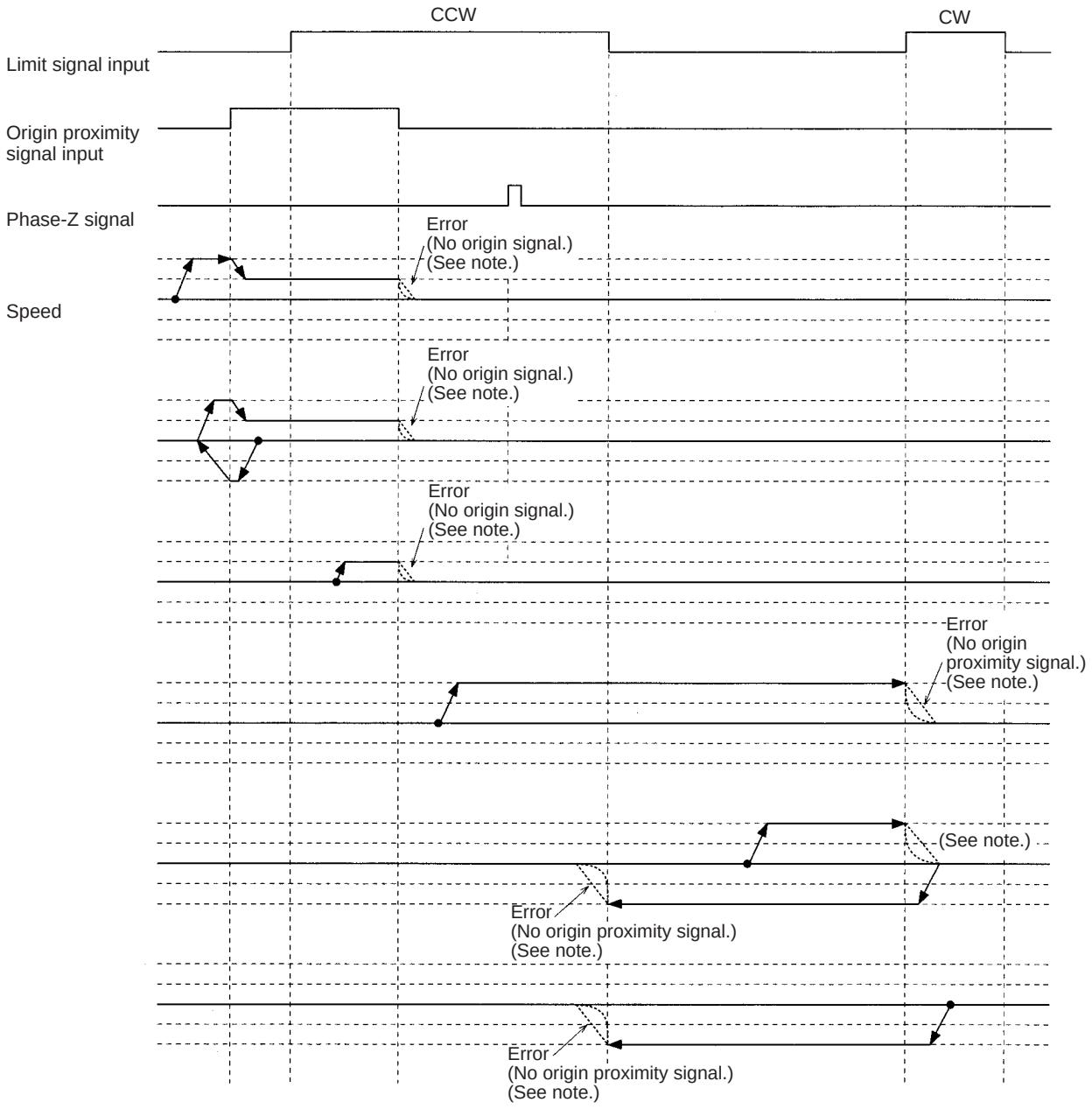

Note Operation will vary depending on the setting of the limit signal input.

Reverse-mode Origin Search 7

This origin search is performed with an origin proximity signal input, and both phase-Z detection direction and initial origin search direction set to CW.

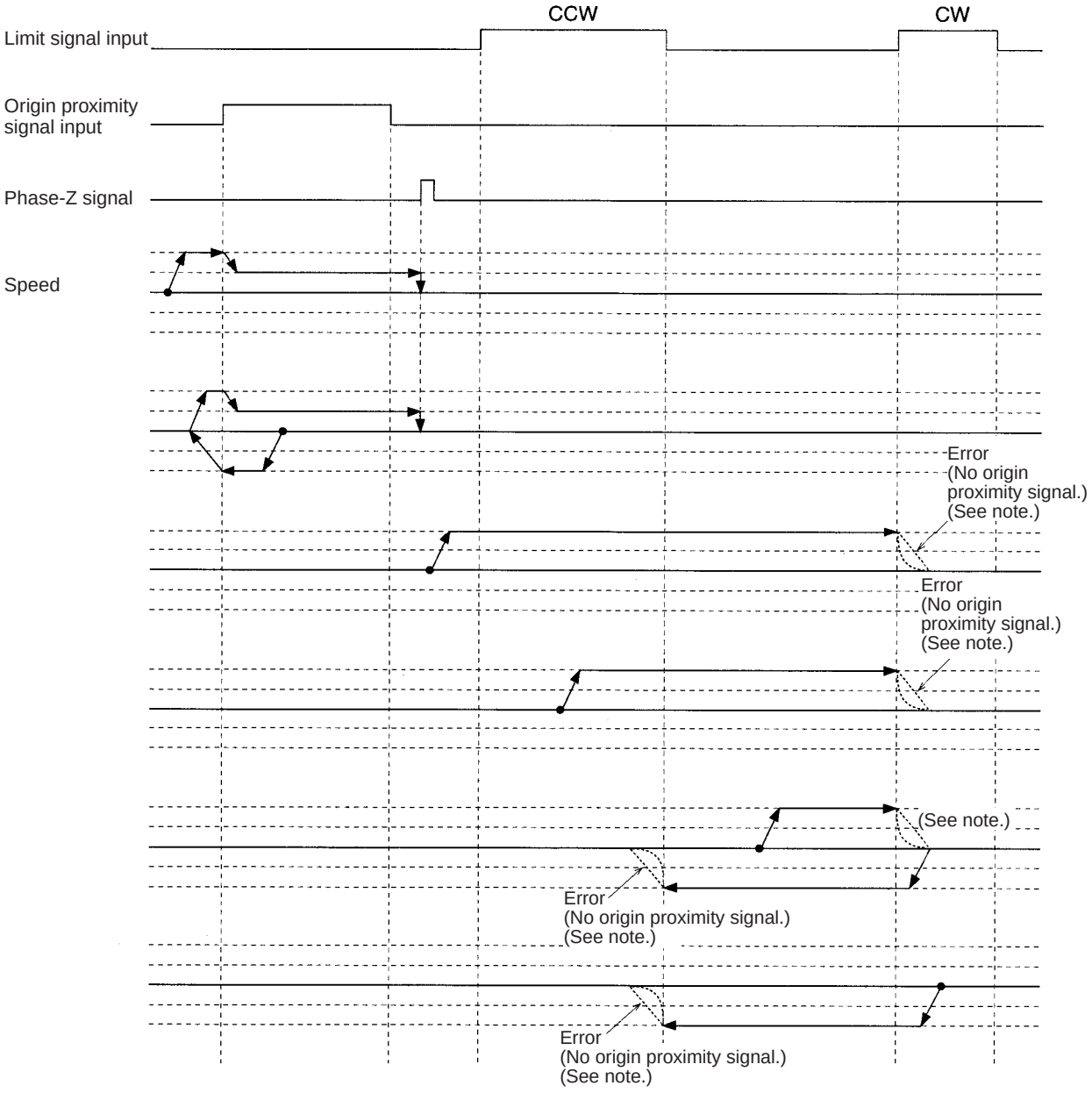

Note Operation will vary depending on the setting of the limit signal input.

Reverse-mode Origin Search 8

This origin search is performed with an origin proximity signal input, and both phase-Z detection direction and initial origin search direction set to CW.

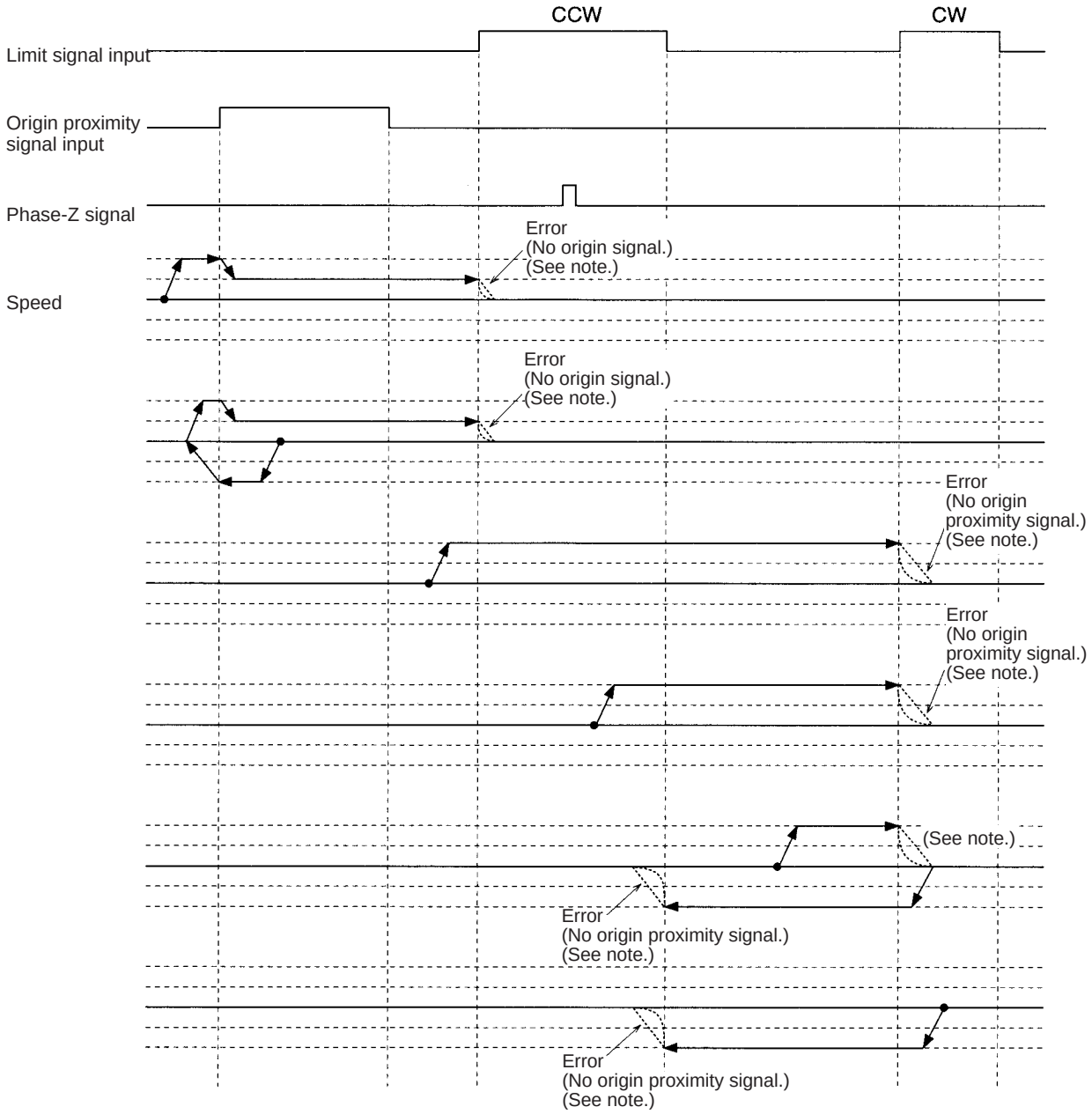

Note Operation will vary depending on the setting of the limit signal input.

Reverse-mode Origin Search 9

This origin search is performed with an origin proximity signal, and both phase-Z detection direction and initial origin search direction set to CW with no phase-Z signal input.

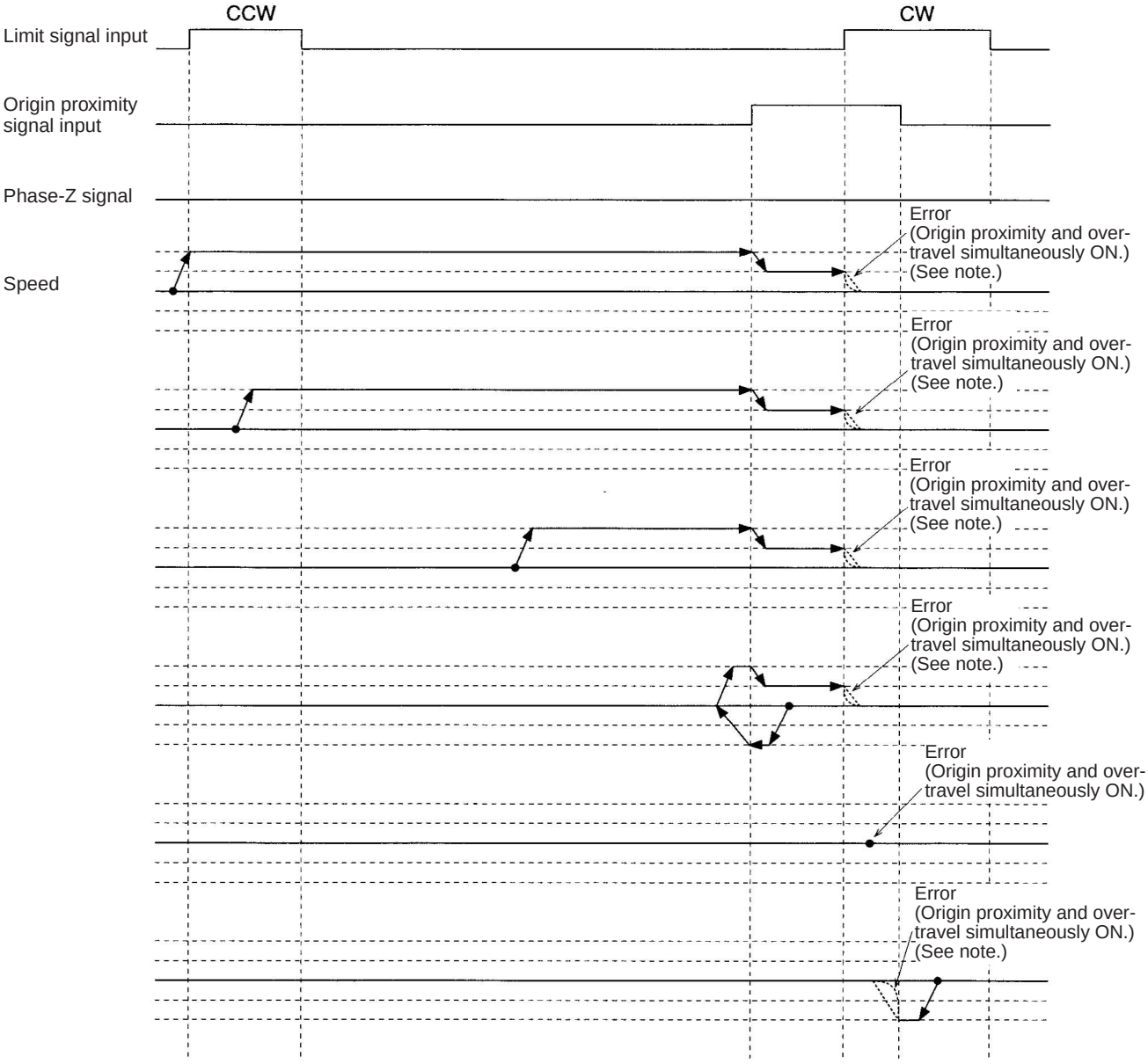

Note Operation will vary depending on the setting of the limit signal input.

Reverse-mode Origin Search 10

This origin search is performed with an origin proximity input, and both phase-Z detection direction and initial origin search direction set to CW with no phase-Z signal input.

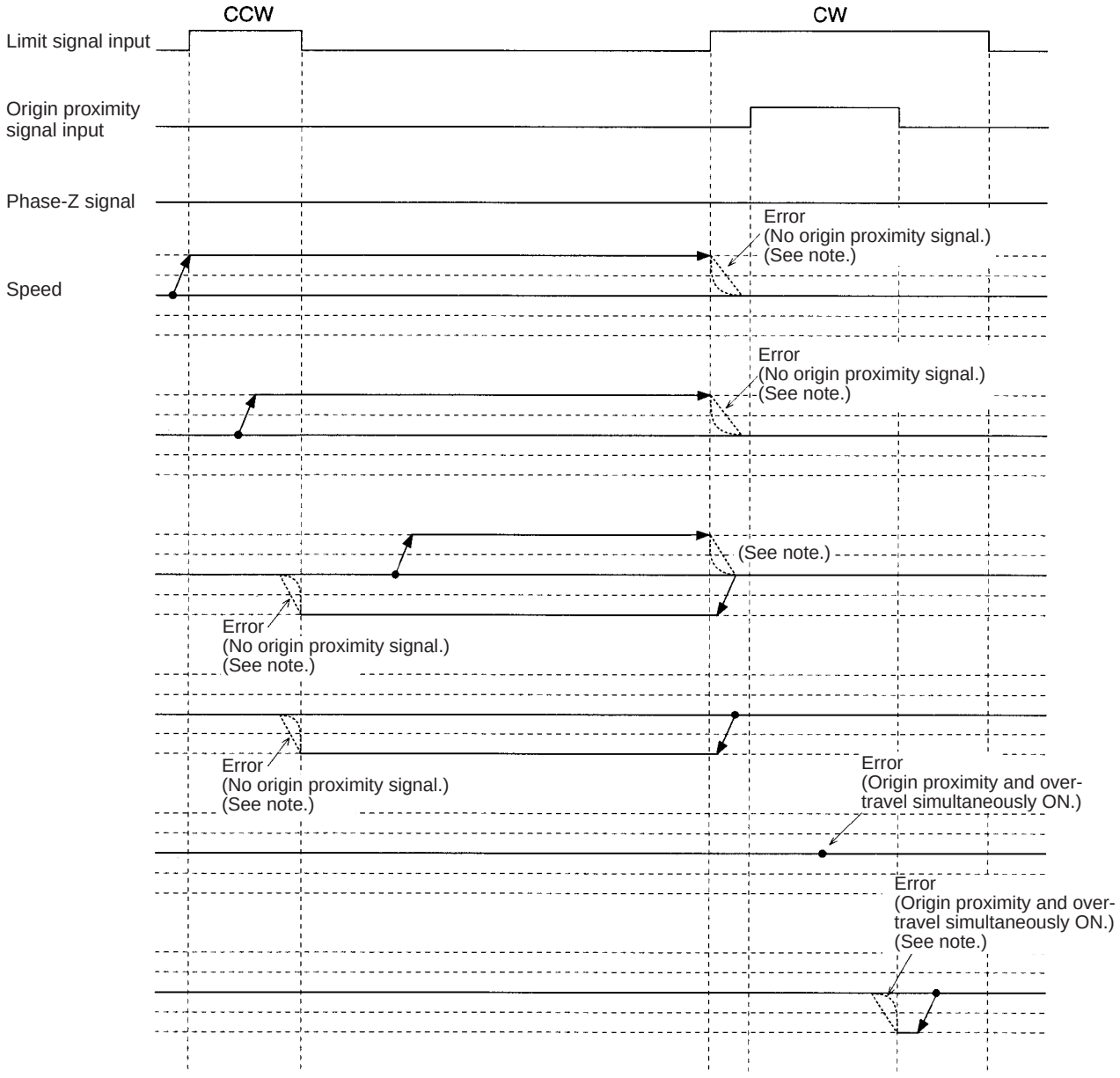

Note Operation will vary depending on the setting of the limit signal input.

Reverse-mode Origin Search 11

This origin search is performed with an origin proximity signal input, and both phase-Z detection direction and initial origin search direction set to CW with no phase-Z signal input.

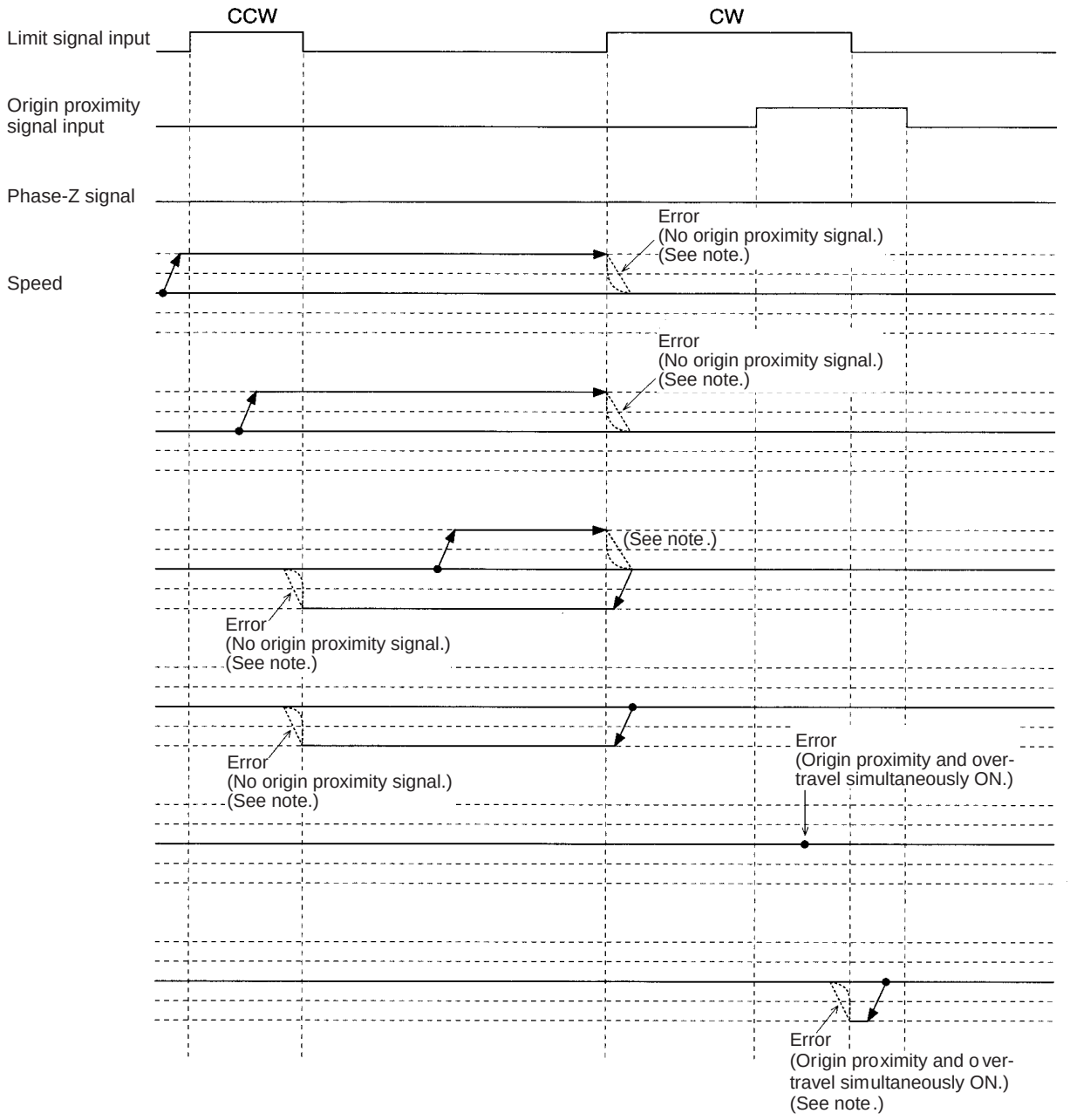

Note Operation will vary depending on the setting of the limit signal input.

Reverse-mode Origin Search 12

This origin search is performed with an origin proximity signal input, and both phase-Z detection direction and initial origin search direction set to CW.

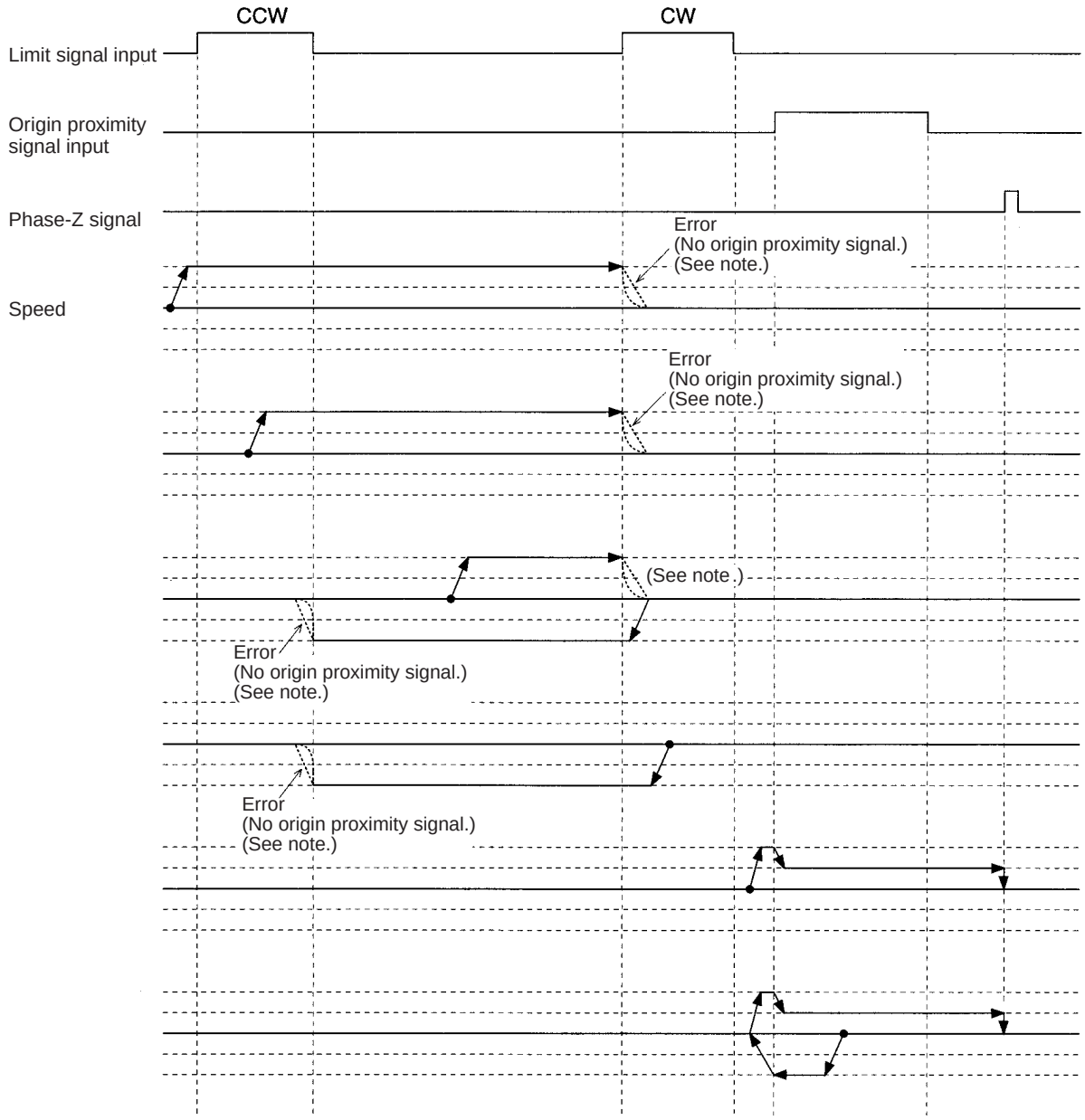

Note Operation will vary depending on the setting of the limit signal input.

If the ON range for the CW limit signal input is small, when the interval between it and the origin proximity signal input is short, an error will result as shown below.

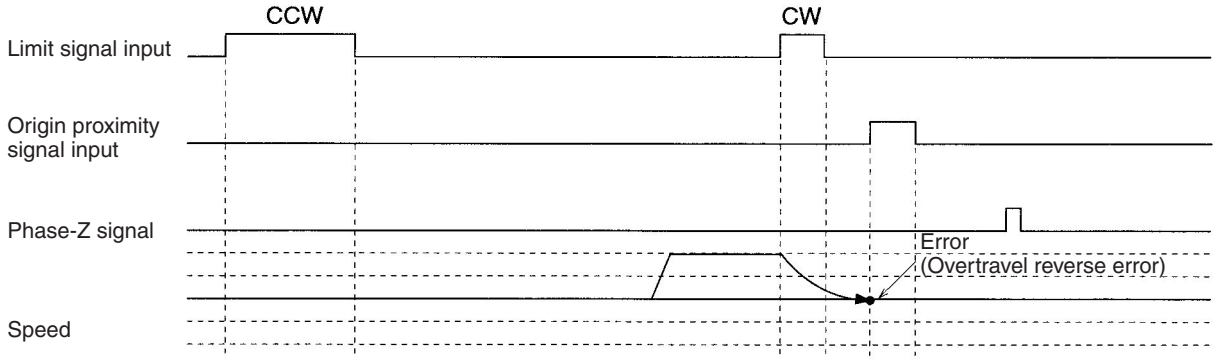

When the interval between the CW limit signal input and the origin proximity signal is short, an error will result as shown below.

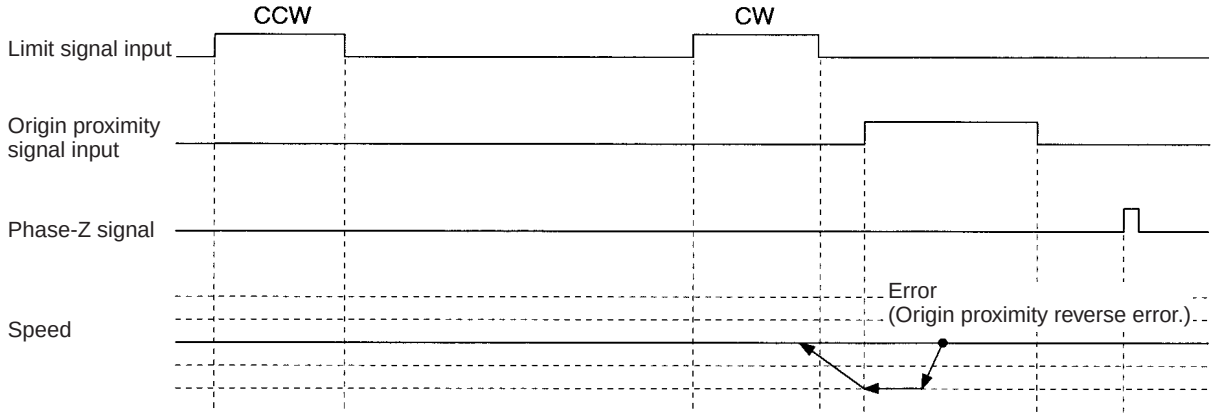

Reverse-mode Origin Search 13

This origin search is performed with no origin proximity signal input, and both phase-Z detection direction and initial origin search direction set to CW.

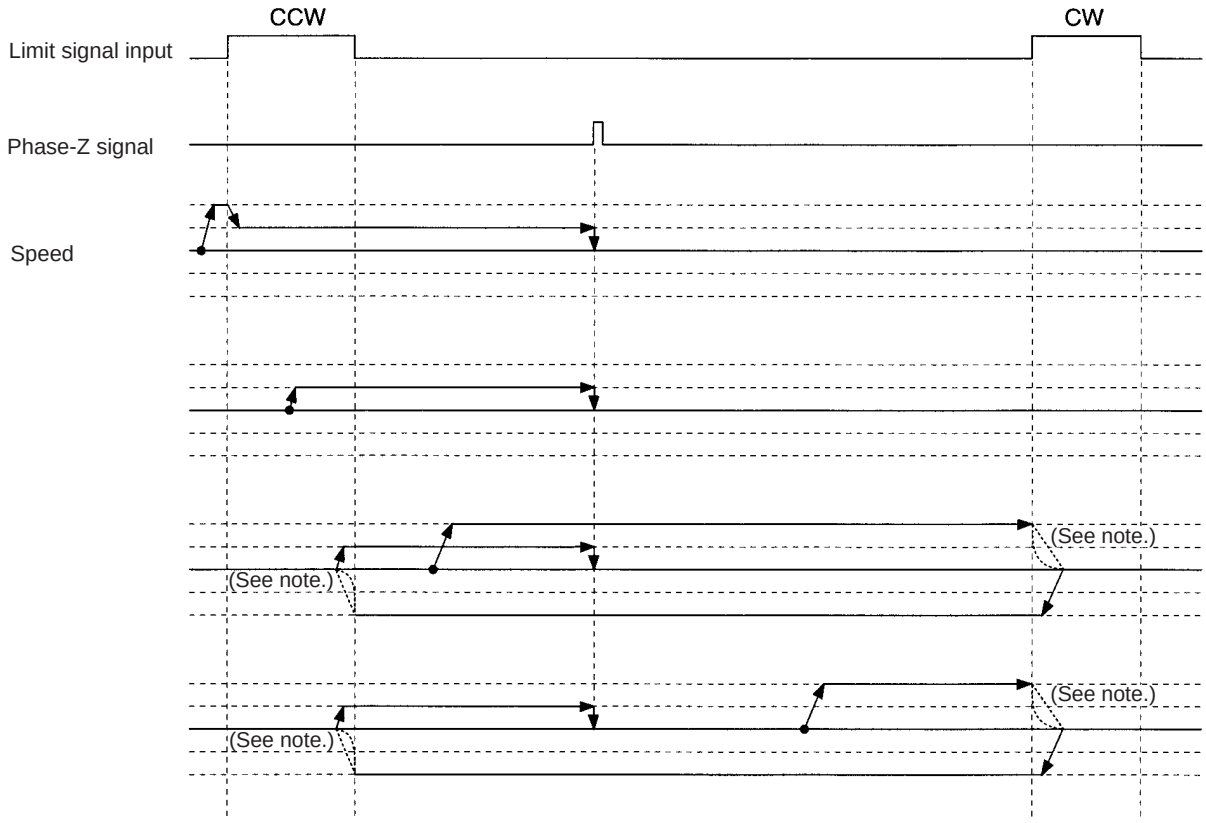

Note Operation will vary depending on the setting of the limit signal input.

One-direction Mode Origin Search 1

This origin search is performed with an origin proximity signal input, and the phase-Z detection direction set to CW.

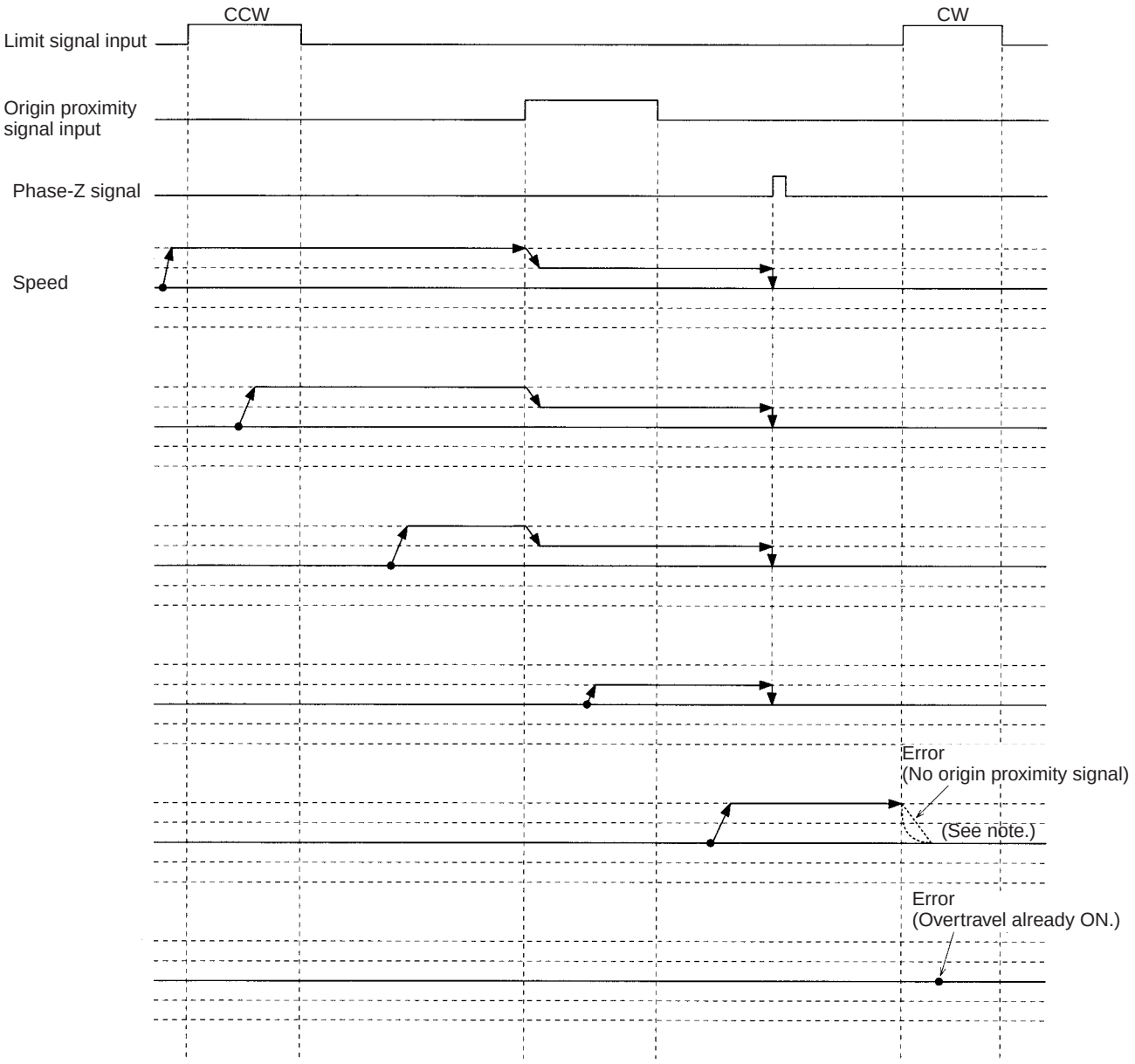

Note Operation will vary depending on the setting of the limit signal input.

One-direction Mode Origin Search 2

This origin search is performed with an origin proximity signal input, and the phase-Z detection direction set to CW.

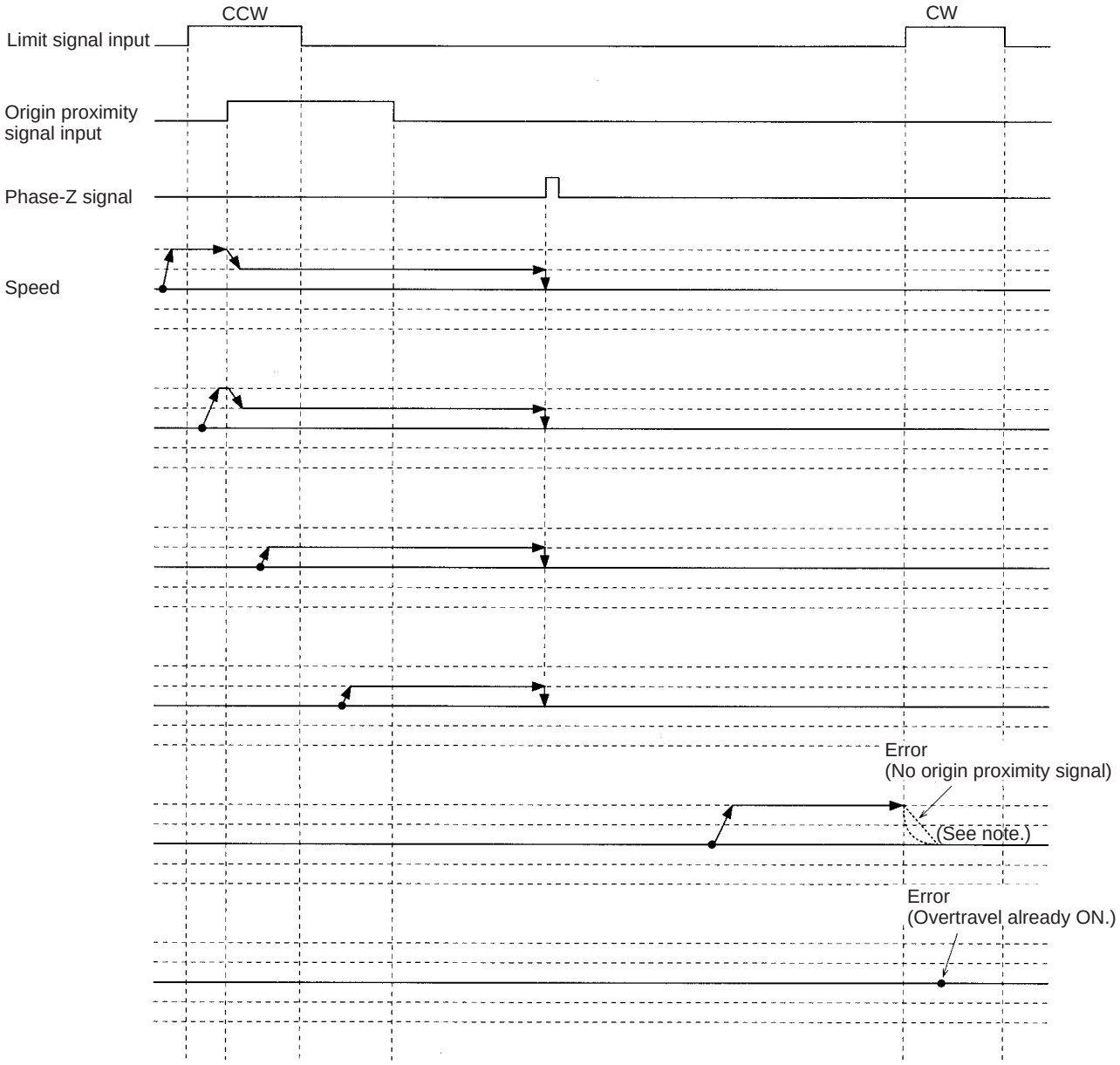

Note Operation will vary depending on the setting of the limit signal input.

One-direction Mode Origin Search 3

This origin search is performed with an origin proximity signal input, and the phase-Z detection direction set to CW.

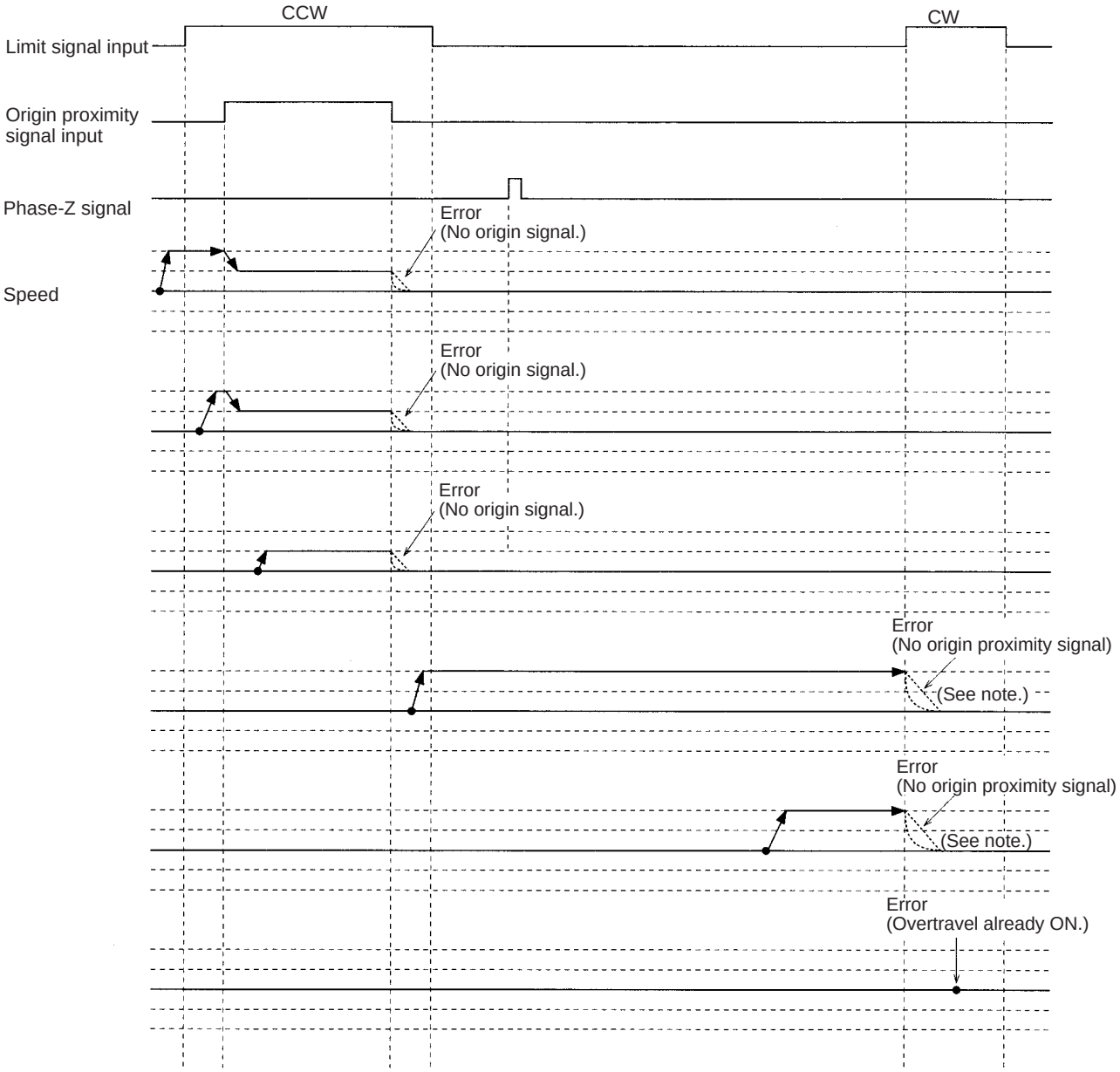

Note Operation will vary depending on the setting of the limit signal input.

One-direction Mode Origin Search 4

This origin search is performed with an origin proximity signal input, and the phase-Z detection direction set to CW.

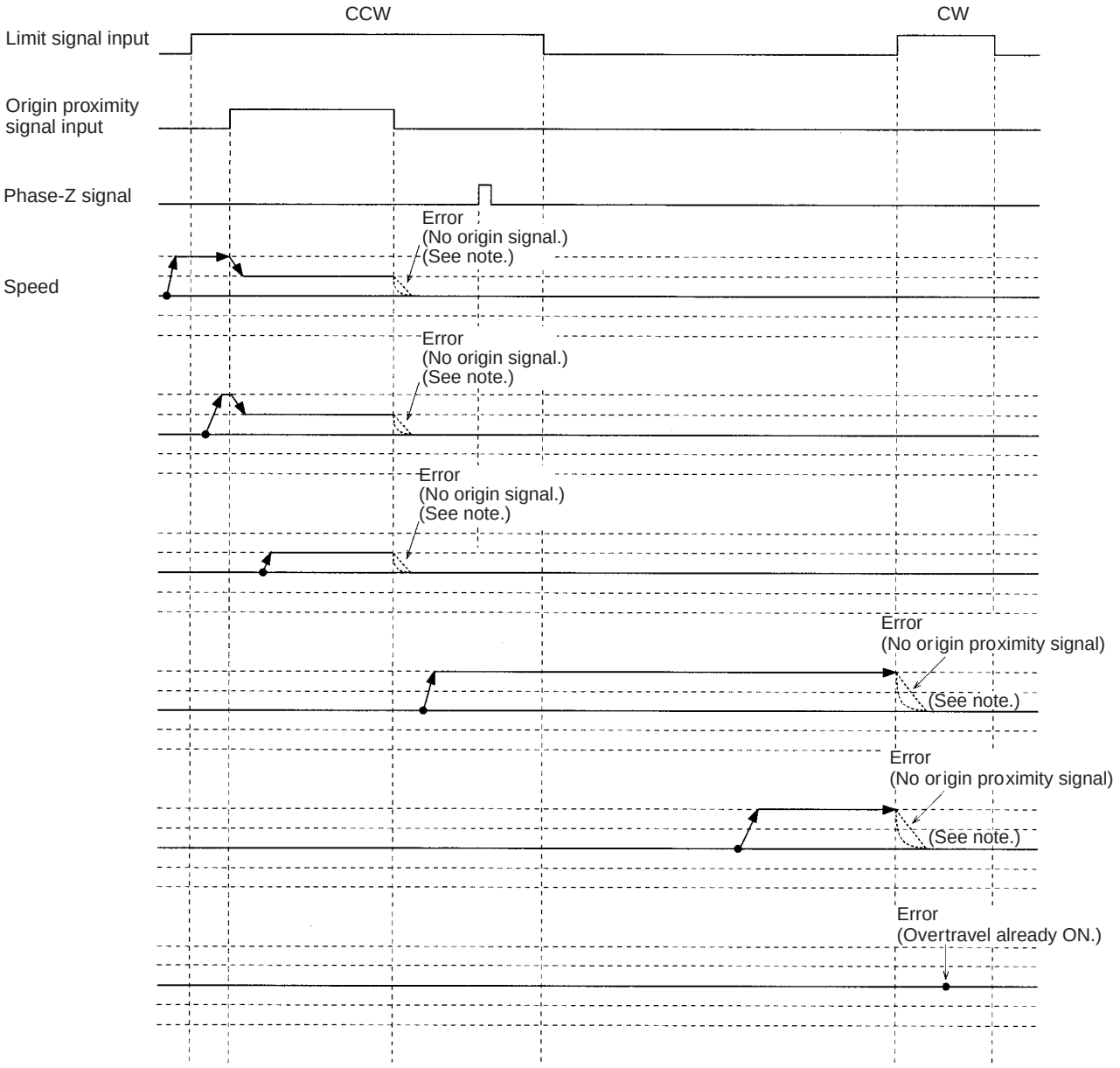

Note Operation will vary depending on the setting of the limit signal input.

One-direction Mode Origin Search 5

This origin search is performed with an origin proximity signal input, and the phase-Z detection direction set to CW.

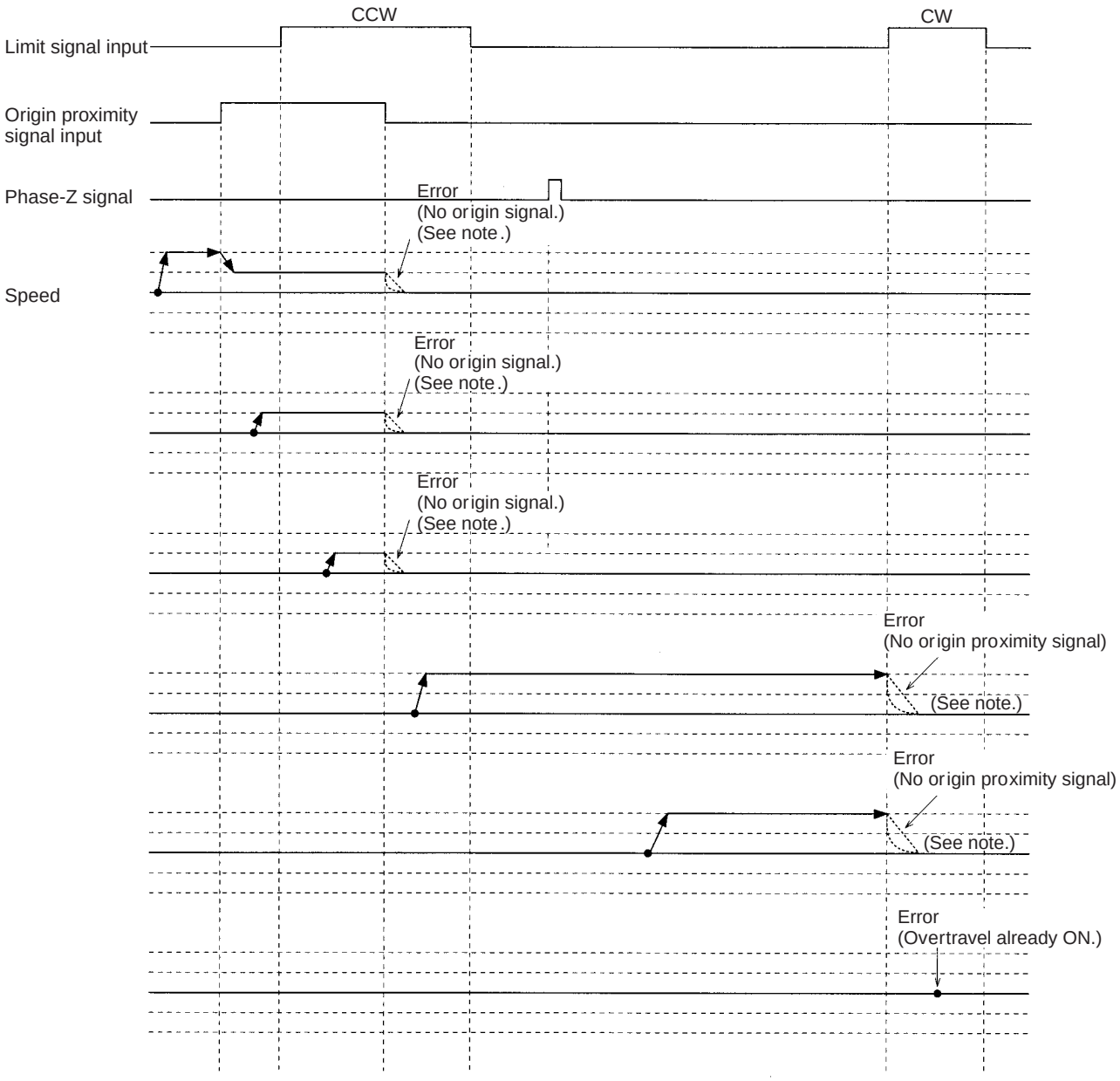

Note Operation will vary depending on the setting of the limit signal input.

One-direction Mode Origin Search 6

This origin search is performed with an origin proximity signal input, and the phase-Z detection direction set to CW.

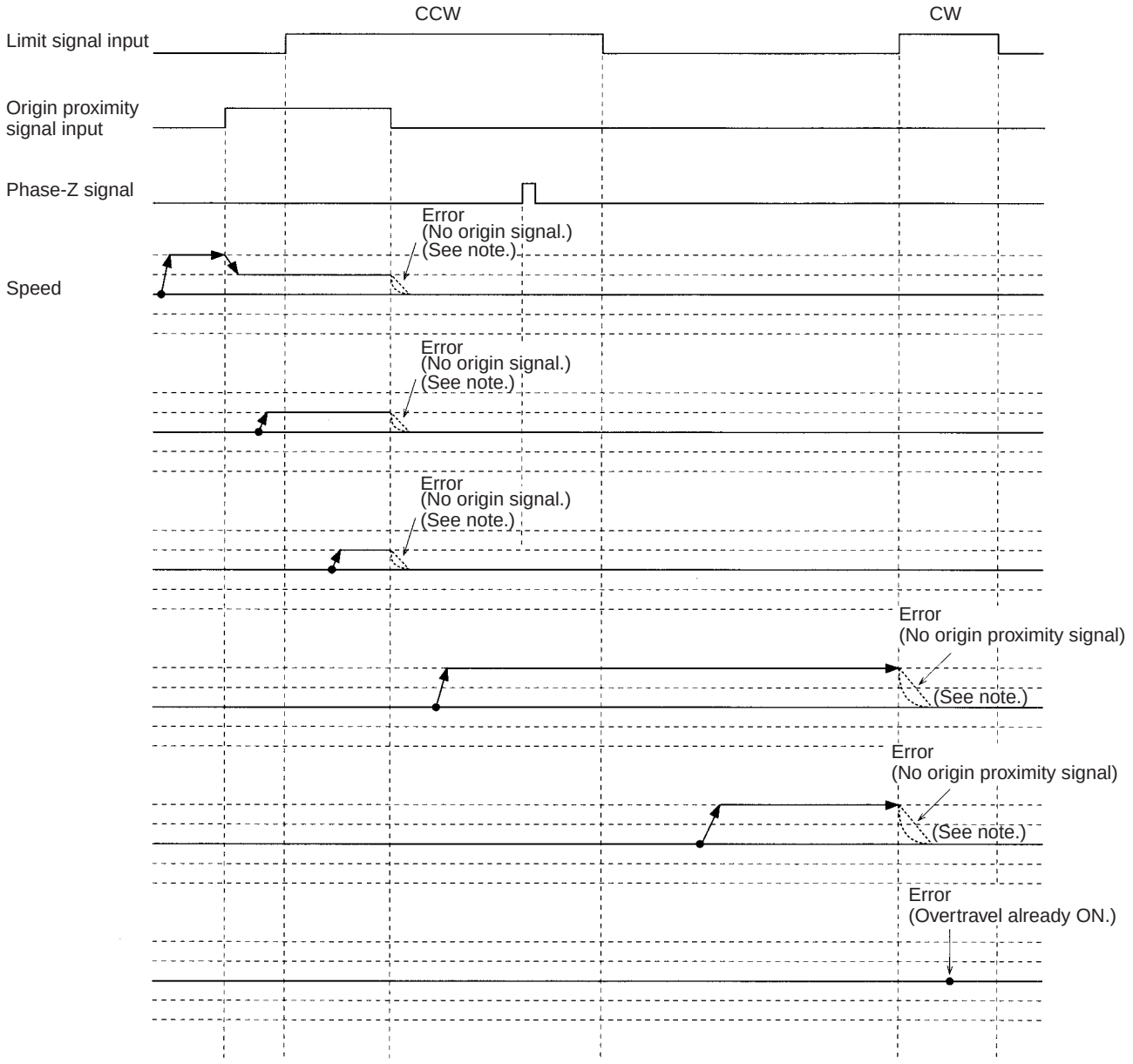

Note Operation will vary depending on the setting of the limit signal input.

One-direction Mode Origin Search 7

This origin search is performed with an origin proximity signal input, and the phase-Z detection direction set to CW.

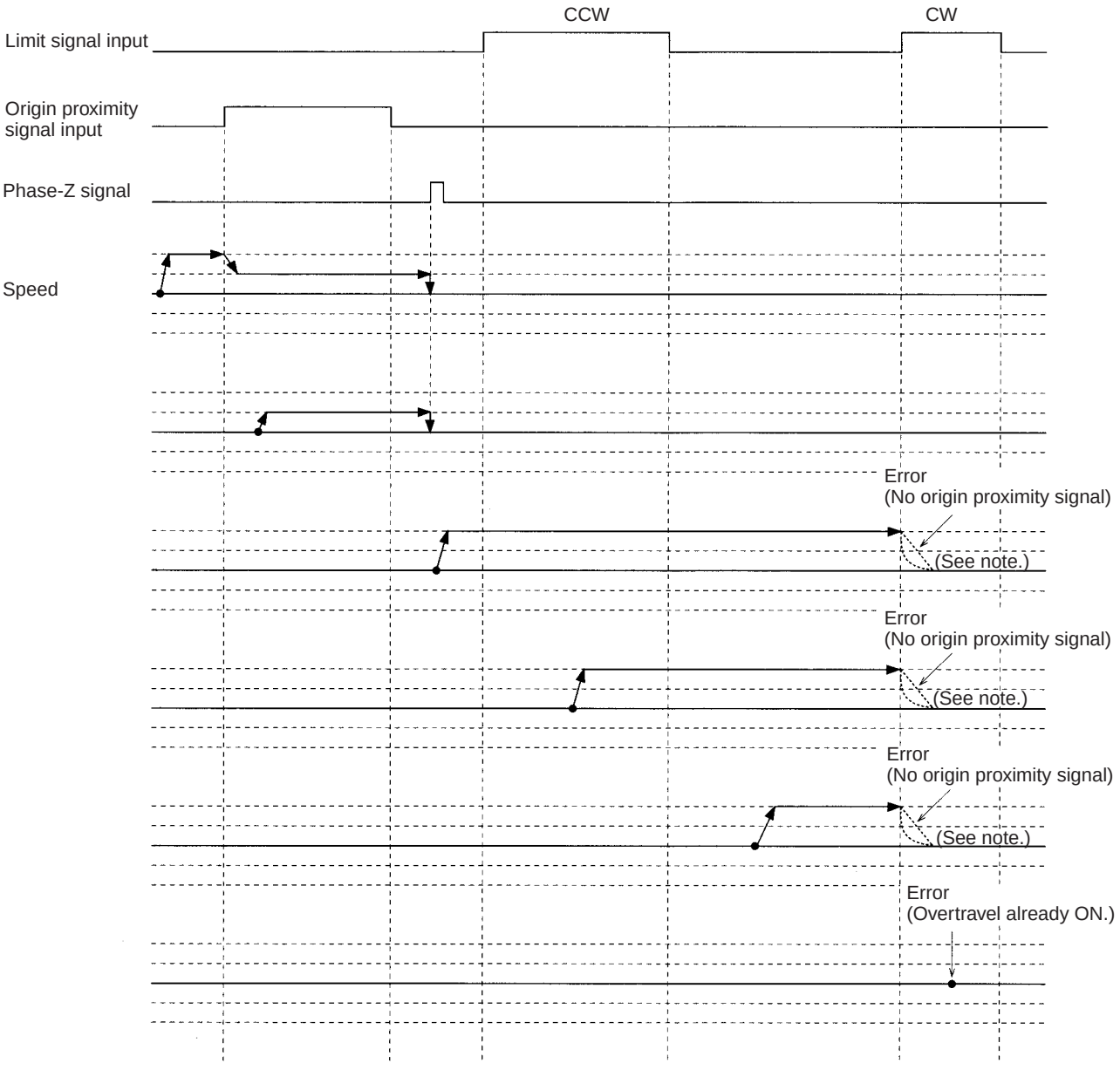

Note Operation will vary depending on the setting of the limit signal input.

One-direction Mode Origin Search 8

This origin search is performed with an origin proximity signal input, and the phase-Z detection direction set to CW.

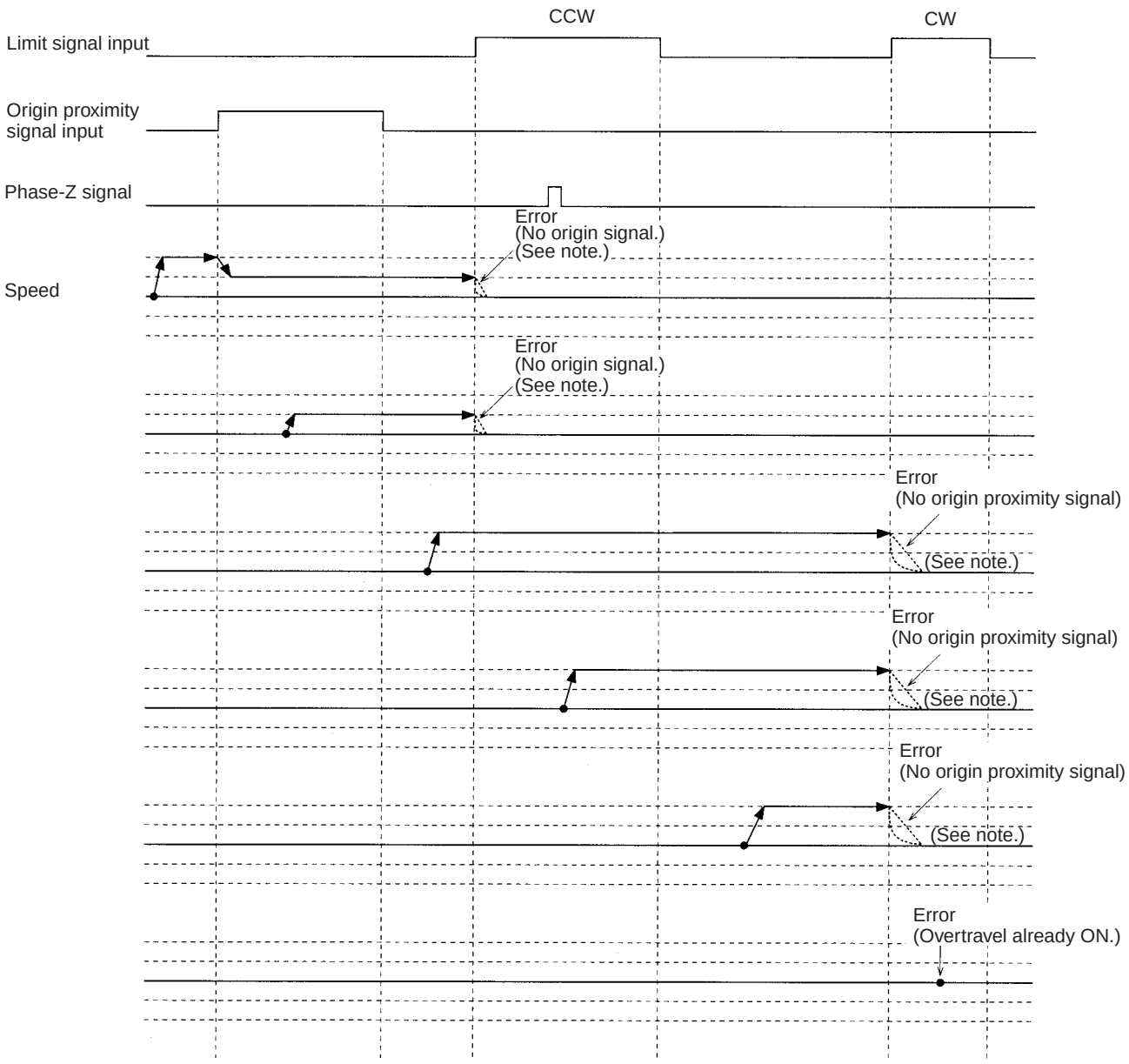

Note Operation will vary depending on the setting of the limit signal input.

One-direction Mode Origin Search 9

This origin search is performed with an origin proximity signal input, and the phase-Z detection direction set to CW with no phase-Z signal input.

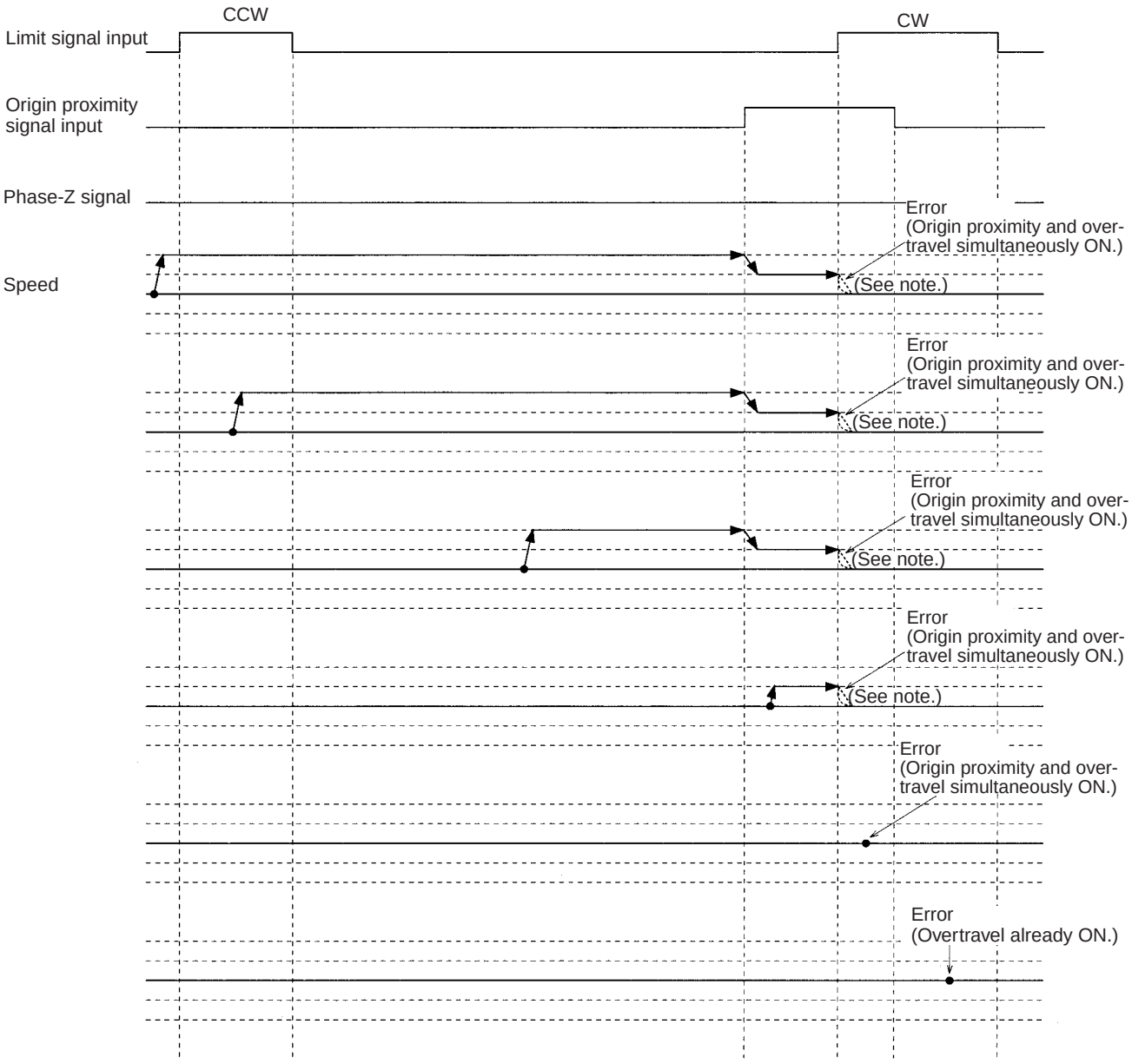

Note Operation will vary depending on the setting of the limit signal input.

One-direction Mode Origin Search 10

This origin search is performed with an origin proximity signal input, and the phase-Z detection direction set to CW with no phase-Z signal input.

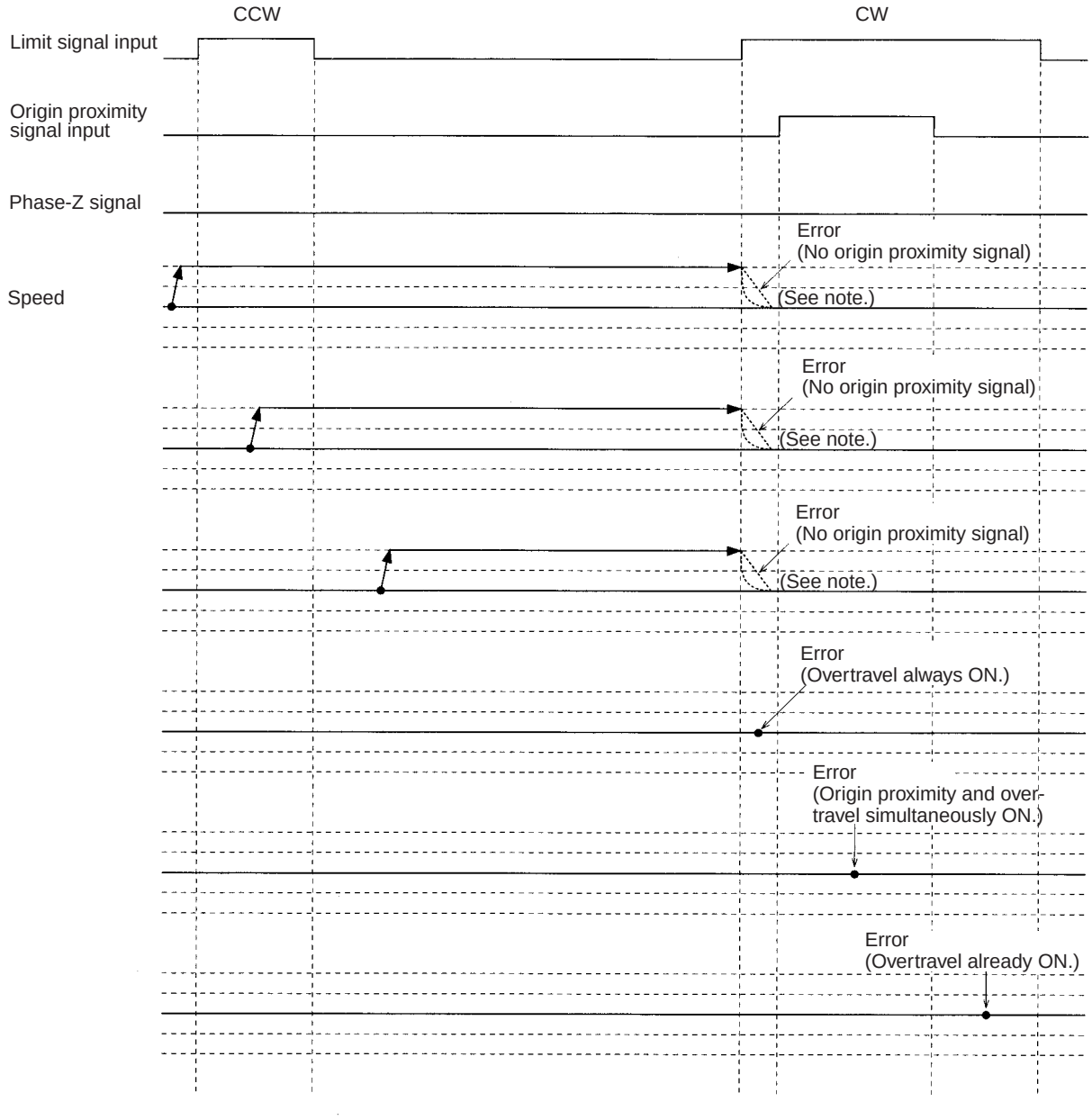

Note Operation will vary depending on the setting of the limit signal input.

One-direction Mode Origin Search 11

This origin search is performed with an origin proximity signal input, and the phase-Z detection direction set to CW.

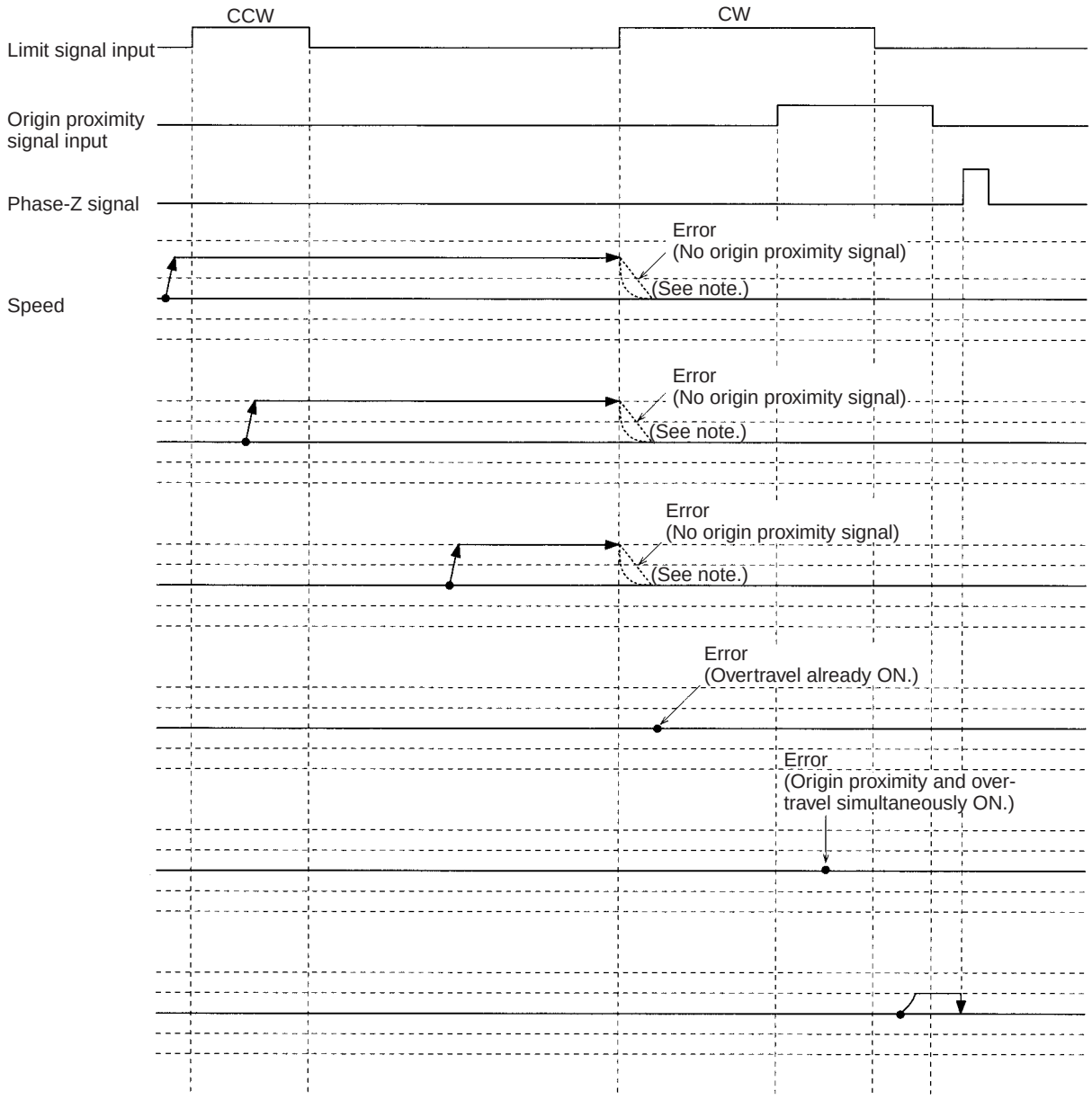

Note Operation will vary depending on the setting of the limit signal input.

One-direction Mode Origin Search 12

This origin search is performed with an origin proximity signal input, and the phase-Z detection direction set to CW.

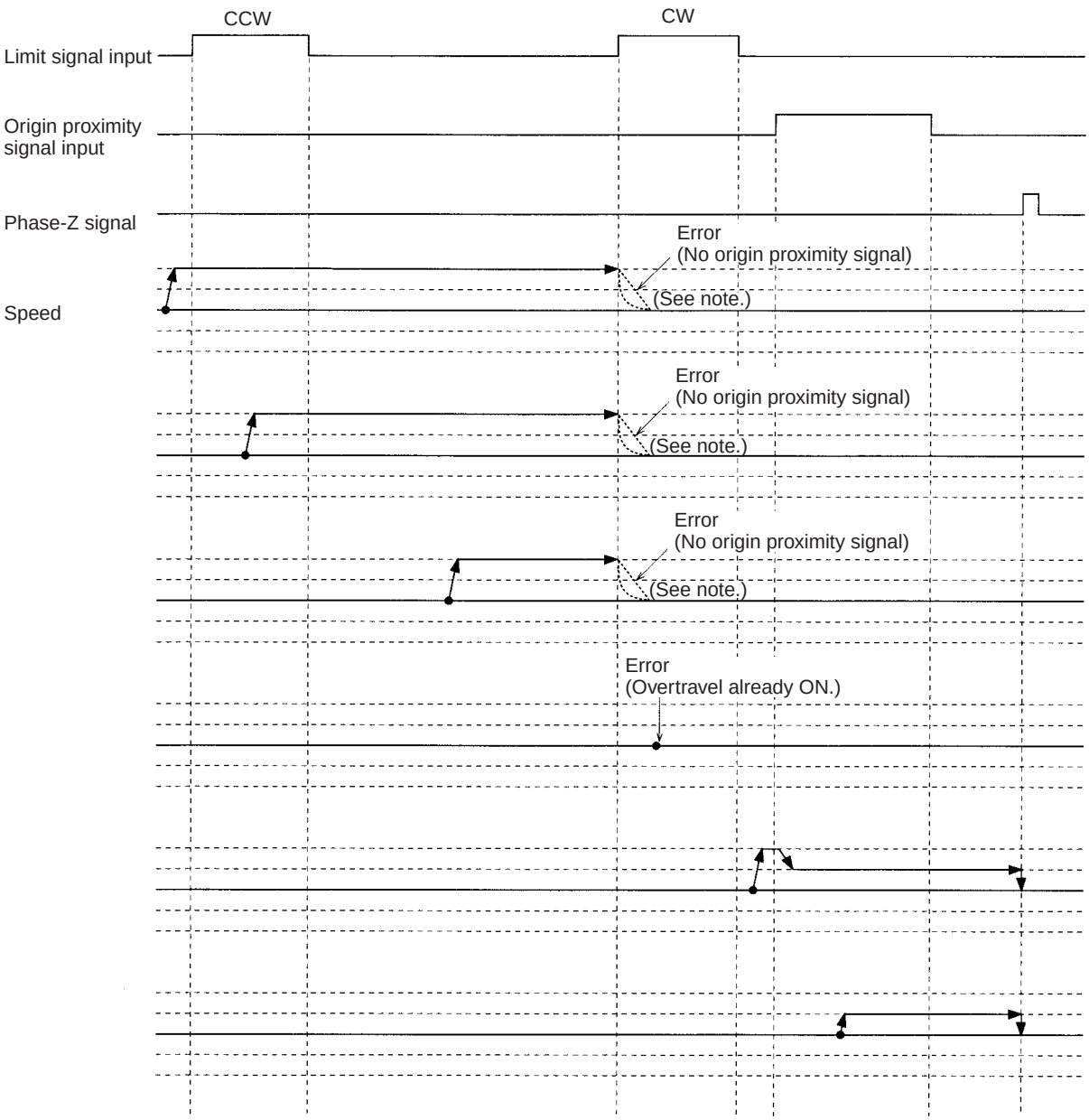

Note Operation will vary depending on the setting of the limit signal input.

One-direction Mode Origin Search 13

This origin search is performed with no origin proximity signal input, and the phase-Z detection direction set to CW.

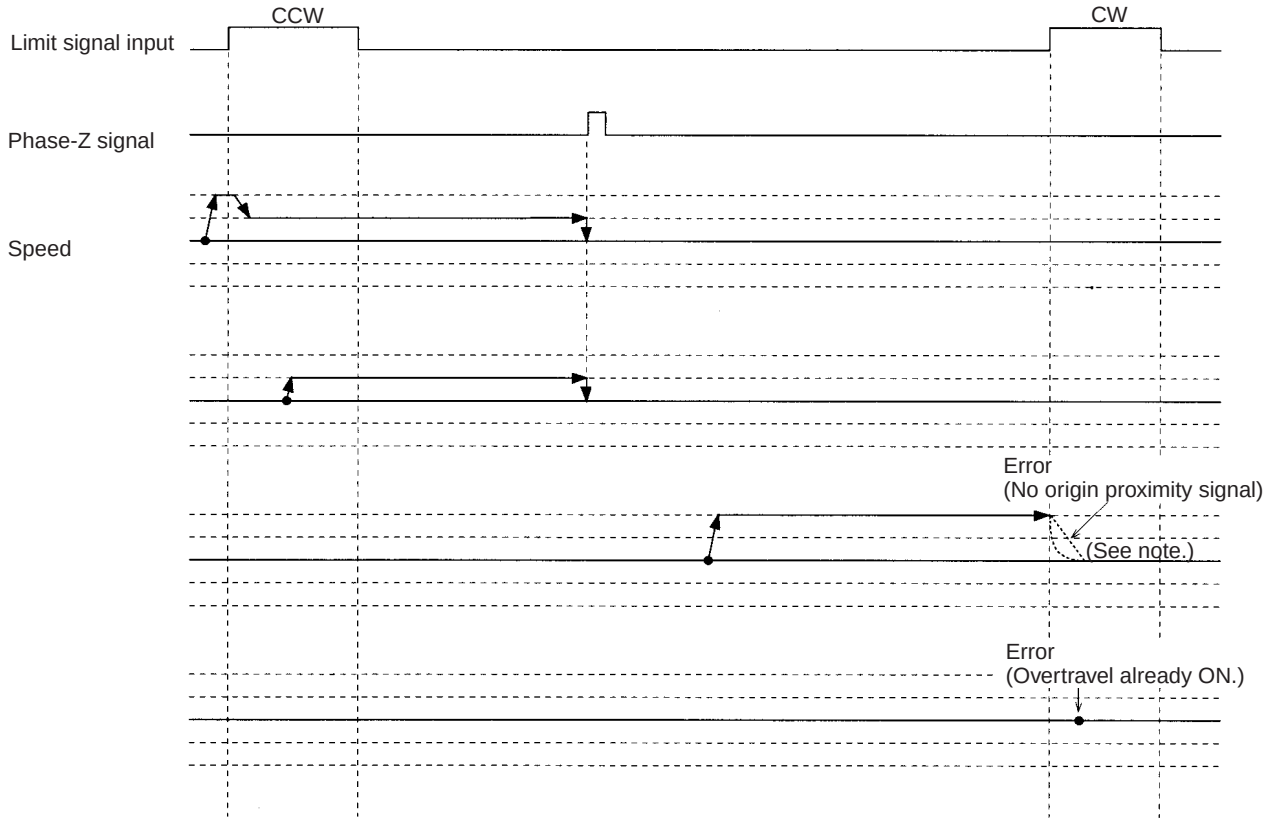

Note Operation will vary depending on the setting of the limit signal input.

Appendix G

Encoder Divider Rate and Rotation Speed for OMRON Servo Drivers

The number of pulses output from the Servo Driver can be changed by setting an encoder divider rate with OMNUC W-series AC Servo Drivers. The maximum encoder input frequency of the MC Unit is limited to a maximum value of 500 kpps. The maximum rotation speed will thus be limited according to the encoder divider rate.

W-series Servo Drivers

Encoder Divider Rate

PRM. No.	Parameter name	Description	Default	Unit	Setting range	Cycling power
Pn201	Encoder Divider Rate	Sets the number of pulses output by the Servo Driver.	1000	Pulses/unit	16 to 16384	Required

Encoder Divider Rate (Pn201) and Applicable Maximum Speeds (r/min)

Encoder Divider Rate (Pn201)	4096 or lower	4097 to 8192	8193 to 16384
Maximum speed (r/min)	5000	3662	1831

Appendix H
MC Program Coding Sheet

The following page can be copied for use in coding MC programs. When coding programs, be sure to specify all G codes and operands. These will be necessary when inputting programs.

Programmer: **Program Number:** **Date:** **Page:**

Block No.	G Code	Operands	Comments
N 0			
N 1			
N 2			
N 3			
N 4			
N 5			
N 6			
N 7			
N 8			
N 9			
N 0			
N 1			
N 2			
N 3			
N 4			
N 5			
N 6			
N 7			
N 8			
N 9			
N 0			
N 1			
N 2			
N 3			
N 4			
N 5			
N 6			
N 7			
N 8			
N 9			
N 0			
N 1			
N 2			
N 3			
N 4			
N 5			
N 6			
N 7			
N 8			
N 9			
N 0			
N 1			
N 2			
N 3			
N 4			
N 5			
N 6			
N 7			
N 8			
N 9			
N 0			
N 1			
N 2			
N 3			
N 4			
N 5			
N 6			
N 7			
N 8			
N 9			

Appendix I

System Parameter Settings

The following pages can be copied for use in recording system parameter settings.

Programmer: **Program Number:** **Date:** **Page:**

Unit Parameters

Parameter	Setting	Setting range
Number of axes		1 to 4
Number of tasks		1 to 4
Task 1 axes		Any combination of X, Y, Z and U
Task 2 axes		
Task 3 axes		
Task 4 axes		

Memory Parameters

Parameter	Setting		Setting range
	Start address	End address	
Task 1 position data			0000 to 1999
Task 2 position data			
Task 3 position data			
Task 4 position data			

Coordinate Parameters

Parameter	Setting			
	X axis	Y axis	Z axis	U axis
Reference origin offset				
Workpiece origin offset				

Machine Parameters

Parameter	Setting	Setting range
Minimum setting unit		1, 0.1, 0.01, 0.001, or 0.0001
Axis mode		Normal Feed Mode or Unlimited Feed Mode
Display unit		mm, inches, degrees, or pulses
Rotate direction		Forward by + voltage/reverse by + voltage
Emergency/limit input stopping method		Either immediately set the voltage output to 0 V or stop using the error counter pulses.
Encoder type		Incremental encoder or absolute encoder
Encoder resolution		1 to 65,535 ppr
Encoder ratio		1, 2 or 4
Encoder polarity		Forward or reverse by an increase in the encoder.
Pulse rate (numerator/denominator set separately)		1 to 100,000
Maximum motor speed		1 to 32,767 r/min
Negative software limit		–39,999,999 to +39,999,999
Positive software limit		
Origin search method		Origin mode, limit reverse mode, or one direction mode
Phase-Z detection direction		Positive or negative
Origin search start direction		Positive or negative in respect to the phase-Z detection direction
Origin decel. method		Using origin proximity input signal or limit input signal as origin proximity input signal
Origin proximity logic		N.O. or N.C.
Wiring check ON/OFF		ON or OFF
Wiring check time		0 to 99 (×10 ms)
Wiring check pulses		0 to 999 pulses

Programmer: **Program Number:** **Date:** **Page:**

Feedrate Parameters

Parameter	Setting				Setting range
	X axis	Y axis	Z axis	U axis	
Max. high-speed feed rate					1 to 39,999,999
Max. interpolation feed rate					
Origin search high speed					
Origin search low speed					
Max. jog feed rate					
Accel./Decel. curve					Trapezoidal or S-shaped
Acceleration time					0 to 9,999 ms
Deceleration time					
Interpolation accel. time					
Interpolation decel. time					
MPG ratio/electronic gear ratio 1 numerator					–10,000 to 10,000
MPG ratio/electronic gear ratio 1 denominator					1 to 10,000
MPG ratio/electronic gear ratio 2 numerator					–10,000 to 10,000
MPG ratio/electronic gear ratio 2 denominator					1 to 10,000
MPG ratio/electronic gear ratio 3 numerator					–10,000 to 10,000
MPG ratio/electronic gear ratio 3 denominator					1 to 10,000
MPG ratio/electronic gear ratio 4 numerator					–10,000 to 10,000
MPG ratio/electronic gear ratio 4 denominator					1 to 10,000

Zone Parameters

Parameter		Setting	Setting range
Zone 1 specification			Enable or disable zone 1 settings
Zone 1 valid timing			Valid after origin search or valid even if origin search has not been completed
Zone 1	Negative direction SV		–39,999,999 to 39,999,999
	Positive direction SV		
Zone 2 specification			Enable or disable zone 2 settings
Zone 2 valid timing			Valid after origin search or valid even if origin search has not been completed
Zone 2	Negative direction SV		–39,999,999 to 39,999,999
	Positive direction SV		
Zone 3 specification			Enable or disable zone 3 settings

Parameter		Setting	Setting range
Zone 3 valid timing			Valid after origin search or valid even if origin search has not been completed
Zone 3	Negative direction SV		–39,999,999 to 39,999,999
	Positive direction SV		
Zone 4 specification			Enable or disable zone 4 settings
Zone 4 valid timing			Valid after origin search or valid even if origin search has not been completed
Zone 4	Negative direction SV		–39,999,999 to 39,999,999
	Positive direction SV		
Zone 5 specification			Enable or disable zone 5 settings
Zone 5 valid timing			Valid after origin search or valid even if origin search has not been completed
Zone 5	Negative direction SV		–39,999,999 to 39,999,999
	Positive direction SV		
Zone 6 specification			Enable or disable zone 6 settings
Zone 6 valid timing			Valid after origin search or valid even if origin search has not been completed
Zone 6	Negative direction SV		–39,999,999 to 39,999,999
	Positive direction SV		
Zone 7 specification			Enable or disable zone 7 settings
Zone 7 valid timing			Valid after origin search or valid even if origin search has not been completed
Zone 7	Negative direction SV		–39,999,999 to 39,999,999
	Positive direction SV		
Zone 8 specification			Enable or disable zone 8 settings
Zone 8 valid timing			Valid after origin search or valid even if origin search has not been completed
Zone 8	Negative direction SV		–39,999,999 to 39,999,999
	Positive direction SV		

Servo Parameters

Parameter	Setting				Setting range
	X axis	Y axis	Z axis	U axis	
Error counter warning					0 to 65,000 pulses
In position					0 to 999 pulses
Position loop gain					5 to 150 (1/s)
Position loop FF gain					0 to 100 (%)
Backlash compensation value					0 to 10,000 pulses
Brake ON time					0 to 10,000 (ms)
Brake OFF time					0 to 10,000 (ms)

Appendix J
Position Data Coding Sheet

The following page can be copied to record the data stored in position data addresses.

Programmer: **Program Number:** **Date:** **Page:**

Address	Data	Comments
A 00		
A 01		
A 02		
A 03		
A 04		
A 05		
A 06		
A 07		
A 08		
A 09		
A 10		
A 11		
A 12		
A 13		
A 14		
A 15		
A 16		
A 17		
A 18		
A 19		
A 20		
A 21		
A 22		
A 23		
A 24		
A 25		
A 26		
A 27		
A 28		
A 29		
A 30		
A 31		
A 32		
A 33		
A 34		
A 35		
A 36		
A 37		
A 38		
A 39		
A 40		
A 41		
A 42		
A 43		
A 44		
A 45		
A 46		
A 47		
A 48		
A 49		
A 50		

Address	Data	Comments
A 51		
A 52		
A 53		
A 54		
A 55		
A 56		
A 57		
A 58		
A 59		
A 60		
A 61		
A 62		
A 63		
A 64		
A 65		
A 66		
A 67		
A 68		
A 69		
A 70		
A 71		
A 72		
A 73		
A 74		
A 75		
A 76		
A 77		
A 78		
A 79		
A 80		
A 81		
A 82		
A 83		
A 84		
A 85		
A 86		
A 87		
A 88		
A 89		
A 90		
A 91		
A 92		
A 93		
A 94		
A 95		
A 96		
A 97		
A 98		
A 99		

Index

A

absolute coordinates, 430
absolute encoders, 3
absolute positions, 430
  setting, 162
ABSOLUTE SPECIFICATION
  G90, 430
AC relay, 129
acceleration
  constant, 330
acceleration curve, 327
acceleration time, 154, 164
  changing, 451
acceleration/deceleration, 17
acceleration/deceleration curves, 154, 164, 369
  S, 369
  trapezoidal, 369
acceleration/deceleration times, 328
  linear interpolation, 329
addresses
  indirect addressing, 449
  meaning, 260
  position data
    specifying, 381
alarms
  alarm input, 247, 248, 259, 260
  resetting servo driver alarms, 253, 254
applicable PLCs, 16
applications
  precautions, xxiv
arithmetic, 420
ARITHMETIC OPERATIONS
  G60, 420
articulated robots, 7
autoload timeout, 158
autoloading, 244, 255
  resetting errors, 237, 249
  See also automatic loading
automatic loading, 327
  See also autoloading
  specifying, 199
automatic mode, 228, 232, 496
  flag, 245, 258
  origin searches, 467
  setting, 239, 240, 251, 252
automatic operation, 32
Automatic/Manual Mode Bit, 229
axes, 30, 376
  declaring, 382
  program, 382
  status flags, 247, 248, 259, 260
axis configuration, 156
axis mode, 159
axis parameters, 151

B

backlash, 18
  correction, 327
backlash correction, 356
  setting, 169
Backplane, 16
  mounting Units, 104
block diagram, 28
blocks, 31
  block ends in Pass Mode, 341
  block numbers, 34
  conditional jump, 424
  current block number, 193, 245, 258
  end, 425
  executing single blocks, 239, 240, 251, 252
  jump, 423
  numbers
    G language, 34
  optional ends, 425
  skipping, 427
brake OFF time, 169
brake ON time, 169
Busy Flag, 231, 247, 248, 259, 260

C

cables, 5, 110, 499
  computer to CPU Unit, 6
  driver, 116
  Teaching Box
    removal, 145
CHANGE PARAMETER
  G69, 421
CHANGE REFERENCE COORDINATE SYSTEM PV
  G54, 419
CHANGE WORKPIECE ORIGIN OFFSET
  G53, 418
CIRCULAR INTERPOLATION
  G02 and G03, 388
circular interpolation, 326, 388, 400, 448
  increasing accuracy, 459
  multiturn, 9
  plane specification, 400
command area, 196, 203
  addresses, 197
  configuration, 197
  data, 148
  reading/writing, 203
  transferring data, 206, 217
comparison with earlier MC Units, 38
components, 102
computer
  connecting, 143
CONDITIONAL JUMP
  G71, 424
connections
  example, 110, 111

examples
encoders, 119
servo driver
control cables, 503
connectors
DRV, 112
wiring, 107, 118
continuous path control
See also CP control
control bits
timing charts, 613
control method, 16
control system
configuration, 12
principles, 12
controls
CP, 9
PTP, 8
triangular, 328
coordinate parameters
descriptions, 180
coordinate system, 416
absolute coordinates, 430
default system, 383
incremental coordinates, 430
reference coordinate system setting, 416
selecting, 416, 417
workpiece coordinate system setting, 417
coordinate system parameters, 153, 163
coordinates
absolute, 430
relative, 430
CP control, 9
override, 350
CPU Unit, 208
cycle time, 554
data transfers, 223
interrupts, 326
current consumption, 16
CW, 15
CWW, 15
CX-Motion, 203, 208, 224
functions, 24
setting backlash correction, 357
cylindrical robots, 8

D

D codes, 19, 326, 438
data
configuration, 147
definition, 148
editing, 24
exchange, 26
receiving, 244, 255
saving, 221
storing, 201, 208
structure, 27
transfer words, 226
transferring, 29, 148, 201, 244, 255
overall structure for CPU Unit, 224
transferring and saving times, 554
transferring using command area, 206, 217
transferring with IOWR/IORD, 204
transfers to/from CPU Unit, 223
types, 203
data formats, 20
DC relay, 129
deceleration curve, 327
deceleration stop, 230
deceleration stops, 243, 253, 254
deceleration time, 154, 164
demand positions,, 20
dimensions, 16, 106
direction, 15, 141, 159
display unit, 159
downloading, 19
Driver
See also Servo Driver
Driver Connection Cable, 5
Driver Connection Cables, 116
DRV connectors, 112
DWELL TIMER
G04, 395
dwell timer, 395

E

EC Directives, xxvi
electronic gear, 365
electronic gear ratio, 165
elf-diagnostic function, 19
emergency stop/limit input stop selection, 160
encoder interface, 17
encoders, 479
absolute/incremental setting, 160
application, 466, 467
connection examples, 119
interface specifications, 483
parity, 160
ratio, 160
resolution setting, 160
response frequency, 3
setup, 480
specifications, 15
error codes, 189
error counter
monitoring, 190
operation, 12
resetting, 230, 243, 253, 254, 327
selecting function, 237, 249
stopping the motor, 134, 136
warning flag, 247, 248, 259, 260
wiring check functions, 132
error counter overflow, 136
error counter values, 194

error counter warning value, 169
errors
  axis error codes, 541
  command system, 134
  detecting, 19
  error code, 244
  Error Flag, 244, 255
  error log, 19, 546
  error type, 244, 255
  feedback system, 138
  indicators, 531
  positioning, 133
  resetting, 237, 249
  system error codes, 532
  task error codes, 536
  Task Error Flag, 245, 258
  teaching, 245, 258, 492
    address over, 493
  troubleshooting, 521
  wiring, 139
execution times, 23

F

failsafe circuits, 133
failures
  See also errors
features, 2
feed rate
  parameters
    descriptions, 182
    details, 164
feed rates, 18
  parameters, 154
feedback pulses, 15, 129
feedforward gain, 18
feeding
  fixed length, 9
  interrupt feeding, 9, 326, 406
  speed control, 405
  unlimited feeding, 10, 327
fixed-length feeding, 9
flags
  flags used with IORD, 214
  flags used with IOWR, 210
  timing charts, 613
flash memory, 28, 208, 221, 244, 255
  command area, 197
  contents, 227
  saving data, 509
Forced Block End
  M codes 000 to 499, 433
  M codes 500 to 999, 435
functions
  CX-Motion, 24
  methods for using, 43
  summary, 11
  Teaching Box, 25

G

G codes
  operating modes, 338
G language
  arguments, 34
  codes, 35
  command list, 377
  commands by purpose, 37
  executing from ladder program, 462
  formats, 378
  program structure, 30
  programming examples, 34, 445
  See also G-language commands
  symbols, 380
general input
  stopping
    program, 455
G-language commands
  G00: POSITIONING, 384
  G01: LINEAR INTERPOLATION, 385
  G02 and G03: CIRCULAR INTERPOLATION, 388
  G04: DWELL TIMER, 395
  G10: PASS MODE, 396
  G11: STOP MODE, 398
  G13: IN-POSITION CHECK OFF MODE, 399
  G17 to G22: CIRCULAR PLANE SPECIFICATION, 400
  G26: REFERENCE ORIGIN RETURN, 402
  G27: WORKPIECE ORIGIN RETURN, 403
  G28: ORIGIN SEARCH, 404
  G29: ORIGIN UNDEFINED, 405
  G30: Speed Control Axis Feeding, 405
  G31: INTERRUPT INCHING, 406
  G32: TRAVERSE, 412
  G50: SELECT REFERENCE COORDINATE SYSTEM, 416
  G51: SELECT WORKPIECE COORDINATE SYSTEM, 417
  G53: CHANGE WORKPIECE ORIGIN OFFSET, 418
  G54: CHANGE REFERENCE COORDINATE SYSTEM PV, 419
  G60: ARITHMETIC OPERATIONS, 420
  G63: SUBSTITUTION, 421
  G69: CHANGE PARAMETER, 421
  G70: UNCONDITIONAL JUMP, 423
  G71: CONDITIONAL JUMP, 424
  G72: SUBPROGRAM JUMP, 424
  G73: SUBPROGRAM END, 425
  G74: OPTIONAL END, 425
  G75: OPTIONAL SKIP, 427
  G76: OPTIONAL PROGRAM PAUSE, 428
  G79: PROGRAM END, 429
  G90: ABSOLUTE SPECIFICATION, 430
  G91: INCREMENTAL SPECIFICATION, 430
G-language programming, 375

H–I

helical circular interpolation, 326
high-speed origin search feed rate, 164
I/O connector, 107
I/O monitor data, 189, 192
I/O refreshing, 27
I/O tables, 504
incremental positions, 430
INCREMENTAL SPECIFICATION
  G91, 430
indicators, 102
Initialization Flags, 227
IN-POSITION CHECK OFF MODE
  G13, 399
In-position Check OFF Mode, 399
  minimum operation time, 559
in-position range, 169
inputs
  application, 455
  See also optional inputs
inspection, 550
  tools, 551
installation, 101
INTELLIGENT I/O READ
  See also IORD
INTELLIGENT I/O WRITE
  See also IOWR
interface circuits
  DRV connectors, 126
  I/O connectors, 126
interlocks
  M code, 431, 433
interpolation
  circular, 326, 331, 388, 448
    plane specification, 400
  linear, 326, 328, 385, 447
    acceleration/deceleration times, 329
    triangular control, 331
  See also circular interpolation
  See also linear interpolation
interpolation acceleration time, 164, 451
interpolation deceleration time, 165
interrupt feeding, 9
INTERRUPT INCHING
  G31, 406
interrupts
  CPU Unit, 3, 326
  external interrupt response time, 560
  G code interruption time, 558
  notification time, 558
IORD, 30, 203, 204, 224
  execution timing, 216
  specifications, 213
IOWR, 30, 203, 204, 224
  execution timing, 212
  setting backlash correction, 357
  specifications, 209
  specifications for command area, 221

J–M

jogging, 230, 243, 253, 254
  direction, 253, 254
  feed rate, 164
jumps, 423, 424
ladder programs
  executing G-language programs, 462
  teaching, 489, 491
lags, 23
LINEAR INTERPOLATION
  G01, 385
linear interpolation, 326, 385, 447
low-speed origin search feed rate, 164
M codes, 245, 258, 326, 431, 433
  0 to 499, 433
  000 to 499
    clearing, 433
  500 to 999, 433
    clearing, 435
  clearing, 433, 435
  examples, 433
  Pass Mode, 436
  resetting, 239, 240, 251, 252
  timing chart, 432
machine parameters, 153
  descriptions, 174
  details, 159
manual mode, 228, 230, 496
  command combinations, 231
  enabled functions, 228
  flag, 245, 258
  origin searches, 467
  setting, 239, 240, 251, 252
manual operation
  Teaching Box, 33
manual pulse generator
  See also MPG
maximum feed rate, 164
maximum interpolation feed rate, 164
maximum motor frequency, 161
mechanical systems, 496
memory, 28
memory management parameter, 151, 152
  description, 173
minimum setting uni, 20
minimum setting unit, 159
model number, 16
monitor data, 148
  configuration, 189, 191
  reading, 203
monitoring, 24, 189
  See also monitor data
mounting Units, 104
MPG, 3, 5, 18
  enabling, 243, 253, 254

enabling operation, 230
ratio, 253, 254, 327
wiring, 125
MPG ratio, 154, 157, 165
multi-tasking, 3
multiturns set, 196

N–O

No. of tasks, 156
numerical values
arithmetic operations, 420
operating environment
precautions, xxiii
operating modes
Constant Acceleration Mode, 343
constant acceleration mode, 340
default mode, 383
G codes, 338
In-position Check OFF Mode, 342
limitations, 345
Pass Mode, 339
limitations, 345
Pass Mode limitations, 344
positioning, 326
See also automatic operation
See also manual operation
operation, 239, 240, 251, 252
basic, 7
basic operating procedure, 42
direction, 141
executing single blocks, 239, 240, 251, 252
internal operations, 12
overview of operations, 21
pausing, 239, 240, 251, 252
positioning, 325
starting peripherals, 460
startup procedure, 497
startup status, 245, 258
stopping, 327
summary, 326
operation time, 558, 559
OPTIONAL END
G74, 425
optional inputs
controlling status, 238, 250
standby flag, 245, 258
OPTIONAL PROGRAM PAUSE
G76, 428
OPTIONAL SKIP
G75, 427
origin
absolute encoder, 480
establishing, 465
in-position flag, 247, 248, 259, 260
moving to origin, 481
offsets, 450
presetting, 466
setting, 230
setting absolute origin, 243, 253, 254
setting offsets, 418
teaching, 466
undefining, 405
workpiece coordinate system, 418
origin returns, 402, 403
ORIGIN SEARCH
G28, 404
origin search, 472
patterns, 472
settings, 468
origin searches, 230, 243, 253, 254, 404, 466
deceleration and direction, 471
deceleration method, 162
direction, 161
input logic, 162
method, 161
methods and parameters, 468
operations, 470
search patterns, 472, 629
signals, 468
ORIGIN UNDEFINED
G29, 405
orthogonal robots, 7
output port setting, 157
outputs
controlling output port status, 237, 249
delays, 557
overrides, 18, 240, 242, 253, 254, 326
feed rate
CP control, 350
PTP control, 349

P

parameters, 451
changing, 326, 421
changing settings, 421
interpolation acceleration time, 451
See also axis parameters
See also coordinate parameters
See also feed-rate parameters
See also machine parameters
See also memory management parameter
See also system parameters
See also Unit parameters
See also zone parameters
PASS MODE
G10, 396
Pass Mode, 158, 396
M codes, 436
minimum operation time, 558
Pass mode, 339
pausing operation, 239, 240, 251, 252
performance, 23, 553
Peripheral Devices
connecting, 142

starting during operation, 460
phase Z margins, 195
pick-and-place operations, 3
PLC
applicable models, 16
PLC Interface Area, 224
allocations, 226
list of allocations, 237
lists, 565
response times, 261
See also Interface Area
point-to-point control
See also PTP control
position data, 19, 148, 187, 420
address
specifying, 381
addresses, 188, 381
arithmetic operations, 420
calculating, 453
calculating while positioning, 453
changing during program execution, 455
coding sheet, 667
configuration, 188
first number setting, 158
reading using command area, 198
reading/writing, 203
specifying using register, 381
direct addressing, 382
indirect addressing, 382
substitution, 421
teaching, 488
writing using command area, 198
position loop FF gain, 169
position loop gain, 18, 169
POSITIONING
G00, 384
positioning, 325, 384
completed flag, 247, 248, 259, 260
high speed, 461
turntables, 457
positioning errors, 133
power supply voltage, 16
precautions
applications, xxiv
D codes, 438
executing commands, 231
flash memory, 222
general, xxii
handling Units, 105, 551
operating environment, xxiii
origin, 482
replacing servomotors, 552
safety, xxii
servolock, 235
Servomotor, 130
startup, 518
stopover function, 443
system configuration, 104
wiring, 128
present positions, 20, 193, 196
changing, 419
monitoring, 190
presetting, 327
presetting using command area, 199
resetting, 243, 253, 254
present value
reference coordinate system, 419
processing flow, 553
PROGRAM END
G79, 429
Program Execution Completed Flag, 233
Program Execution Flag, 233
program number, 382
setting, 232
program numbers, 34
declaring, 382
Programming Devices, 499
programs, 19, 455
axes, 382
capacity, 31
completion flag, 245, 258
currently executing program number, 192
editing, 24
ending, 429
executing from ladder programs, 462
executing program number, 245, 258
execution flag, 245, 258
format, 382
G language, 375
format, 34
ladder programs, 509
numbers
G language, 34
parameters, 382
pausing, 428
program number, 382
programming examples, 210, 215, 219, 222, 232, 235
programming sheet, 659
programs and tasks, 376
reading program numbers, 239, 240, 251, 252
reading/writing, 203
See also G language
See also ladder programs
stopping
general input, 455
task program numbers, 239, 240, 251, 252
projects, 505
PTP control, 8, 326, 327, 384, 446
override, 349
pulse rate, 160, 174

R

reference coordinate system
changing present value, 419
reference origin, 402

offset, 163
offsets, 20
REFERENCE ORIGIN RETURN
G26, 402
reference origin returns, 230
registers, 19, 381, 420, 449
arithmetic operations, 420
specifying, 381
substitution, 421
relative coordinates, 430
replacing
MC Unit, 551
response times, 261
Restart Flags, 227
robots, 7
cylindrical, 2
horizontal articulated, 2
rotation
direction, 159
runaway
due to disconnected wiring, 131
due to faulty wiring, 130

S

S curves, 369
safety features
other, 138
safety precautions
See also precautions
saving data, 221
SELECT REFERENCE COORDINATE SYSTEM
G50, 416
SELECT WORKPIECE COORDINATE SYSTEM
G51, 417
semi-closed loop system, 12
servo
control system, 499
locking and unlocking, 243, 253, 254, 327
locking/unlocking, 230
parameters, 355
servo locked flag, 247, 248, 259, 260
servo driver
connecting, 503
resetting alarms, 243, 253, 254
Servo Drivers, 5
servo drivers
cables, 116
connectors, 112
speed characteristics, 13
servo parameters, 155
descriptions, 185
details, 169
servo system
semi-closed loop, 12
servomotors, 15
runaway, 130
wiring precautions, 130
setting unit
minimum, 20, 159
software limits, 20, 161
solenoid, 129
Special I/O Units, 19
specifications, 16
SPEED CONTROL AXIS FEEDING
G30, 405
speed reference, 17
starting operation, 239, 240, 251, 252
startup, 495
startup time, 23, 554, 555
status
axis status, 247, 248, 259, 260
system status, 244, 255
STOP MODE
G11, 398
Stop Mode, 339, 398
stop mode, 338
stopover function, 326, 437, 440
stopping, 327
program
general input, 455
storing data, 201
SUBPROGRAM END
G73, 425
SUBPROGRAM JUMP
G72, 424
subroutines, 19, 424, 425
end, 425
jump, 424
SUBSTITUTION
G63, 421
substitution, 421
Support Software, 3
surge absorber
wiring, 129
surge-absorbing diode
wiring, 129
switches
setting, 103
sync encoder, 18
enabling, 243, 253, 254
ratio, 327
sync encoder ratio, 157
sync encoders, 5
system configuration, 4
precautions, 104
startup, 498
system error code, 191
system parameters, 148, 151
descriptions, 171
details, 156
lists, 589
origin searches, 469
reading/writing, 203
saving, 506
setting sheets, 661

validating, 170

T

task axis declaration, 157
task error codes, 191
tasks, 19, 30, 376
  changing the configuration, 150
  configuration, 149
  program numbers, 239, 240, 251, 252
  programs and tasks, 376
  status, 189, 245, 258
teaching, 239, 240, 245, 251, 252, 258, 488, 490
  addresses, 488
  current address, 193
  errors, 492
  ladder programs, 489, 491
  origin, 466
  setting address via command area, 199
  Teaching Box, 490
Teaching Box, 3, 33, 203, 208, 244, 255
  connecting, 144
  functions, 25
  language, 152
  operating mode, 519
  origin, 466
  trial operation, 514
Teaching Box language/autoload timeout, 158
Terminal Blocks
  connection cables, 5
time requirements, 23
timing charts, 613
  control bits, 613
  control flags, 613
  MC Unit to CPU Unit communications, 236
  servolock/unlock, 354
transferring data, 26, 29, 201
trapezoidal curves, 369
TRAVERSE
  G32, 412
traverse operation, 3, 10, 326, 412
  application, 462
  reversal time, 560
trial operation, 512
triangular control, 328
  linear interpolation, 331
troubleshooting, 521
  wiring check, 139

U

UNCONDITIONAL JUMP
  G70, 423
unit number
  setting, 103
unit parameters, 151, 152
  descriptions, 171
unlimited feeding, 10
updating from previous model, 40

W

wait time, 395
weight, 16
Windows, 3
wiring, 107
  check function, 132
  precautions, 128
  startup, 498
wiring check
  parameter, 162
  pulses, 162
  time, 162
wiring terminals, 110
workpiece coordinate system
  changing origin, 418
workpiece origin, 403
  offset, 163
workpiece origin offsets, 20
WORKPIECE ORIGIN RETURN
  G27, 403
workpiece origin shift, 190

Z

zone parameters, 154
  descriptions, 184
  details, 167
zones, 18, 20
  flags, 247, 248, 259, 260
  parameters, 167
  stopping the motor, 137
Z-phase signal
  encoder, 468

Revision History

A manual revision code appears as a suffix to the catalog number on the front cover of the manual.

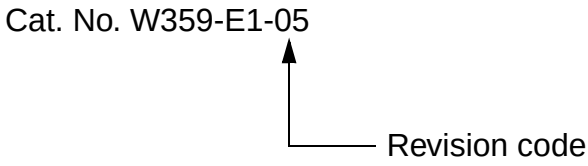

The following table outlines the changes made to the manual during each revision. Page numbers refer to the previous version.

Revision code	Date	Revised content
01	May 1999	Original production
02	July 2003	“Limit signal deceleration method” was changed to “CW/CCW deceleration method” and “initial search direction” was changed to “initial origin search direction” throughout the manual. In addition, the following changes were made. **Pages 4, 5, 6, 16, 17, 61, 66, 84, 86, 407, 408, 411, 427, 457, 458, 471**: Information related to W-series models added. **Page 6**: Changes made to the second and third tables. **Page 24**: Minor change made to information on the external input response time. **Page 48**: Changes made to bottom graphic. **Page 56**: Text added to graphic. **Page 64**: Note added to graphic. **Page 65**: Entire page removed. **Page 70**: Note added under first table. **Page 99**: Sentence added above table. **Pages 119, 303**: Information on driver alarm input added. **Page 130**: Changes made to first table. **Page 131**: Sentence added above table. **Page 135**: Addresses changed in 3 places. **Page 138**: Changes made to bottom 4 rows of table. **Page 139**: Column added to table. **Page 151**: Changes made to bottom row of table. **Page 155**: Changes made to top row of table. **Page 159**: Wording of second note changed. **Pages 160, 238, 299**: Changes made to graphic. **Page 210**: Sentence added above table. **Page 220**: Changes made to sentence under first graphic and content of second graphic. **Page 251**: Sentence and graphic added above table. **Page 254**: Second graphic removed. **Page 302**: Information added under note. **Page 397**: “CW” and “CCW” changed to “+” and “–” respectively. **Page 425**: Changes made to the procedure. **Page 462**: Changes made to information on deceleration stop. **Page 483**: “μs” changed to “ms” in bottom table. **Page 549**: “CW” changed to “–” in one place.
03	March 2004	Extensive corrections and changes to add -V1 models.

Revision code	Date	Revised content
04	February 2008	Added descriptions and corrected mistakes. Added unit version 1.1. Added information for OMNUC G-series Servo Drivers.
05	August 2011	**Page 50**: Corrected content of D+1 in the table. **Pages 114, 115, and 119 to 124**: Added note.

OMRON Corporation **Industrial Automation Company**

Tokyo, JAPAN

Contact: www.ia.omron.com

Regional Headquarters

OMRON EUROPE B.V.
Wegalaan 67-69-2132 JD Hoofddorp
The Netherlands
Tel: (31)2356-81-300/Fax: (31)2356-81-388

OMRON ELECTRONICS LLC
One Commerce Drive Schaumburg,
IL 60173-5302 U.S.A.
Tel: (1) 847-843-7900/Fax: (1) 847-843-7787

OMRON ASIA PACIFIC PTE. LTD.
No. 438A Alexandra Road # 05-05/08 (Lobby 2),
Alexandra Technopark,
Singapore 119967
Tel: (65) 6835-3011/Fax: (65) 6835-2711

OMRON (CHINA) CO., LTD.
Room 2211, Bank of China Tower,
200 Yin Cheng Zhong Road,
PuDong New Area, Shanghai, 200120, China
Tel: (86) 21-5037-2222/Fax: (86) 21-5037-2200

Authorized Distributor:

© OMRON Corporation 1999 All Rights Reserved.
In the interest of product improvement,
specifications are subject to change without notice.

Cat. No. W359-E1-05 0811